Hoisting Equipment

Yale and Pfaff-silberblau hoisting equipment products are reliable and proven equipment renowned world-wide for applications in industry, trade and services.
The comprehensive range includes manual and powered hoisting equipment for a safe lifting and handling of loads ranging from 125 kg to 50000 kg. The products feature a long service life as well as easy and quick maintenance or repair.
Yale and Pfaff-silberblau hoisting equipment products comply with national and international regulations such as the EC Machinery Directive 2006/42/EC and corresponding supplements. In order to meet our high quality standard, the devices are subjected to an overload test in the factory and provided with a test certificate and operating instructions with a declaration of conformity or a manufacturer's declaration.

INFO

Please note our user instructions at the beginning of each chapter.

Table of contents

	Page
Ratchet lever hoists	14 - 30
Hand chain hoists	31 - 49
Corrosion protection	50 - 53
Trolleys & Trolley clamps	54 - 61
Electric & Pneumatic chain hoists	62 - 89
Chains & Accessories	90 - 93
Manual winches	94 - 105
Cable puller & Accessories	106 - 111
Electric winches & Accessories	112 - 127
Rack & Pinion jacks	128 - 147
Crane Systems	148 - 159
Power Supply	160 - 161

Yale

HOISTING EQUIPMENT

INFO

This user information presents a general review regarding the operation of hoisting equipment and does not substitute the existing operating instructions for the specific hoist product.

Lifting operations with hoisting equipment may be carried out by competent users (trained in theory and practice) only.
When operated correctly, our hoist products will offer the highest degree of safety in line with long life expectancy and avoid damage to the product and people.

Modification of delivery condition

Design and construction of the hoist may not be altered, e.g. by installation of outside supplied parts, bending, welding, grinding, removal of safety relevant components like locking devices, locking pins, safety latches etc.

Limitations of operation

Loading

Our hoists have been designed for lifting and transporting of loads. Some models (e.g. ratchet lever hoists) may also be used for pulling and lashing purposes, if admitted in the operating instructions. The indicated capacities refer to loading in straight line and must not be exceeded. Lifting media (e.g. lifting chain or rope) must not be slung over edges and must not be used for the attachment of the load!

Temperature

Hoists may normally be operated at ambient temperatures between -10°C up to +50°C.

These values are approximate and may deviate from the specific givings of the hoist product. The accurate data are given in the current operating instructions. Special models are available on request for higher or lower temperature ranges.

Attention: At temperatures below 0°C the brake should be checked for freezing. (Check lifting function prior to starting work and refer to “Inspection prior to initial operation”).

Shock loading

The indicated capacities are based on shock-free loading of the hoist. Light bumps as occurred during lifting and lowering as well as transporting of load are admitted. Heavier shock loadings, e.g. falling of the load, are strictly forbidden!

Chemicals

Hoists and attachments may not be operated without hesitation in the area of chemicals or chemical vapours – consult our specialists for advice. Hoists which have been subject to chemicals or vapours must be taken out of service and inspected by us.

Transport of people

Transport of people with hoisting equipment is generally forbidden! Transport of people may only by carried out with specially authorized products (e.g. Yaletrac, Mtrac).

Operation in danger zones

Lifting or transport of loads must be avoided while personnel are in the danger zone.
People are not allowed to pass over or under a suspended load.

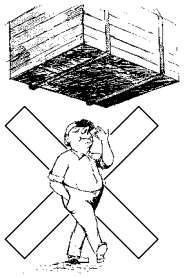

Electrical hazards

Load carrying hoist components (e.g. load chain) must not be subject to electric current and must never be used as a ground connection during welding. Further electrical hazards, e.g. with powered hoists, are indicated in the specific operating instructions!

Electric connections may only be performed by authorized persons resp. companies!

INFO

You will find the General Terms and Conditions at the end of the catalogue.

Please note the information on our training courses on page 4.

Application advices

- Hoists must always be in perfect condition and provided with a legible identity plate.
- Prior to starting work, the hoist including load carrying devices, equipment, supporting structure and suspension must be inspected for obvious deficiencies and failures. In addition, the function of the brake and the correct attachment of hoist and load have to be checked by carrying out a short work cycle of lifting/ pulling or tensioning and releasing.
- Inspect the load chain for sufficient lubrication and visually check for external defects, deformations, superficial cracks, wear or corrosion marks.
  A defective chain must be replaced prior to operation of the hoist.
- Units equipped with two chain falls should be inspected for twisted or kinked chains prior to being put into operation. The chains of multiple fall hoists may be twisted if the bottom block was turned over.

- Inspect top and bottom hooks for deformations, damage, cracks, wear or corrosion marks. A safety latch must be available and work effectively.
- Hoists with obvious defects and units which have been subject to overload or other dangerous influences have to be taken out of service and may only be operated after test and repair if so required.
- When selecting the proper product, make sure that the hoist is suitable to accept transportation, suspension, type of lashing devices and lashing points safely and without unintended movement (e.g. slipping).
- Load chains must not be used in kinked or knotted condition.
- The load must always be seated in the saddle of the hook.
  Never attach the load on the tip of the hook. This applies to top and bottom hooks.

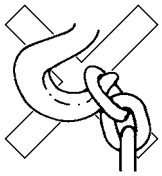

- The operator must ensure that the load is attached in a manner that does not expose himself or other personnel to danger by the hoist, chain(s) or the load.
- During lifting operations the load and suspension hook of the hoist must be perpendicular to the load center to prevent pendle motion of the load!
- The operator may start moving the load only after it has been attached correctly and all personnel are off the danger zone.
- Before lifting make sure that the load can move freely.
- After lifting or tensioning, a load must not be left unattended for a longer period of time.
- Chain stops, slipping clutches etc. are overload protection devices and may not be used as regular load limiters.
- Do not throw the hoist down. Always place it properly on the ground.

INFO

Labelling (Example)

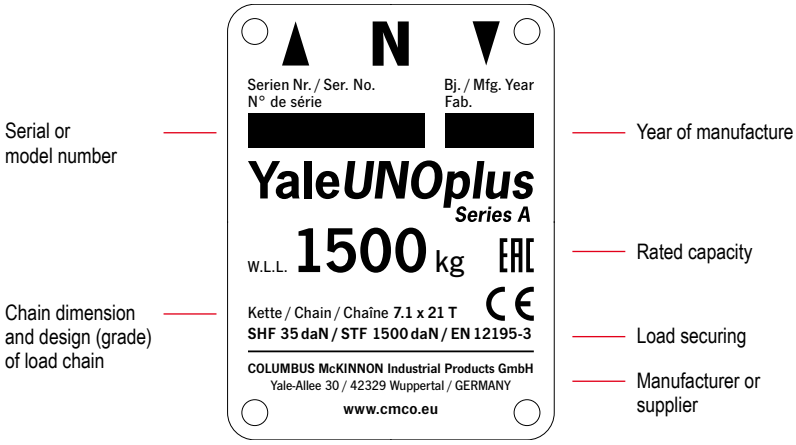

HOIST
yale

Maintenance and repair

- To ensure safe operation, all hoisting equipment must be subjected to regular inspections according to the maintenance instructions given by the manufacturer.
- Hoists which are due for maintenance (normally once per year, unless adverse working conditions dictate shorter periods) or products with obvious defects may be returned to us for inspection and repair.
- Inspections and tests must be performed by competent persons or specialist workshops that use original spare parts!

Inspections

- According to German laws and standards all hoisting equipment must be subjected to a mandatory inspection at least once a year. The inspection must be performed by a competent person.
- On building sites hoists have to be inspected every time before operation.
- Hoist and supporting components have to be cleaned prior to inspection. The cleaning procedure must not cause chemical damages (e.g. no acid-embrittlement). Do not expose the hoist and supporting components to unallowed temperatures by e.g. flame cleaning avoid concealment of cracks and excessive material loss (sand blasting).
  We shall be pleased to consult you in this respect. Please submit your hoists for inspection in clean condition. This will reduce inspection costs considerably!

Criteria for hoist disposal

Hoists must no longer be operated if e.g.:

- The identification (identity plate) is missing or illegible.
- Security relevant components like brake, slipping clutch, ratchet pawls etc. do not properly function any longer.
- Housing, control units and suspension of the hoist present obvious deficiencies, i.e.
  - cuts, grooves, cracks
  - excessive corrosion
  - staining due to heat
  - signs of subsequent welding resp. spatters which cannot be easily removed and leave stains
- Ropes show breakage of wires resp. bruises (criteria for disposal of ropes are given in classification DIN 15020), damages to the rope sleeve and similar failures.
- The load chain presents twisted or distorted links or shows an elongation of 5 % of one chain link or a reduction in diameter of more than 10 % (average of two measurings (longitudinal and transverse) compared to the nominal diameter).
- The opening (C) of suspension and/or load hooks is stretched by more than 10 % compared with the nominal dimension, or if the hook mouth shows a wear of more than 5 % of either dimension B or D.

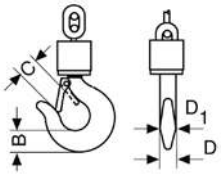

- Detrimental impacts by e.g. overloading, shock loading, chemical influences or heat have occurred, the hoist may only be returned to service after careful inspection and repair.

INFO

C 85
Ratchet lever hoist with roller chain

Capacity 750 - 3000 kg

D 85
Ratchet lever hoist with link chain

Capacity 750 - 10000 kg

Almost unlimited applications in maintenance, mining, construction, steel fabrication, shipbuilding and utility work. Ideal for moving and positioning heavy machines and securing heavy loads, simplifies setting pipes etc. in manholes and trenches.

Features

- Enclosed housing with housing cover, handlever and bottom block made from high tensile white malleable cast iron for overall rugged construction.
- Wet painting colour code RAL 1023.
- The graphite cast iron load sheave for the link chain has precision machined chain pockets for accurate fit and durability of the load chain.
- The roller chain sprocket is made from heat treated chromium-molybdenum steel with precision machined teeth to ensure smooth chain movement.
- Alloyed steel link chain with zinc-plated, in accordance with national and international standards and regulations.

We are pleased to send you our new Atex catalogue in PDF format.

INFO

Since 1936, the Velbert factory has built over 1 million units!

All ratchet lever hoists with a capacity exceeding 750 kg can be used for load attachment according to EN 12195.

Yale hoists and trolleys are not designed for passenger elevation applications and must not be used for this purpose.

Technical data C 85

Model	Art.-No.	Capacity kg	Number of chain falls	Chain dimensions p x b Zoll	Chain dimensions p x b mm	Lift with one full lever turn mm	Handle pull at WLL daN	Weight at standard lift (1.5 m) kg
PUL-LIFT C 85 750	N01141295	750	1	5/8" x 3/8"	15.875 x 9.65	115	38	8.7
PUL-LIFT C 85 1500	N01141296	1500	1	1" x 1/2"	25.4 x 12.7	45	31	17.0
PUL-LIFT C 85 3000	N01141297	3000	1	1 1/4" x 5/8"	31.75 x 15.875	36	40	22.2

Dimensions C 85

Model	PUL-LIFT C 85 750	PUL-LIFT C 85 1500	PUL-LIFT C 85 3000
A min., mm	322	389	403
B, mm	21	27	35
C, mm	27	30	34
D, mm	15	20	25
D1, mm	17	23	25
E, mm	443	443	570
F, mm	112	189	197
G, mm	56	134	142
H, mm	56	55	55
J, mm	142	171	179
K, mm	39	72	76
L, mm	103	99	103

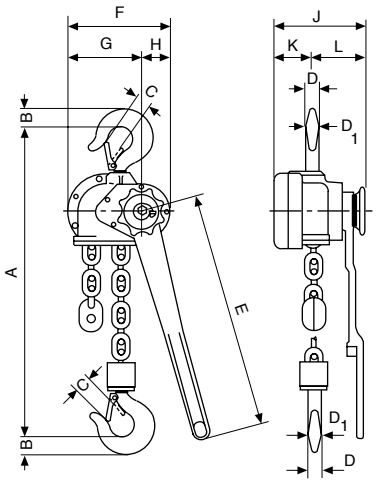

Technical data D 85

Model	Art.-No.	Capacity kg	Number of chain falls	Chain dimensions d x p in mm/ Version	Lift with one full lever turn mm	Handle pull at WLL daN	Weight at standard lift (1.5 m) kg
PUL-LIFT D 85 750	N01541291	750	1	6 x 18.5 - T	111	38	8.2
PUL-LIFT D 85 1500	N01541292	1500	1	9 x 27 - T	45	31	16.3
PUL-LIFT D 85 3000	N01541293	3000	1	11 x 31 - T	33	40	19.6
PUL-LIFT D 85 6000	N01541294	6000	2	11 x 31 - T	17	42	32.9
PUL-LIFT D 85 10000	N01541511	10000	3	11 x 31 - T	11	37	60.0

Dimensions D 85

Model	PUL-LIFT D 85 750	PUL-LIFT D 85 1500	PUL-LIFT D 85 3000	PUL-LIFT D 85 6000	PUL-LIFT D 85 10000
A min., mm	322	389	403	532	805
B, mm	21	27	35	48	61
C, mm	27	30	34	46	54
D, mm	15	20	25	40	40
D1, mm	17	23	25	40	45
E, mm	443	443	570	570	570
F, mm	112	189	197	197	305
G, mm	56	134	142	142	163
H, mm	56	55	55	55	142
J, mm	142	171	179	218	218
K, mm	39	72	76	76	76
L, mm	103	99	103	142	142

Yale*ERGO 360*®

Ratchet lever hoist

Capacity 750 - 9000 kg

Redefining lever-operated hoists, the Yale*ERGO 360*® features the revolutionary crank handle that allows for efficient operation in both lifting and pulling applications. Ergonomically designed for increased safety, the patented Yale*ERGO 360*® lets the operator work up to 12 times faster and with as much as 30 % less pull force than with conventional ratchet lever tools.

Features

- The lightweight, high-strength aluminium housing with powder coating and high-quality bearings offer a long service life even with intensive use and rough operating conditions.
- The hand lever with integrated snap crank ensures ideal power transmission and enables a 360° working range. This increases productivity and reduces the risk of injury.
- Display of the operating direction or free chaining in the viewing window of the hand lever.
- The covered load pressure brake remains free of dirt and moisture, which enables precise load positioning.
- Standard free chaining device to quickly attach the load or to pull the chain through the hoist in both directions.
- Chain guide and stripper are made of robust cast iron and zinc plated to protect against corrosion.
- Alloyed steel link chain with zinc-plated resp. yellow chromated finish, in accordance with national and international standards and regulations.
- Rotatable, forged top and load hooks and casted safety latches provide reliable and safe load suspension. The screwed top hook cross bars and bottom blocks are allowed for easy maintenance.

Optional

- All Yale*ERGO 360*® units can be equipped with an overload protection device in the form of a slip clutch which is factory preset to approx. 25 % ± 15 % overload.
- Shipyard hooks available for 1500 kg and 3000 kg units.

DESIGN AWARD 2018

PATENTED

HAND LEVER WITH RETRACTABLE CRANK

DESIGNED FOR OPTIMAL EFFICIENCY & SAFETY

Capacity
750 kg

Shortest hook space (A min.) 320 mm

Handle pull at WLL crank lever handle operation 20 daN

Weight 6.7 kg

Capacity
1500 kg

Shortest hook space (A min.) 375 mm

Handle pull at WLL crank lever handle operation 24 daN

Weight 9.6 kg

Capacity
3000 kg

Shortest hook space (A min.) 445 mm

Handle pull at WLL crank lever handle operation 35 daN

Weight 17.2 kg

Capacity
6000 kg

Shortest hook space (A min.) 563 mm

Handle pull at WLL crank lever handle operation 37 daN

Weight 28.9 kg

Capacity
9000 kg

Shortest hook space (A min.) 695 mm

Handle pull at WLL crank lever handle operation 41 daN

Weight 49.5 kg

When folded out, the lever handle can serve as a carrying grip for easy transport. Simply attach the end stop to the hook and slip the hook onto the crank handle.

Unique body design allows the Yale*ERGO 360*® to lay flat to minimize tipping or slipping during operation.

The Yale*ERGO 360*® in conventional use.

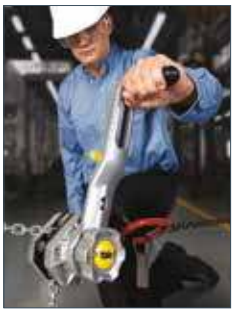

The Yale*ERGO 360*® in use of the extended crank handle.

DISTINCTIVE (((CLICKING SOUND)))

ENSURES THE HANDLE IS LOCKED INTO POSITION

To return handle to upright position, simply pull the handle outward and snap into place inside the lever.

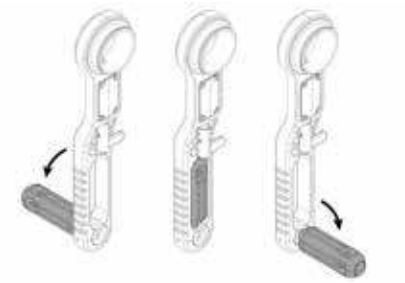

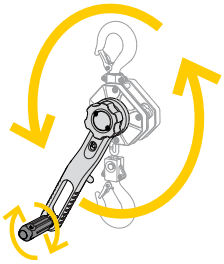

The hand lever with integrated crank

- 360° rotation increases efficiency, allowing operators to work up to 12 times faster than with a conventional ratchet lever hoist.
- Requires 30 % less pull force to operate.
- Easy and effective operation from any angle with handle that folds down and locks into position on either side of the lever.
- Design keeps the operator's body aligned with the load chain, reducing the risk of the twist effect – when a hoist twists around the chain.
  No need to use a second hand to stabilize the hoist.
- Operator can securely grip the grooved, no-slip handle.
- Crank handle made of durable polyamide with a heavy-duty steel core for rugged use.

SAFE & SECURE

SELECTOR LEVER LOCKS IN PLACE TO PREVENT ACCIDENTALLY SWITCHING.

Pull down on the selector lever to unlock it, turn it to the desired direction, and release it into the locking position.

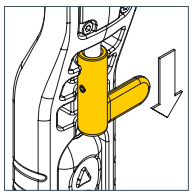

Convenient directional indicator

Easy-to-use, highly visible directional indicator window located in the handle clearly shows the operating direction as LIFTING (▲), LOWERING (▼) or NEUTRAL (**N**).

Simple & smooth free chaining device

Quick positioning of the unloaded chain - even with one-handed operation.

In this operating mode, the chain can be pulled through the unit by hand in both directions in order to attach it more quickly.

The free chaining device is activated by moving (shifting) the lever to the neutral position (**N**).

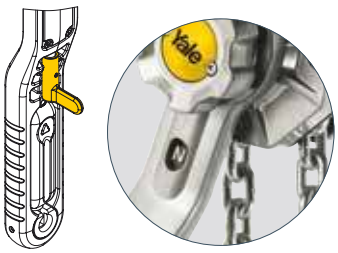

Technical data Yale*ERGO 360®*

Model	Art.-No.	Capacity kg	Number of chain falls	Chain dimensions d x p in mm/ design	Lift with one full lever turn mm	Handle pull at WLL daN	Handle pull at WLL with crank daN	Weight at standard lift (1.5 m) kg
Yale*ERGO 360* 750	192028204	750	1	5.6 x 17.1 - T	27.2	21	20	6.7
Yale*ERGO 360* 1500	192028202	1500	1	7.1 x 21 - T	21.7	31	24	9.6
Yale*ERGO 360* 3000	192028553	3000	1	10 x 28 - V	20.1	43	35	17.2
Yale*ERGO 360* 6000	192035451	6000	2	10 x 28 - V	10.1	46	37	28.9
Yale*ERGO 360* 9000	192039362	9000	3	10 x 28 - V	6.7	50	41	49.5

Dimensions Yale*ERGO 360®*

Model	Yale*ERGO 360* 750	Yale*ERGO 360* 1500	Yale*ERGO 360* 3000	Yale*ERGO 360* 6000	Yale*ERGO 360* 9000
A min., mm	320	375	445	563	695
B, mm	20	26	37	45	68
C, mm	27	31	40	47	68
D, mm	18	21	28	35	50
E, mm	327	327	377	377	377
F, mm	300	300	350	350	350
G, mm	40	51	57	71	116
H, mm	81	96	123	162	199
J, mm	121	147	180	233	315
K, mm	56	69	86	86	86
L, mm	105	110	121	121	121
M, mm	161	179	207	207	207
N, mm	30	30	30	30	30
O, mm	120	120	120	120	120
P, mm	257	273	299	299	299

Optional:

Shipyard hooks
for capacities 1500 and 3000 kg.

Based on a special design the shipyard hooks can be fixed to avoid slipping (resp. on steel plates which were braced for welding).

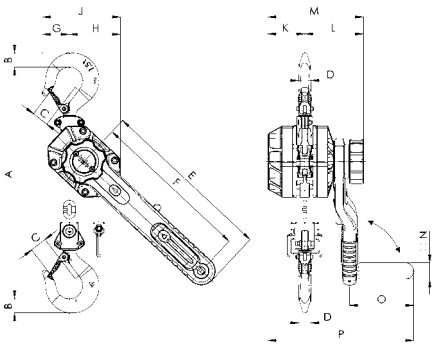

Yale*ERGO 360®*, 750 - 3000 kg, single fall

360°

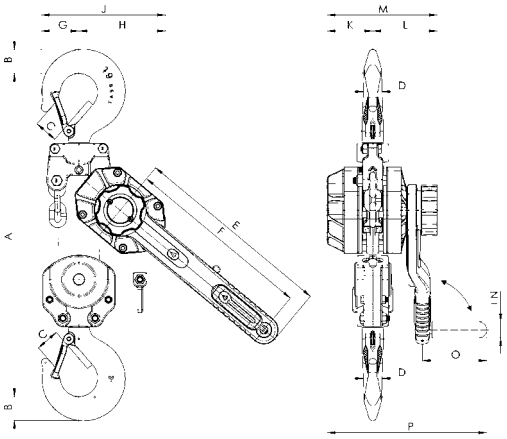

Yale*ERGO 360®*, 6000 kg, double fall

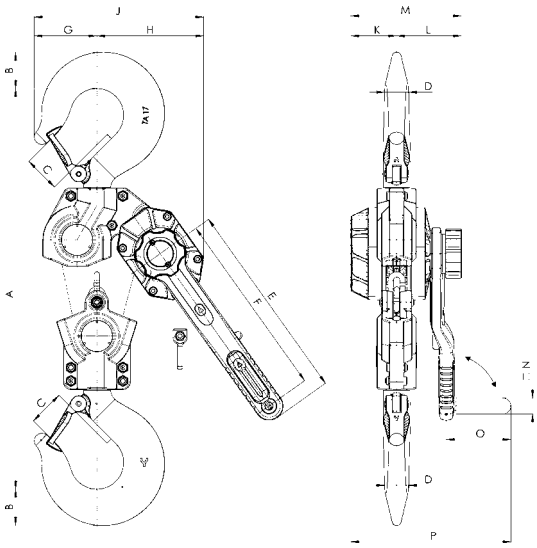

Yale*ERGO 360®*, 9000 kg, three fall

Yale*ERGO 360® UT* *Utility!*

Ratchet lever hoist with safety gear

Capacity 1500 - 9000 kg

The Yale*ERGO 360® UT* is now also redefining the world of hoists for overhead line construction. The automatically acting safety gear, with a pending patent, once more increases the safety of use.
Here, too, the ergonomic and safety enhancing design of the device and the revolutionary, patented hand lever enable efficient work at any angle, for lifting and pulling applications.

Features

AUTOMATICALLY ACTING SAFETY GEAR

The Yale*ERGO 360® UT* has a unique, automatically locking safety device to prevent a sudden drop (patent pending). It guarantees permanent monitoring and is active during operation as well as during inactive moments without the user having to activate it.
In case of emergency, i.e. after failure of the load pressure brake and consequently exceeding the specified speed, the safety gear will automatically activate.
It safely absorbs the load, preventing the creation of larger dynamic forces which could cause further damage. Due to its design, the device remains in a safe state even in the event of an error (e.g. rusted ratchet pawl, broken springs or other influences such as basic corrosion or dirt).

EXCELLENT CORROSION PROTECTION

A housing optimized for outdoor applications (incl. water drainage holes on all sides) prevents a build up of water and the influence of moisture in extreme conditions (e.g. rain, fluctuations in temperature). External components such as the chain guide and the stripper are zinc plated. Some of the internal moving parts such as the drive pinion, the ratchet pawl, the load chain wheel and the ratchet are MKS coated (zinc flake coating).

Optional

CHAIN STOP & CHAIN CLAW*

Optionally, the devices can be equipped with our proven and tested YKST chain stop or the KKL chain claw.

*The usage is based on each country's specific regulations.

DGUV Test
HM 230021
Sicherheit geprüft
tested safety
dguv.de/pruefzeichen

PATENTED
AUTOMATICALLY ACTING SAFETY GEAR
DESIGNED FOR OPTIMAL EFFICIENCY & SAFETY
In accordance with EN 1808 -
Safety requirements for suspended access equipment, 8.9.2

In cooperation with BGHM Berufsgenossenschaft Holz und Metall and BG ETEM Energie Textil Elektro Medienerzeugnisse

Extract from BG ETEM statement:

"This is to confirm that the integrated safety gear in the ratchet lever hoist Yale*ERGO 360® UT* makes organizational measures such as the parallel use of several devices, the additional insertion of slings or the use and repositioning of an additional chain stopper obsolete.

In accordance with the S-T-O-P principle, the additional safety gear represents a technical solution that is superior to the organizational solutions used to date."

Yale ERGO 360® UT *Utility!*

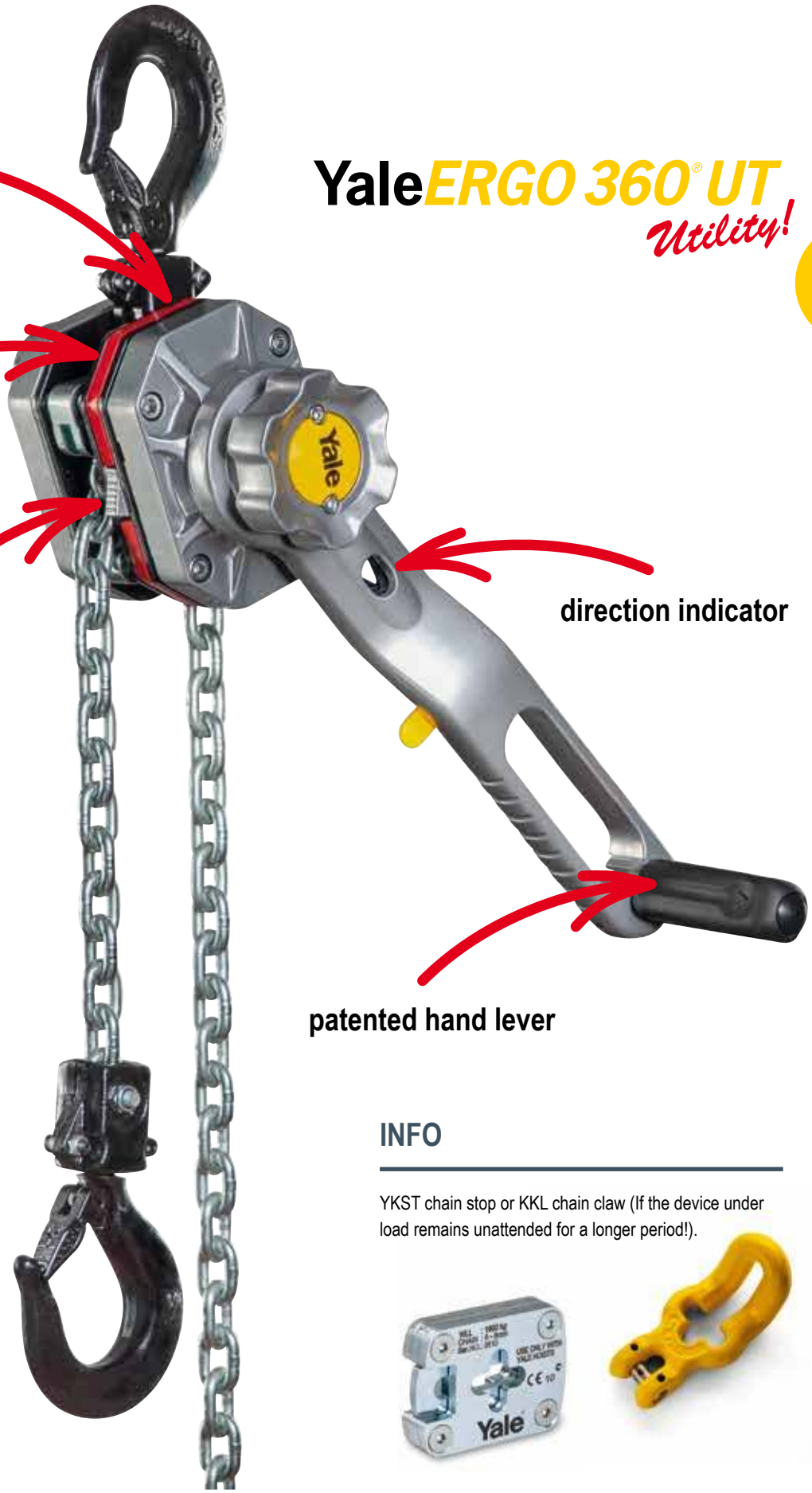

drain holes on all sides of the housing prevent standing water and moisture

automatically acting safety gear

push button to fully reset the safety gear

direction indicator

patented hand lever

INFO

YKST chain stop or KKL chain claw (If the device under load remains unattended for a longer period!).

STRUCTURE & FUNCTIONALITY OF THE AUTOMATIC SAFETY GEAR

PATENTED

AUTOMATICALLY ACTING SAFETY GEAR

DESIGNED FOR OPTIMAL EFFICIENCY & SAFETY

In accordance with EN 1808 -
Safety requirements for suspended access equipment, 8.9.2

REQUIREMENTS FOR THE REDUNDANT SAFETY GEAR in accordance with EN 1808 - Safety requirements for suspended access equipment, 8.9.2

- shall automatically engage in the event of overspeed (more than 0.5 m/s)
- the stopping distance must not exceed 500 mm
- shall be capable of being reset
- shall be capable of being tested
- shall permit lifting at any time

FUNCTION NORMAL OPERATION

Speed < 0.5 m/s

The rocker pawl moves continuously along the contours of the cam disc and lock disc.

FUNCTION ABSORPTION

Speed > 0.5 m/s

As soon as the speed exceeds 0.5 m/s, the rocker pawl engages the lock disc and safely absorbs the load.

INFO

In any cases the load is caught exceeding a speed of 0.5 m/s.

Speeds below 0.5 m/s (corresponds to 2 km/h) are not safety relevant according to EN 1808.

Extensive corrosion protection measures of the individual components ensure the proper functioning of the safety gear even during long-term use under poor weather conditions.

Overhead line construction

Aerial construction

Technical data Yale*ERGO 360® UT*

Model	Art.-No.	Capacity kg	Number of chain falls	Chain dimensions d x p in mm/ design	Lift with one full lever turn mm	Handle pull at WLL daN	Handle pull at WLL with crank daN	Weight at standard lift (1.5 m) kg
Yale*ERGO 360 UT* 1500	192069625	1500	1	7.1 x 21 - T	21.7	31	24	9.8
Yale*ERGO 360 UT* 3000	192069671	3000	1	10 x 28 - V	20.1	43	35	18.1
Yale*ERGO 360 UT* 6000	192071416	6000	2	10 x 28 - V	10.1	46	37	29.8
Yale*ERGO 360 UT* 9000	192083321	9000	3	10 x 28 - V	6.7	50	41	50.4

Dimensions Yale*ERGO 360® UT*

Model	Yale*ERGO 360 UT* 1500	Yale*ERGO 360 UT* 3000	Yale*ERGO 360 UT* 6000	Yale*ERGO 360 UT* 9000
A min., mm	375	445	563	695
B, mm	26	37	45	68
C, mm	31	40	47	68
D, mm	21	28	35	50
E, mm	327	377	377	377
F, mm	300	350	350	350
G, mm	51	57	71	116
H, mm	96	123	162	199
J, mm	147	180	233	315
K, mm	69	86	86	86
L, mm	124	136	136	136
M, mm	193	222	222	222
N mm	30	30	30	30
O, mm	120	120	120	120
P, mm	287	314	314	314

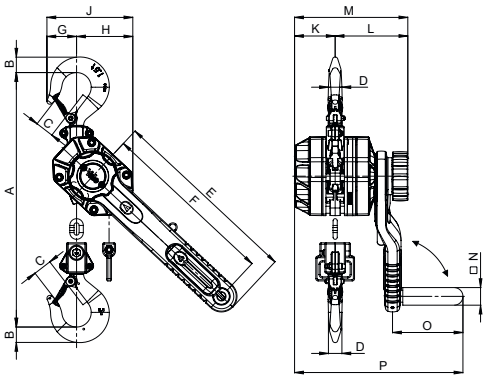

Yale*ERGO 360® UT*, 1500 - 3000 kg, single fall

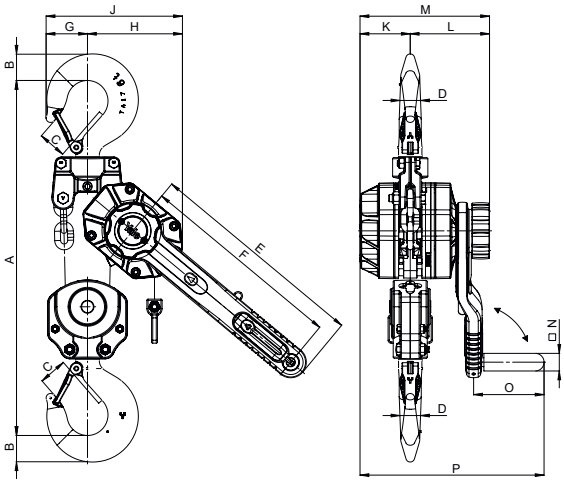

Yale*ERGO 360® UT*, 6000 kg, double fall

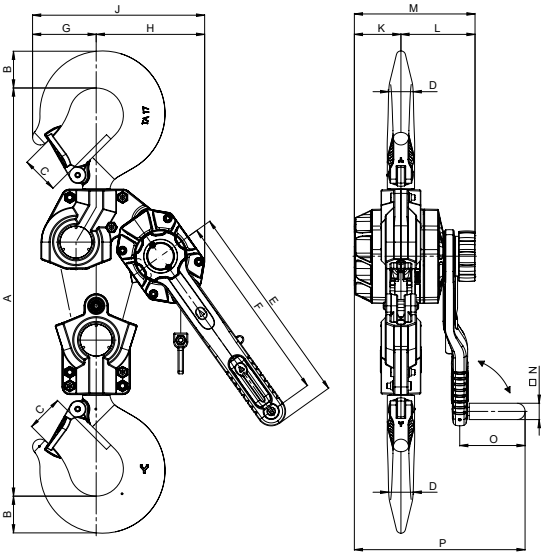

Yale*ERGO 360® UT*, 9000 kg, three fall

Construction of contact lines

Cable car construction

Positioning of loads

AL Ratchet lever hoist

Capacity 750 - 3000 kg

Its low own weight is an advantage. When the hoist has to be frequently carried over longer distances to different assignments. This universal ratchet hoist should not be missing in any service truck.

Features

- The enclosed housing, hand lever and hand wheel are made from high quality aluminium.
- Low effort on hand lever.
- Due to precise needle bearings the hoist can be operated with little effort.
- Standard free chaining device to quickly attach the load or to pull the chain through the hoist in both directions.
- The chain guide is cast into the body to ensure fault-less chain movement.
- Alloyed steel link chain with zinc-plated resp. yellow chromated finish, in accordance with national and international standards and regulations.

INFO

All ratchet lever hoists with a capacity exceeding 750 kg can be used for load attachment according to EN 12195.

Yale hoists and trolleys are not designed for passenger elevation applications and must not be used for this purpose.

Technical data AL

Model	Art.-No.	Capacity kg	Number of chain falls	Chain dimensions d x p in mm/ design	Lift with one full lever turn mm	Handle pull at WLL daN	Weight at standard lift (1.5 m) kg
AL 750	N02041251	750	1	6.3 x 19.1 - T	30	20	6.4
AL 1000	N02041252	1000	1	6.3 x 19.1 - T	30	22	6.6
AL 1500	N02041253	1500	1	7.1 x 21.2 - T	16	21	10.0
AL 3000	N02041254	3000	1	10 x 30.2 - T	14	28	18.0

Dimensions AL

Model	AL 750	AL 1000	AL 1500	AL 3000
A min., mm	315	325	380	455
B, mm	20	23	27	36
C, mm	22	23	26	33
D, mm	14	16	20	24
E, mm	300	300	300	400
F, mm	106	109	138	168
G, mm	47	47	60	75
H, mm	59	62	78	93
J, mm	154	154	177	212
K, mm	49	49	74	94
L, mm	105	105	103	118

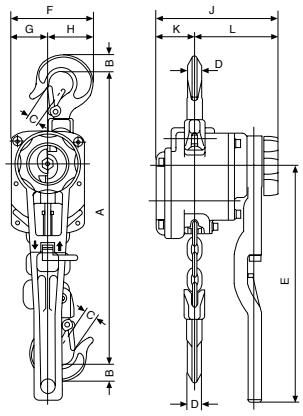

Yale*UNOplus* *Series A*

Ratchet lever hoist

Capacity 750 - 6000 kg

The *UNOplus - Series A* ratchet lever hoist is the result of further technical development of the *UNOplus*, which has proven itself over many years.
The versatile tool for lifting, pulling and securing of loads is characterised by its compact design, robust stamped steel construction and the smoothly running free chaining device. The further reduced weight optimizes operation, makes the application even more comfortable and the UNOplus - Series A to a convenient, versatile device.

Features

- Due to optimized gearing and improved bearings in the housing cover a minimum effort is required to operate the short hand lever.
- Automatic screw-and-disc type load brake with corrosion protected components.
- Standard free chaining device to quickly attach the load or to pull the chain through the hoist in both directions.
- Robust chain guide rollers eliminate fouling and jamming of chain on the load sheave.
- Robust chain end stop
- Comfortable rubber grip provides for extra protection against slippage.
- Alloyed steel link chain with zinc-plated resp. yellow chromated finish, in accordance with national and international standards and regulations.
- Forged suspension and load hooks are made from non-aging, high tensile steel and fitted with robust safety latches.

COMPACT & TRANSPORTABLE

UNIVERSALLY USABLE & USER FRIENDLY

LIGHTWEIGHT & CAN BE USED IN THE SMALLEST AREAS.

INFO

All ratchet lever hoists with a capacity exceeding 750 kg can be used for load attachment according to EN 12195.

Yale hoists and trolleys are not designed for passenger elevation applications and must not be used for this purpose.

We are pleased to send you our new Atex catalogue in PDF format.

Technical data *UNOplus-A*

Model	Art.-No.	Capacity kg	Number of chain falls	Chain dimensions d x p in mm/ design	Lift with one full lever turn mm	Handle pull at WLL daN	Weight at standard lift (1.5 m) kg
***UNOplus-A* 750**	192049841	750	1	5.6 x 17.1 - T	27	22	6.3
***UNOplus-A* 1500**	192049940	1500	1	7.1 x 21 - T	22	35	9.2
***UNOplus-A* 3000**	192050025	3000	1	10 x 28 - V	20	40	16.9
***UNOplus-A* 6000**	192050579	6000	2	10 x 28 - V	10	43	28.6

Dimensions *UNOplus-A*

Model	***UNOplus-A* 750**	***UNOplus-A* 1500**	***UNOplus-A* 3000**	***UNOplus-A* 6000**
A min., mm	312	375	445	563
B, mm	20	26	37	45
C, mm	27	31	40	47
D, mm	18	21	28	35
E, mm	267	267	376	376
F, mm	121	146	180	232
G, mm	40	51	57	71
H, mm	81	95	123	161
J, mm	144	164	193	193
K, mm	53	68	83	83
L, mm	91	96	110	110

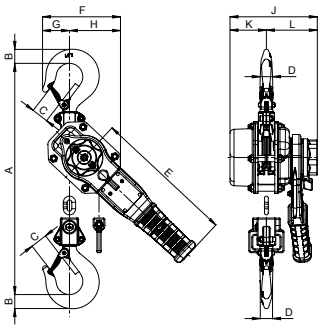

UNOplus-A, 750 - 3000 kg, single fall

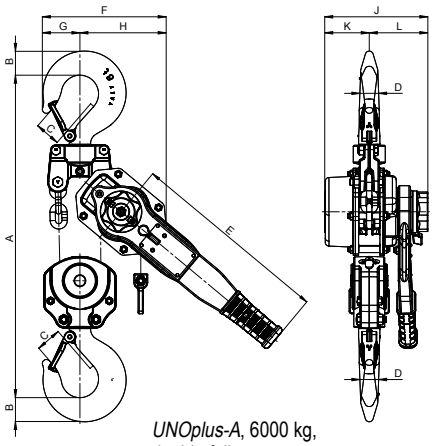

UNOplus-A, 6000 kg, double fall

Yale*UNOplus*

ARCTIC EDITION ***Series A***

Ratchet lever hoist

Capacity 750 - 6000 kg

With the Yale *ARCTIC EDITION* the field of application of the tried and tested Yalelift 360 manual hand chain hoist can now be expanded to applications under extreme low temperatures.

Care was taken to ensure that all functions, especially its innovative 360° hand chain guide, function optimally and safely even under extreme temperatures. The materials and lubricants used were adapted to the requirements and tested and certified in complex low-temperature test procedures.

This allows the user to work safely and productively with the Yalelift 360 even at temperatures down to -40°C, whereas standard hoists without these measures may only be used down to -20°C (DIN EN13157 Cranes - Safety - hand-operated cranes).

In addition to static tests, dynamic low-temperature tests were also carried out to rule out malfunctions and material failure.

We can confirm the user's suitability with a certificate.

TESTED APPROVED -40°C

INFO

Standard hoists according to EN13157
(cranes - safety - hand operated cranes)

5.1.12 Temperature
Hand chain blocks and their components shall be capable of operating within an ambient temperature range of -10°C to +50°C unless another temperature range is agreed between the manufacturer and the purchaser. Standard hoist products from CMCO are suitable for a temperature range of -20°C to +50°C!

Technical data *UNOplus-A ARCTIC EDITION*

Model	Art.-No.	Capacity kg	Number of chain falls	Chain dimensions d x p in mm/ design	Lift with one full lever turn mm	Handle pull at WLL daN	Weight at standard lift (1.5 m) kg
UNOplus-A* 750 *ARCTIC EDITION	192099226	750	1	5.6 x 17.1 - T	27	22	6.3
UNOplus-A* 1500 *ARCTIC EDITION	192099227	1500	1	7.1 x 21 - T	22	35	9.2
UNOplus-A* 3000 *ARCTIC EDITION	192099228	3000	1	10 x 28 - V	20	40	16.9
UNOplus-A* 6000 *ARCTIC EDITION	192099229	6000	2	10 x 28 - V	10	43	28.6

Dimensions *UNOplus-A ARCTIC EDITION*

Model	***UNOplus-A* 750 *ARCTIC EDITION***	***UNOplus-A* 1500 *ARCTIC EDITION***	***UNOplus-A* 3000 *ARCTIC EDITION***	***UNOplus-A* 6000 *ARCTIC EDITION***
A min., mm	312	375	445	563
B, mm	20	26	37	45
C, mm	27	31	40	47
D, mm	18	21	28	35
E, mm	267	267	376	376
F, mm	121	146	180	232
G, mm	40	51	57	71
H, mm	81	95	123	161
J, mm	144	164	193	193
K, mm	53	68	83	83
L, mm	91	96	110	110

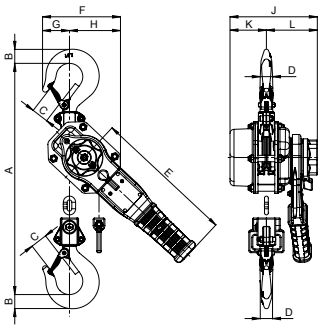

UNOplus-A ARCTIC EDITION,
750 - 3000 kg, single fall

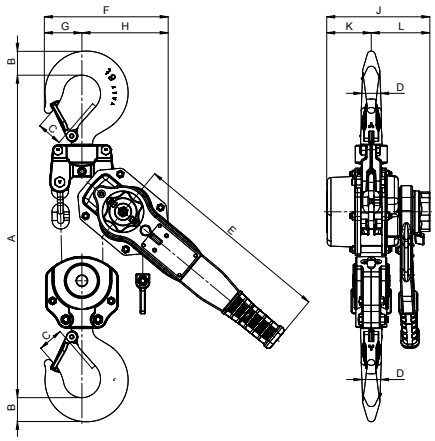

UNOplus-A ARCTIC EDITION,
6000 kg, double fall

COMPACT & TRANSPORTABLE

UNIVERSALLY USABLE & USER FRIENDLY

LIGHTWEIGHT & CAN BE USED IN THE SMALLEST AREAS.

Yale*handy*

Ratchet lever hoist

Capacity 250 - 500 kg

The extreme low own weight and the very compact design make the hoist easy to use even in confined working conditions. Due to the multitude of application possibilities e.g. in industry, trade and service this ratchet lever hoist is indispensable.

Features

- The enclosed design protects the internal parts from contamination.
- The short handlever is fitted with an ergonomic rubber grip.
- All parts of the disc type load brake are manufactured from high quality materials and are corrosion protected.
- Standard free chaining device to quickly attach the load or to pull the chain through the hoist in both directions.
- Alloyed steel link chain with zinc-plated resp. yellow chromated finish, in accordance with national and international standards and regulations.
- Forged suspension and load hooks are made from non-aging, high tensile steel and fitted with robust safety latches.

INFO

Yale hoists and trolleys are not designed for passenger elevation applications and must not be used for this purpose.

Technical data Yalehandy

Model	Art.-No.	Capacity kg	Number of chain falls	Chain dimensions d x p in mm/ design	Lift with one full lever turn mm	Handle pull at WLL daN	Weight at standard lift (1.5 m) kg
Yalehandy 250	N02300018	250	1	4 x 12 - T	80	25	2.2
Yalehandy 500	N02300070	500	1	4 x 12 - V	40	25	2.8

Dimensions Yalehandy

Model	Yalehandy 250	Yalehandy 500
A min., mm	240	282
B, mm	20	17
C, mm	21	24
D, mm	14	12
E, mm	160	160
F, mm	72	104
G, mm	33	38
H, mm	39	66
J, mm	98	116
K, mm	21	36
L, mm	77	80

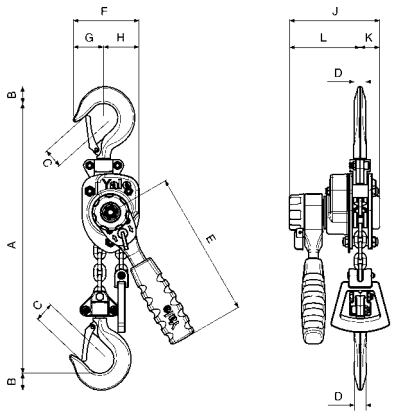

INFO

All ratchet lever hoists with a capacity exceeding 750 kg can be used for load attachment according to EN 12195.

Yale hoists and trolleys are not designed for passenger elevation applications and must not be used for this purpose.

Silverline HZ S
Ratchet lever hoist

Capacity 750 - 6000 kg

The Silverline HZ S is designed and built for safe and efficient operation.
A hoist with low maintenance - at an economical price.

Features

- Strong bolts between side plates and housing cover ensure increased stability.
- Chain guide rollers eliminate fouling and jamming of chain.
- Bearings for side plates permit a long service life.
- Zinc-plated load chain as standard.
- Forged suspension and load hooks are made from high tensile steel and fitted with safety latches.

Technical data Silverline HZ S

Model	Art.-No.	Capacity kg	Number of chain falls	Chain dimensions d x p in mm/ design	Lift with one full lever turn mm	Handle pull at WLL daN	Weight at standard lift (1.5 m) kg
HZ S 750	N02300113	750	1	6 x 18 - T	20	20	7.0
HZ S 1500	N02300114	1500	1	8 x 24 - T	10	36	10.0
HZ S 3000	N02300115	3000	1	10 x 30 - T	17	38	18.0
HZ S 6000	N02300116	6000	2	10 x 30 - T	9	39	27.0

Dimensions Silverline HZ S

Model	HZ S 750	HZ S 1500	HZ S 3000	HZ S 6000
A min., mm	330	410	490	640
B, mm	24	30	45	55
C, mm	26	31	34	46
D, mm	14	18	26	37
E, mm	280	410	410	410
F, mm	111	175	190	240
G, mm	33	50	60	80
H, mm	78	125	130	160
J, mm	142	180	195	200
K, mm	55	75	85	90
L, mm	87	105	110	110

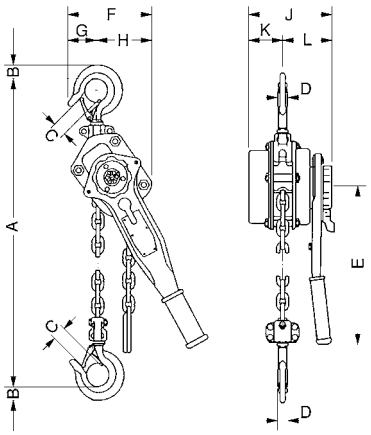

Silverline Stira S
Hand chain hoist

Capacity 500 - 5000 kg

The hand chain run is just as smooth as on the models Yale*lift 360* and VS*III*, but the Silverline Stira S series is a low-priced alternative to the high-quality units.

Features

- Strong bolts between side plates and housing cover ensure increased stability.
- Chain guide rollers eliminate fouling and jamming of chain.
- The design prevents the hand chain from jamming and jumping off.
- Bearings for side plates permit a long service life.
- Zinc-plated load chain as standard.
- Forged suspension and load hooks are made from high tensile steel and fitted with safety latches.

INFO

Yale hoists and trolleys are not designed for passenger elevation applications and must not be used for this purpose.

Technical data Silverline Stira S

Model	Art.-No.	Capacity kg	Number of chain falls	Chain dimensions d x p in mm/ design	Lift per 1 m hand chain overhaul mm	Handle pull at WLL daN	Weight at standard lift (3 m) kg
Stira S 500	N04500041	500	1	6 x 18 - T	29	23	12.0
Stira S 1000	N04500042	1000	1	6 x 18 - T	27	31	14.0
Stira S 1500	N04500043	1500	1	8 x 24 - T	20	32	19.0
Stira S 2000	N04500044	2000	1	8 x 24 - T	15	36	21.0
Stira S 3000	N04500045	3000	2	8 x 24 - T	5	34	27.0
Stira S 5000	N04500046	5000	2	10 x 30 - T	3	41	43.0

Dimensions Silverline Stira S

Model	Stira S 500	Stira S 1000	Stira S 1500	Stira S 2000	Stira S 3000	Stira S 5000
A min.	270	317	399	414	465	636
B	18	23	28	28	35	46
C	30	34	38	41	48	52
D	13	16	20	23	27	35
E	127	158	174	187	199	253
F	131	140	161	161	161	186
G	74	77	82	84	82	93
H	57	63	79	77	79	91
K	220	250	280	300	310	400

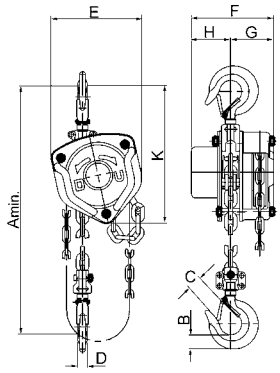

Silverline Stira S
500 - 2000 kg, single fall

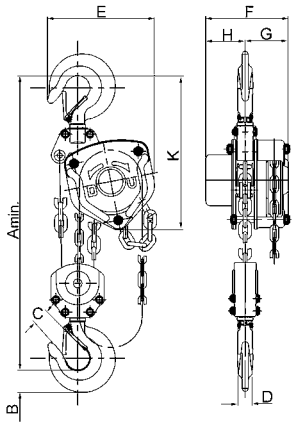

Silverline Stira S
3000 - 5000 kg, double fall

Yale *VS III*

Hand chain hoist

Capacity 250 - 5000 kg

Extremely low overall height allows optimal use of available headroom. Fully enclosed stamped steel housing allows also outdoor use. The improved hand chain guide prevents canting or jamming of the hand chain, leading to a smooth running of the chain. High quality bearings on side plates, gearbox and load chain sheave ensure smooth operation of load chain and drive pinion. Optimized hand forces set standards for easy operation. The hooks are equipped with robust safety latches and can rotate 360°.

Features

- Strong bolts between side plates and housing cover and the reinforced hand wheel cover ensure increased stability.
- Precision machined guide rollers ensure smooth running of the load chain.
- High quality bearings for gearbox, side plates and load chain sheave permit a long service life.
- Zinc-plated and yellow-chromated brake parts and guide rollers ensure increased corrosion protection.
- Zinc-plated load chain as standard for added corrosion protection.

Optional

- Overload protection device (from 500 kg available)
- Chain container

Load chain sheave with needle bearing

Side plate with ball bearing

Housing cover with ball bearing

Yale *VS III*

Hand chain hoist

Capacity 10000 - 50000 kg

Having long years of experience with this solid product, we decided to extend the VS*III* series by the load capacities 10 t, 20 t, 30 t and 50 t.

In order to serve all industries (even the paper- or the ship industry), the VSIII lifts the loads very sensitively, as the components and construction parts have been positioned very precisely.

Features

- Strong bolts between side plates and housing cover and the reinforced hand wheel cover ensure increased stability.
- Precision machined guide rollers ensure smooth running of the load chain.
- High quality bearings for gearbox, side plates and load chain sheave permit a long service life.
- Zinc-plated and yellow-chromated brake parts and guide rollers ensure increased corrosion protection.
- Zinc-plated load chain as standard for added corrosion protection.

Optional

- Overload protection device
- Chain container on request

SERIES EXTENSION

NOW WITH HIGH SWL!

30000 - 50000 kg

INFO

To avoid bruising or injuries, the chain inlet as well as the top hook connection is covered in protective material.

Technical data VS*III*

Model	Art.-No.	Capacity in kg/ Number of chain falls	Chain dimensions d x p in mm/ design	Lift per 1 m hand chain overhaul mm	Handle pull at WLL daN	Weight at standard lift (3 m) kg
VS*III* 0,25/1	N04200123	250/1	4 x 12 - T	50	20	4.9
VS*III* 0,5/1	N04200124	500/1	5 x 15 - T	26	21	9.0
VS*III* 1,0/1	N04200125	1000/1	6 x 18 - T	24	24	11.5
VS*III* 1,5/1	N04200134	1500/1	8 x 24 - T	17	30	17.5
VS*III* 2,0/1	N04200126	2000/1	8 x 24 - T	19	32	19.0
VS*III* 2,0/2	N04200127	2000/2	6 x 18 - T	15	29	17.3
VS*III* 3,0/1	N04200128	3000/1	10 x 30 - T	12	40	31.0
VS*III* 3,0/2	N04200129	3000/2	8 x 24 - T	10	37	27.0
VS*III* 5,0/2	N04200130	5000/2	10 x 30 - T	8	41	43.0
VS*III* 10/4	192039383	10000/4	10 x 30 - T	2.84	37	78.5
VS*III* 20/8	192039384	20000/8	10 x 30 - T	1.42	44.5	197
VS*III* 30/12	192039385	30000/12	10 x 30 - T	0.83	46.3	268
VS*III* 50/18	192039386	50000/18	10 x 30 - T	0.56	53.6	540

Dimensions VS*III*

Model	VS*III* 0,25/1	VS*III* 0,5/1	VS*III* 1,0/1	VS*III* 1,5/1	VS*III* 2,0/1	VS*III* 2,0/2	VS*III* 3,0/1	VS*III* 3,0/2	VS*III* 5,0/2	VS*III* 10/4	VS*III* 20/8	VS*III* 30/12	VS*III* 50/18
A min., mm	290	350	380	450	460	490	570	580	700	860	950	1112	1700
B, mm	12	21	27	33	37	37	46	46	56	63	90	90	165
C, mm	26	28	32	37	41	41	44	44	50	65	86	85	135
D, mm	11	16	19	22	27	27	31	31	37	47	69	67	108
E, mm	118	145	158	180	205	170	240	220	250	463	860	704	776
F, mm	113	140	155	175	180	155	210	175	190	104	200	410	627
G, mm	65	80	87	85	94	87	110	94	95	55	100	225	314
H, mm	48	60	68	90	86	68	100	81	95	50	100	186	314
K, mm	190	240	270	300	320	285	370	340	410	448	508	528	656

INFO

Yale hoists and trolleys are not designed for passenger elevation applications and must not be used for this purpose.

Optional: Chain container

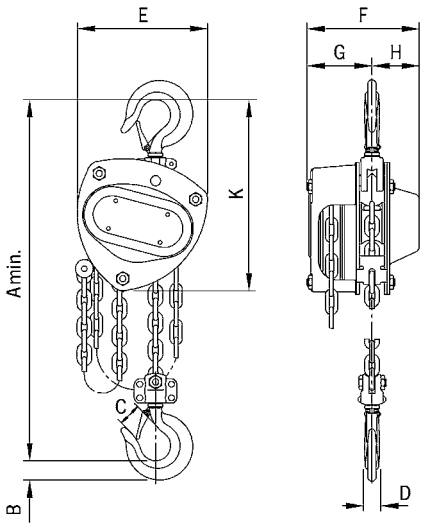

VS*III*, 250 - 3000 kg, single fall

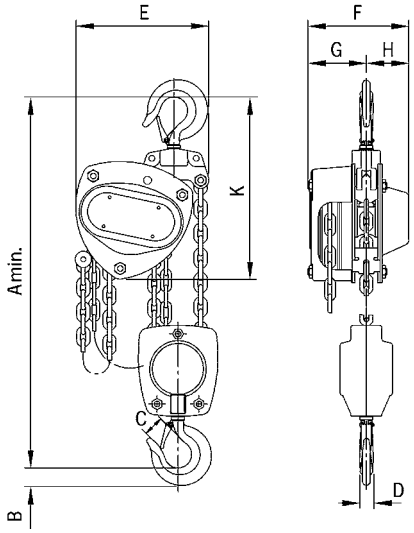

VS*III*, 2000 - 5000 kg, double fall

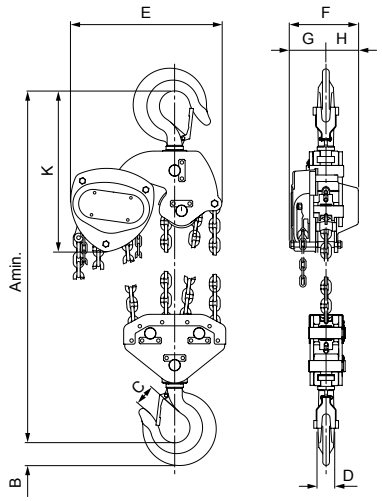

VS*III*, 10000 kg, four chain falls

INFO

HTG trolleys for hand chain hoists upwards 10000 kg please see pages 54 - 57.

SERIES EXTENSION

NOW WITH HIGH SWL!

30000 - 50000 kg

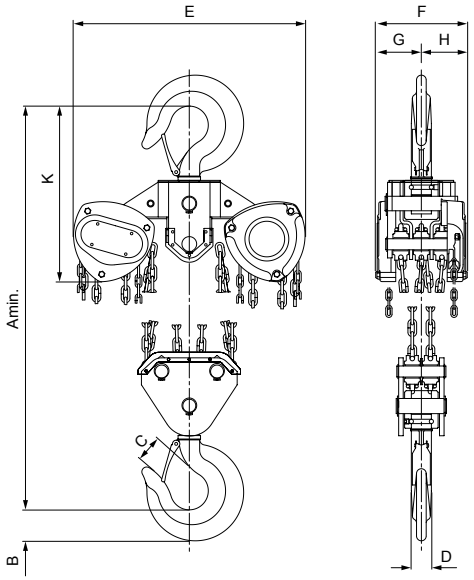

VS*III*, 20000 kg, eight chain falls

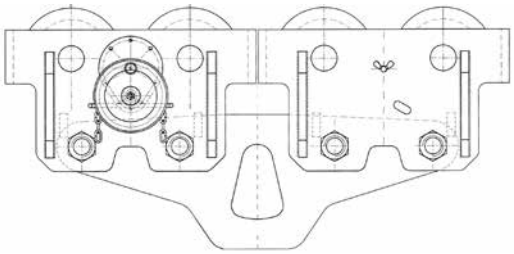

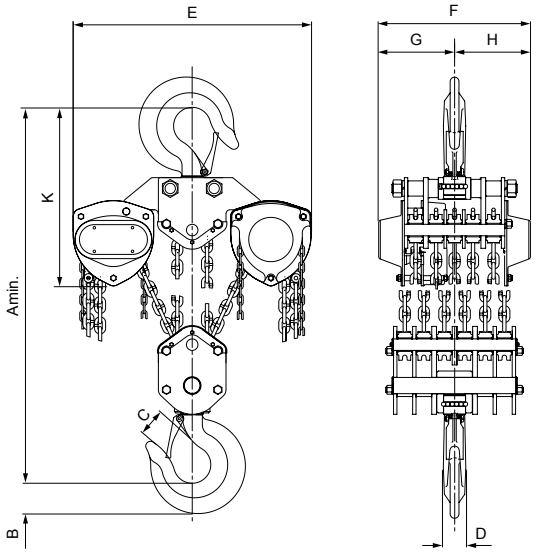

VS*III*, 30000 kg, twelve chain falls

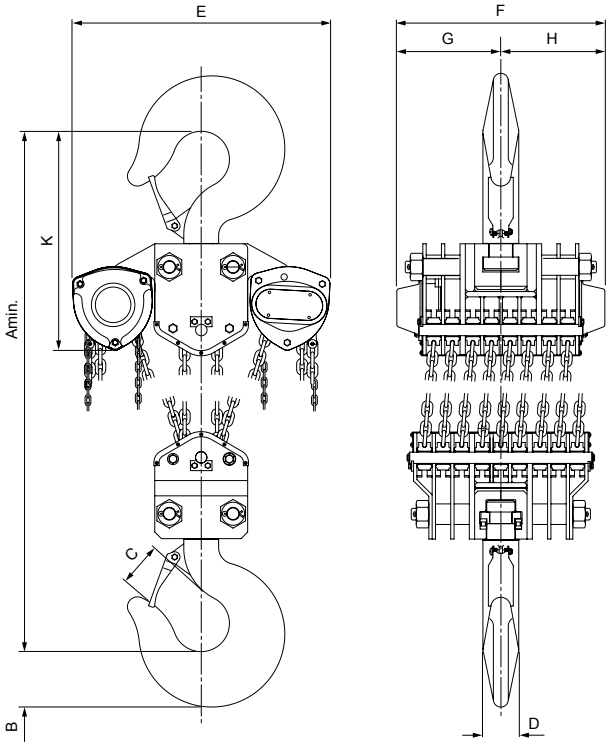

VS*III*, 50000 kg, eighteen chain falls

DESIGN AWARD 2003

Rotating hand chain guide!

360°

EXPERIENCE THE
ADVANTAGE OF 360°

We are pleased to send you our new Atex catalogue in PDF format.

INFO

Easy modification from Yalelift 360 to Yalelift IT is possible.

Yale*lift 360*

Hand chain hoist

Capacity 500 - 10000 kg

Areas of operation as well as operator conditions have been improved far beyond those of a classical hand chain hoist.

Features

- The enclosed robust stamped steel housing protects all internal components even in the toughest conditions.
- The extremely low headroom allows maximum use of the lifting height.
- The revolutionary 360° rotating hand chain guide allows the operator to work from virtually any position, in confined spaces or above the load. The Yalelift can even be operated from the side of the load which also makes it possible to use the hoist for horizontal pulling or tensioning. Due to the additional flexibility, the operator is no longer forced to work in the danger zone near the load.
- The brake system is extremely quiet and guarantees operational safety and improved serviceability due to omission of the vulnerable ratchet pawls. All parts are made of high quality materials, additionally zinc-plated or yellow-chromated to increase corrosion prevention.
- Chain guide and gearbox are almost totally enclosed. Even under the toughest conditions the internal gearbox remains protected.
- The hardened load sheave with four precision machined pockets ensures accurate movement of the load chain.
- The surface protected zinc-plated alloy steel load chains fulfil all requirements of current national and international standards and regulations. They are optimally matched to the load sprocket and ensure safe and long-lasting operation of the unit.
- Forged load and suspension hooks that yield under overoad instead of breaking, are made of high tensile steel. The hooks are fitted with robust safety latches and rotate 360°.

Optional

- Adjustable overload protection device.
- Chain container
- Corrosion resistant version.

Yale*lift 360*

Hand chain hoist, 20 t

Capacity 20000 kg

In spite of its high capacity, the Yale*lift 360* 20 t features a compact design.

Features

- All components are made of high quality materials, some components are zinc-plated or yellow-chromated for added corrosion protection. This ensures that also heaviest loads are held reliably.
- The enclosed robust stamped steel body resists in the toughest conditions and allows outside operation.
- The hardened load sheave with five precision machined pockets ensures accurate movement of the load chain.
- The low headroom (hook-to-hook dimension 1065 mm) allows maximum use of the lifting height.
- The Yale*lift 360* 20 t is equipped with six chain falls only which results in higher speed and lower weight.

Optional

- Adjustable overload protection device.
- Chain container
- Corrosion resistant version.

The robust stamped steel housing with four stay bolts is resistant to the toughest working conditions.

Chain guide

UPGRADE

SIMPLE & FLEXIBLE

FROM Yale*lift 360* TO Yale*lift* IT

Technical data Yale*lift 360*

Model	Art-No.	Capacity kg	Number of chain falls	Chain dimensions d x p in mm/ design	Lift per 1 m hand chain overhaul mm	Handle pull at WLL daN	Weight at standard lift (3 m) kg
YL 500	N04700109	500	1	5 x 15 - T	33	21	9
YL 1000	N04700110	1000	1	6 x 18 - T	20	30	13
YL 2000	N04700111	2000	1	8 x 24 - T	14	32	21
YL 3000	N04700112	3000	1	10 x 30 - V	12	38	34
YL 5000	N04700113	5000	2	10 x 30 - T	6	34	48
YL 10000	N04700075	10000	3	10 x 30 - V	4	44	71
YL 20000	N04700077	20000	6	10 x 30 - V	2	2 x 44	196

Dimensions Yale*lift 360*

Model	YL 500	YL 1000	YL 2000	YL 3000	YL 5000	YL 10000	YL 20000
A min., mm	300	335	395	520	654	825	1.065
B, mm	17	22	30	38	45	68	85
C, mm	24	29	35	40	47	68	64
D, mm	133	156	182	220	220	220	303
E, mm	148	175	203	250	250	383	555
F, mm	148	167	194	219	219	219	250
G, mm	139	164	192	225	242	326	391
H, mm	206	242	283	335	352	436	501
I, mm	24	24	31	34	21	136	–
K, mm	61	70	83	95	95	95	396
L, mm	87	97	111	124	124	124	125
M, mm	110	125	156	178	285	401	471
N, mm	14	19	22	30	37	50	56

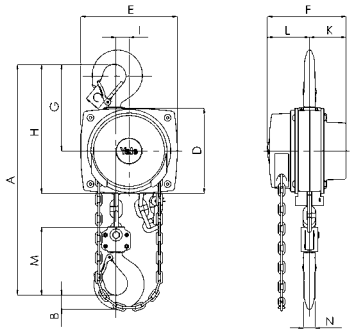

Yale*lift 360*, 500 - 3000 kg, single fall

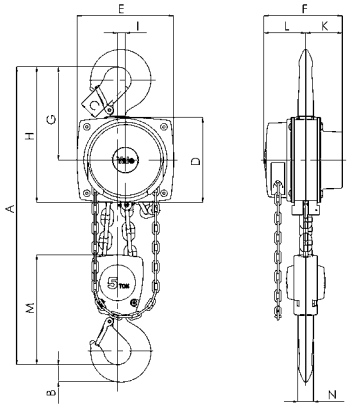

Yale*lift 360*, 5000 kg, double fall

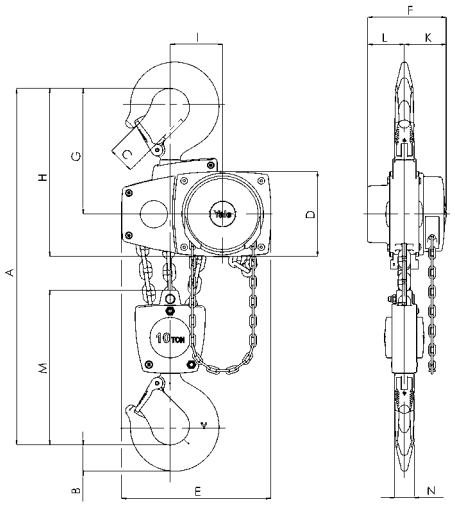

Yale*lift 360*, 10000 kg, three falls

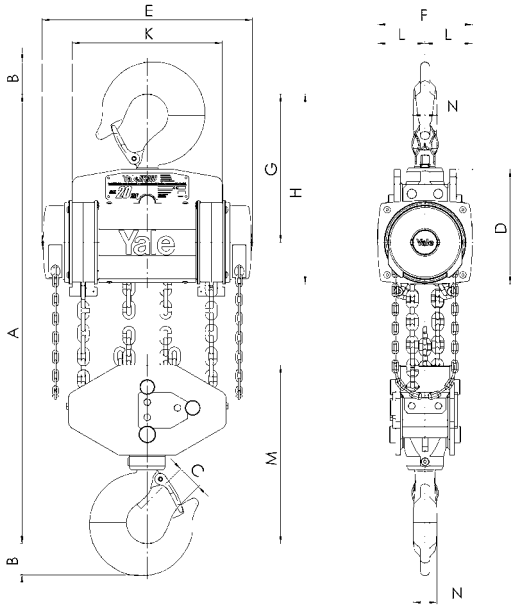

Yale*lift 360*, 20000 kg, six falls

Yale*lift 360*

ARCTIC EDITION

Hand chain hoist

Capacity 500 - 20000 kg

As with the Yalelift 360, we are also introducing the Yale UNOplus Series A in *ARCTIC EDITION*, a hand lever hoist for extreme applications.

It was ensured that all functions even under extremes temperatures work satisfactory. Materials used for this purpose as well as lubricants adapted to the requirements and tested and certified in complex low-temperature test procedures, which means that the user can work safely and productively with the YaleUNOplus Series A, allows temperatures down to -40°C.

In addition to static tests, dynamic low-temperature tests were also carried out to rule out malfunctions and material failure.

We can confirm the user's suitability with a certificate!

360°

EXPERIENCE THE
ADVANTAGE OF 360°

TESTED APPROVED -40°C

INFO

Standard hoists according to EN13157
(cranes - safety - hand operated cranes)

5.1.12 Temperature
Hand chain blocks and their components shall be capable of operating within an ambient temperature range of -10°C to +50°C unless another temperature range is agreed between the manufacturer and the purchaser. Standard hoist products from CMCO are suitable for a temperature range of -20°C to +50°C!

Technical data Yale*lift 360 ARCTIC EDITION*

Model	Art-No.	Capacity kg	Number of chain falls	Chain dimensions d x p in mm/ design	Lift per 1 m hand chain overhaul mm	Handle pull at WLL daN	Weight at standard lift (3 m) kg
YL 500 *ARCTIC EDITION*	192099205	500	1	5 x 15 - T	33	21	9
YL 1000 *ARCTIC EDITION*	192099206	1000	1	6 x 18 - T	20	30	13
YL 2000 *ARCTIC EDITION*	192099207	2000	1	8 x 24 - T	14	32	21
YL 3000 *ARCTIC EDITION*	192099208	3000	1	10 x 30 - V	12	38	34
YL 5000 *ARCTIC EDITION*	192099209	5000	2	10 x 30 - T	6	34	48
YL 10000 *ARCTIC EDITION*	192099210	10000	3	10 x 30 - V	4	44	71
YL 20000 *ARCTIC EDITION*	192099211	20000	6	10 x 30 - V	2	2 x 44	196

Dimensions Yale*lift 360 ARCTIC EDITION*

Model	**YL 500 *ARCTIC EDITION***	**YL 1000 *ARCTIC EDITION***	**YL 2000 *ARCTIC EDITION***	**YL 3000 *ARCTIC EDITION***	**YL 5000 *ARCTIC EDITION***	**YL 10000 *ARCTIC EDITION***	**YL 20000 *ARCTIC EDITION***
A min., mm	300	335	395	520	654	825	1065
B, mm	17	22	30	38	45	68	85
C, mm	24	29	35	40	47	68	64
D, mm	133	156	182	220	220	220	303
E, mm	148	175	203	250	250	383	555
F, mm	148	167	194	219	219	219	250
G, mm	139	164	192	225	242	326	391
H, mm	206	242	283	335	352	436	501
I, mm	24	24	31	34	21	136	–
K, mm	61	70	83	95	95	95	396
L, mm	87	97	111	124	124	124	125
M, mm	110	125	156	178	285	401	471
N, mm	14	19	22	30	37	50	56

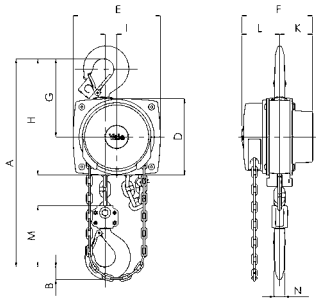

Yale*lift 360*, 500 - 3000 kg, single fall

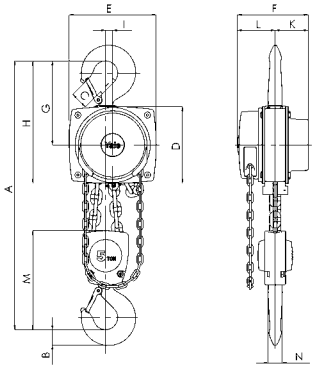

Yale*lift 360*, 5000 kg, double fall

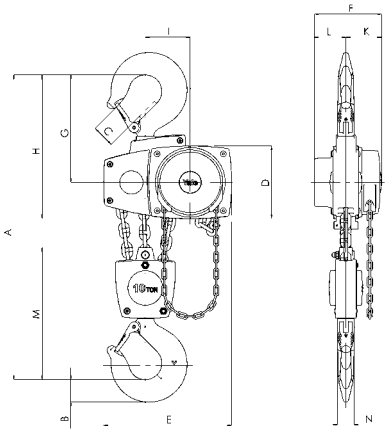

Yale*lift 360*, 10000 kg, three falls

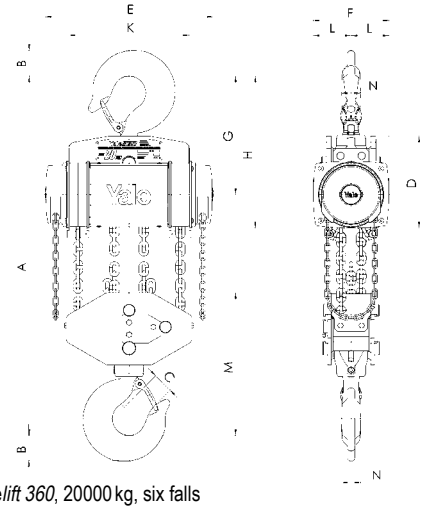

Yale*lift 360*, 20000 kg, six falls

Depicted rubber buffers are optionally available!

Yale*lift 360*

YLIT – Hand chain hoist with integrated push or with integrated geared trolley

Capacity 500 - 20000 kg

The combination of the Yale*lift 360* with a low headroom manual trolley provides even more flexibility in the application.

Features

- All units of this series up to a capacity of 3000 kg are built with a single chain fall, the min. headroom (Dim. A) has been further reduced. Ideal for applications with low ceilings and limited headroom.
- The approved and almost stepless adjustment system of the trolley enables the simple and quick assembly due to adjusting nuts.
- Trolleys up to 5 t capacity are offered for two beam ranges; range A for a flange width of up to 180 mm is standard and covers approx. 80 % of all applications. Conversion to range B for beam width up to 300 mm can be easily accomplished.
- The trolley wheels are designed for a max. beam profile incline of 14 % (DIN 1025 - part 1), excellent rolling features are guaranteed by pre-lubricated, encapsulated ball bearings.
- Anti-drop and anti-tilt devices as standard.

Optional

- Adjustable overload protection device.
- Chain container
- Rubber buffers
- Corrosion resistant version.
- Beam locking device to secure the unloaded hoist with integrated trolley in a fixed position on the beam (park position e.g. on ships).

360°

EXPERIENCE THE ADVANTAGE OF 360°

UPGRADE

SIMPLE & FLEXIBLE

FROM *360* TO Yale*lift* IT

Technical data Yale*lift* ITP - with integrated push trolley

Model	Art-No.	Capacity in kg/ Number of chain falls	Size	Beam flange width b mm	Beam flange thickness t max. mm	Curve radius min. m	Weight at standard lift (3 m) kg
YL ITP 500	N04900044	500/1	A	50 - 180	19	0.9	20
YL ITP 1000	N04900045	1000/1	A	50 - 180	19	0.9	27
YL ITP 2000	N04900046	2000/1	A	58 - 180	19	1.15	44
YL ITP 3000	N04900047	3000/1	A	74 - 180	27	1.5	77
YL ITP 5000	N04900020	5000/2	A	98 - 180	27	2.0	125
YL ITP 500	–	500/1	B	180 - 300	19	0.9	21
YL ITP 1000	–	1000/1	B	180 - 300	19	0.9	29
YL ITP 2000	–	2000/1	B	180 - 300	19	1.15	46
YL ITP 3000	–	3000/1	B	180 - 300	27	1.4	79
YL ITP 5000	–	5000/2	B	180 - 300	27	1.8	129

Technical data Yale*lift* ITG - with integrated geared trolley

Model	Art-No.	Capacity in kg/ Number of chain falls	Size	Beam flange width b mm	Beam flange thickness t max. mm	Curve radius min. m	Weight at standard lift (3 m) kg
YL ITG 500	N04900056	500/1	A	50 - 180	19	0.9	24
YL ITG 1000	N04900057	1000/1	A	50 - 180	19	0.9	32
YL ITG 2000	N04900058	2000/1	A	58 - 180	19	1.15	49
YL ITG 3000	N04900059	3000/1	A	74 - 180	27	1.5	82
YL ITG 5000	N04900060	5000/2	A	98 - 180	27	2.0	130
YL ITG 500	–	500/1	B	180 - 300	19	0.9	25
YL ITG 1000	–	1000/1	B	180 - 300	19	0.9	33
YL ITG 2000	–	2000/1	B	180 - 300	19	1.15	50
YL ITG 3000	–	3000/1	B	180 - 300	27	1.4	84
YL ITG 5000	–	5000/2	B	180 - 300	27	1.8	134
YL ITG 10000	N04900061	10000/3	B	125 - 310	40	1.8	202
YL ITG 20000 [1]	N04900055	20000/6	B	180 - 310	40	9.5	on request

[1] Dimensions on request

COMPLETE SERIES YALELIFT

CAPACITIES FROM 500 - 20000 KG

WITH

INTEGRATED PUSH OR GEARED TROLLEY

We are pleased to send you our new Atex catalogue in PDF format.

Dimensions Yale*lift* ITP/ITG

Model	YLIT 500	YLIT 1000	YLIT 2000	YLIT 3000	YLIT 5000	YLIT 10000
A min., mm	245	272	323	382	550	784
A1, mm	158	178	205.5	252	260.5	380
A2, mm	–	–	–	–	–	–
B, mm	17	22	30	38	45	68
C, mm	24	29	35	40	47	68
D, mm	14	19	22	30	37	50
F (Geared trolley), mm	92	92	91	107	149.5	113
H1, mm	24.5	24	23.5	32	30.5	55
I (Push trolley), mm	71.5	71.5	95.5	131	142.5	169
I (Geared trolley), mm	76.5	76.5	98	132.5	148.5	169
L, mm	270	310	360	445	525	430
L1, mm	130	130	150	180	209	200
L2, mm	159	175	207	256	283	261
M, mm	M 18	M 22	M 27	M 30	M 42	M 48
O, mm	60	60	80	112	125	150
P (Geared trolley), mm	108	110	112	112	117	158
T (Area A), mm	280	290	305	320	364	–
T (Area B), mm	400	410	425	440	484	540

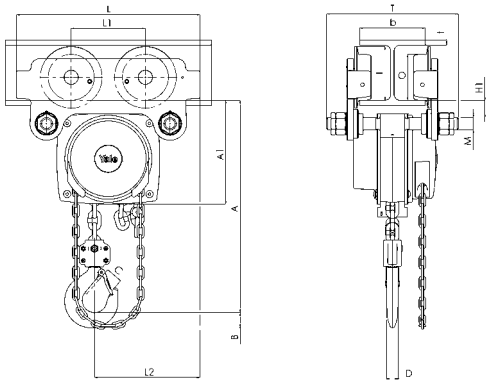

Yale*lift* ITP, 500 - 3000 kg, single fall

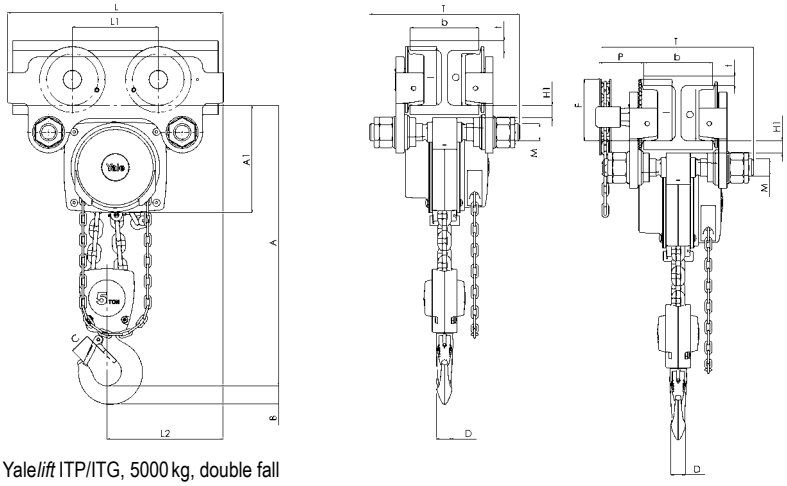

Yale*lift* ITP/ITG, 5000 kg, double fall

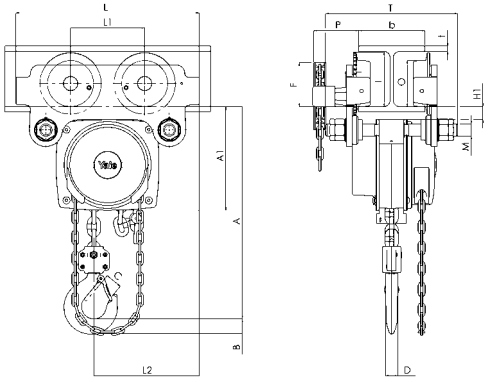

Yale*lift* ITG, 500 - 3000 kg, single fall

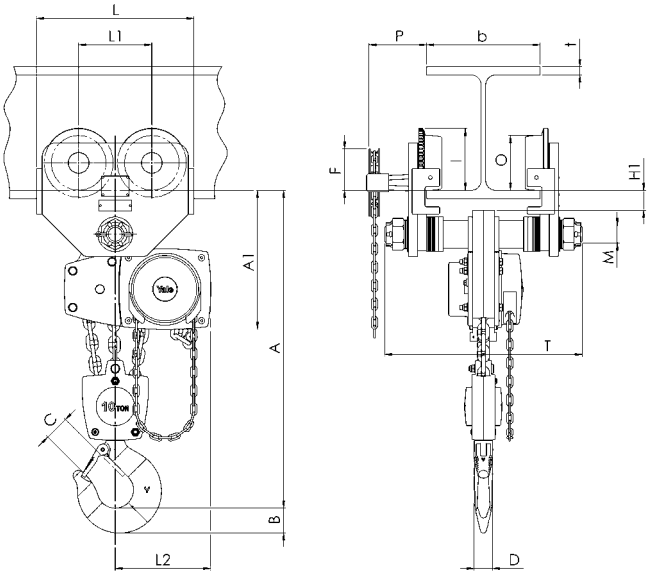

Yale*lift* ITG, 10000 kg, three falls

Yale*lift 360*

YLLH – Hand chain hoist with integrated push or with integrated geared trolley (low headroom)

Capacity 500 - 10000 kg

The hand chain hoist Yale*lift* LH with integrated low headroom manual trolley is the consequent further development of the Yale*lift* IT. Wherever an even smaller headroom is essential, the Yale*lift* LH is the ideal choice.

Features

- The specially developed chain reeving system and chain guide allow the bottom block to be pulled laterally to the hoist even further up and almost against the beam flange.
- The integrated design of the innovative Yale*lift* LH uses the same manual trolleys as incorporated in the Yale*lift* IT series.
- All units of this series up to a capacity of 3000 kg are built with a single chain fall.
- The approved and almost stepless adjustment system of the trolley enables the simple and quick assembly due to adjusting nuts.
- Trolleys up to 5 t capacity are offered for two beam ranges; range A for a flange width of up to 180 mm is standard and covers approx. 80 % of all applications. Conversion to range B for beam width up to 300 mm can be easily accomplished.
- The trolley wheels are designed for a max. beam profile incline of 14 % (DIN 1025 - part 1), excellent rolling features are guaranteed by pre-lubricated, encapsulated ball bearings.
- The low headroom version of the Yale*lift* IT is adjustable to fit a wide range of beam profiles (e.g. INP, IPE, IPB).
- Anti-drop and anti-tilt devices as standard.

Optional

- Adjustable overload protection device.
- Chain container
- Rubber buffers
- Corrosion resistant version.
- Beam locking device to secure the unloaded hoist with integrated trolley in a fixed position on the beam (park position e.g. on ships).

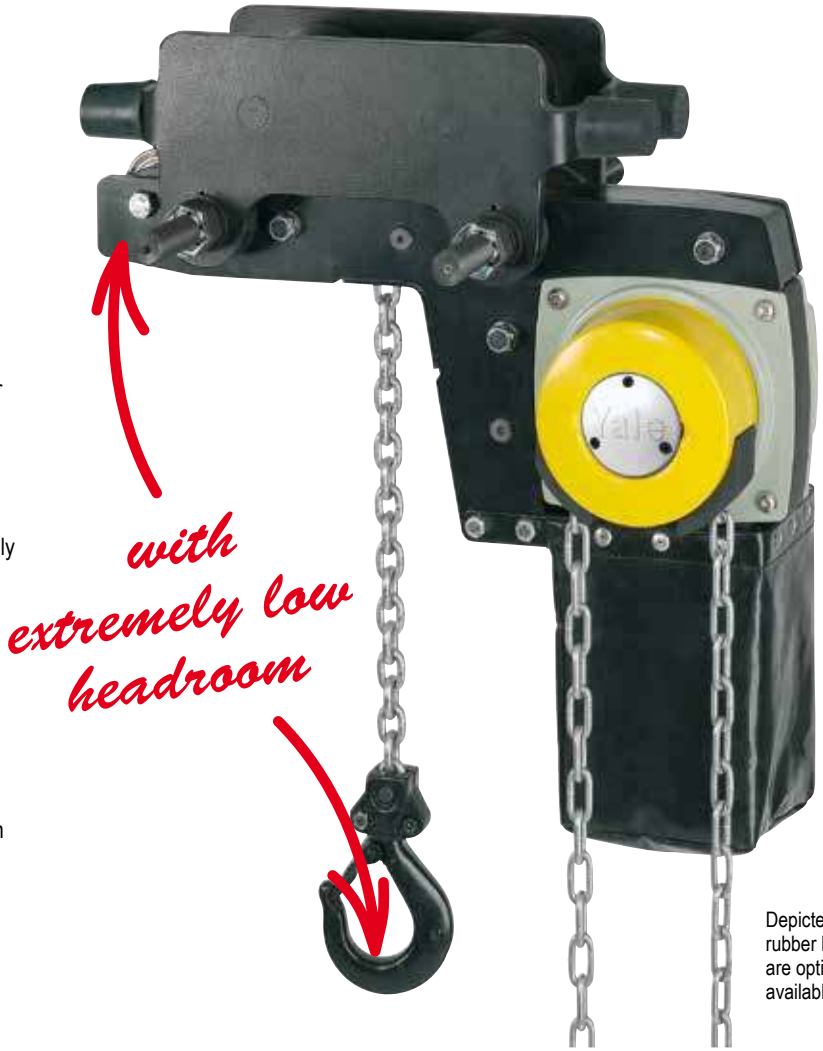

Depicted rubber buffers are optionally available!

360°

EXPERIENCE THE ADVANTAGE OF 360°

We are pleased to send you our new Atex catalogue in PDF format.

Technical data Yale*lift* LHP - with integrated push trolley

Model	Art-No.	Capacity in kg/ Number of chain falls	Size	Beam flange width b mm	Beam flange thickness t max. mm	Curve radius min. m	Weight at standard lift (3 m) kg
YL LHP 500	N05600017	500/1	A	60 - 180	19	0.9	27
YL LHP 1000	N05600018	1000/1	A	70 - 180	19	0.9	35
YL LHP 2000	N05600019	2000/1	A	82 - 180	19	1.15	61
YL LHP 3000	N05600020	3000/1	A	100 - 180	19	1.5	107
YL LHP 5000	N05600021	5000/2	A	110 - 180	27	2.0	152
YL LHP 500	–	500/1	B	180 - 300	19	0.9	27
YL LHP 1000	–	1000/1	B	180 - 300	19	0.9	36
YL LHP 2000	–	2000/1	B	180 - 300	19	1.15	62
YL LHP 3000	–	3000/1	B	180 - 300	19	1.4	109
YL LHP 5000	–	5000/2	B	180 - 300	27	1.8	156

Technical data Yale*lift* LHG - with integrated geared trolley

Model	Art-No.	Capacity in kg/ Number of chain falls	Size	Beam flange width b mm	Beam flange thickness t max. mm	Curve radius min. m	Weight at standard lift (3 m) kg
YL LHG 500	N05600022	500/1	A	60 - 180	19	0.9	31
YL LHG 1000	N05600023	1000/1	A	70 - 180	19	0.9	40
YL LHG 2000	N05600024	2000/1	A	82 - 180	19	1.15	65
YL LHG 3000	N05600025	3000/1	A	100 - 180	19	1.5	112
YL LHG 5000	N05600026	5000/2	A	110 - 180	27	2.0	157
YL LHG 10000	192038865	10000/3	A	125 - 210	40	1.8	230
YL LHG 500	–	500/1	B	180 - 300	19	0.9	32
YL LHG 1000	–	1000/1	B	180 - 300	19	0.9	41
YL LHG 2000	–	2000/1	B	180 - 300	19	1.15	67
YL LHG 3000	–	3000/1	B	180 - 300	19	1.4	114
YL LHG 5000	–	5000/2	B	180 - 300	27	1.8	161
YL LHG 10000	N05600027	10000/3	B	190 - 310	40	1.8	232

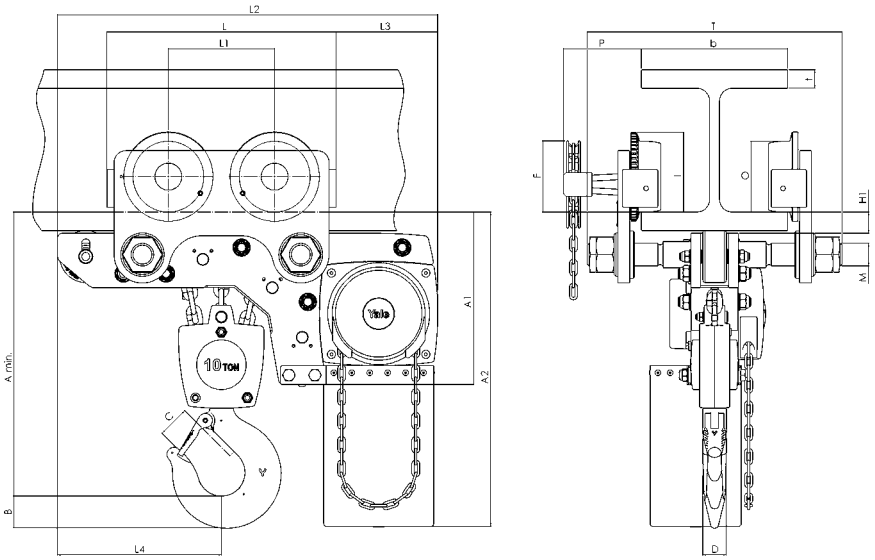

Yale*lift* LHG, 10000 kg, three falls

Dimensions Yale*lift* LH

Model	YLLH 500	YLLH 1000	YLLH 2000	YLLH 3000	YLLH 5000	YLLH 10000
A min., mm	188	211	264	316	425	565
A1, mm	223	250	289	346	345	365
A2, mm	381	427	511	614	612	665
B, mm	17	22	30	38	45	68
C, mm	24	29	35	40	47	68
D, mm	14	19	22	30	37	50
F (Geared trolley), mm	92	92	91	107	150	150
H1, mm	24	24	24	32	31	45
I (Push trolley), mm	72	72	96	131	143	–
I (Geared trolley), mm	77	77	98	133	149	170
L, mm	270	310	360	445	525	485
L1, mm	130	130	150	180	209	225
L2, mm	444	488	582	690	720	805
L3, mm	124	135	172	203	175	215
L4, mm	184	201	230	265	283	348
M, mm	M 18	M 22	M 27	M 30	M 42	M 48
O, mm	60	60	80	112	125	150
P (Geared trolley), mm	108	110	112	112	117	165
T (Area A), mm	280	290	305	320	364	440
T (Area B), mm	400	410	425	440	484	540

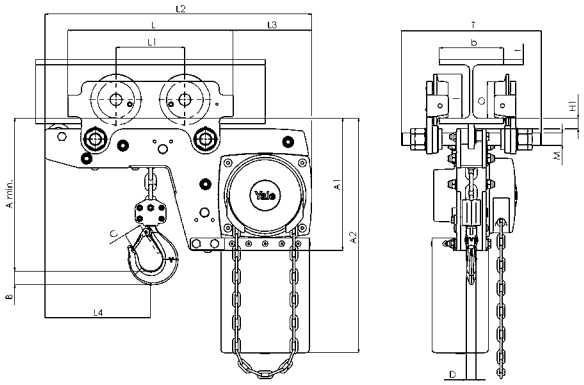

Yale*lift* LHP, 500 - 3000 kg, single fall

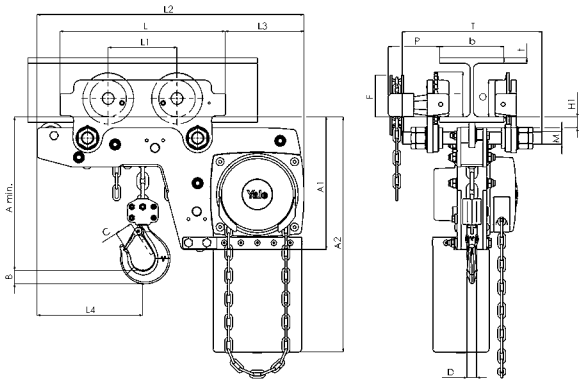

Yale*lift* LHG, 500 - 3000 kg, single fall

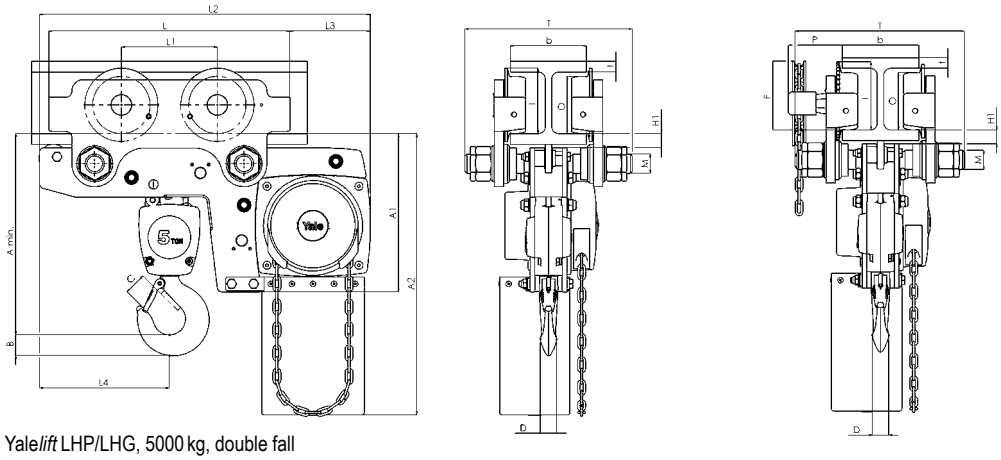

Yale*lift* LHP/LHG, 5000 kg, double fall

Yale*MINI 360*

Hand chain hoist

new!

Capacity 250 - 500 kg

The smallest of the Yale hand chain hoists has a compact design and a hand chain wheel cover that allows a rotation of 360°. This ensures a high level of safety, as it is possible to work outside the danger zone.

The housing of the new YaleMINI 360 is made of die-cast aluminium, which makes it a very lightweight hand chain hoist. Due to the low weight, there are countless possible applications, e.g. assembly work in industry, car repair shops, crafts etc.

Features

- With the 360° rotating hand chain guide, a very large work area can be covered, this makes it possible for the operator to stand clear of the danger zone.
- Compact design, light weight, easy to carry.
- Made of die-cast aluminium.
- Due to the compact housing, all internal parts are protected. The device can therefore also be used outdoors or in rough environments.
- The load pressure brake complies with all technical regulations, thus the load is held in any position.
- The standard equipment includes forged lifting and load hooks made from age-resistant high-alloy tempered steel, which open when overloaded without breaking. The hooks can be rotate through 360 degrees and are fitted with robust safey catches.
- The galvanized steel load chain complies with all applicable national and international regulations. The optimal fit to the load chain wheel ensures safe and long lasting operation.

360°

EXPERIENCE THE ADVANTAGE OF 360°

Due to its size, the YaleMINI 360 fits into every tool box and supports the operator in his work.

Technical data Yale*MINI 360*

Model	Art.-No.	Capacity kg	Number of chain falls	Chain dimensions d x p in mm/ design	Lift per 1 m hand chain overhaul mm	Handle pull at WLL daN	Weight at standard lift (3 m) kg
Yale*MINI 360* 250	192084199	250	1	3 x 9 - T	40	25	2.9
Yale*MINI 360* 500	192084200	500	1	4 x 12 - T	25	24	4.3

Dimensions Yale*MINI 360*

Model	Yale*MINI 360* 250	Yale*MINI 360* 500
A min., mm	245	285
B, mm	17	22
C, mm	21	23
D, mm	13	18
E, mm	84	104
F, mm	87	101
G, mm	51	58
H, mm	36	43
K, mm	150	175

INFO

Yale hoists and trolleys are not designed for passenger elevation applications and must not be used for this purpose.

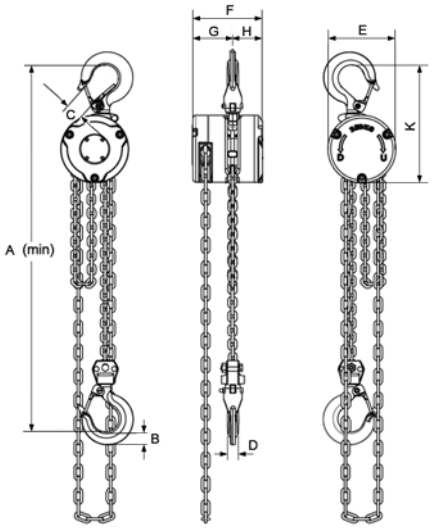

Capacity 250 kg

Capacity 500 kg

Lifting application

Pulling application

Corroded Yalelift with integrated trolley
– still functional after 9 years in use

Corrosion protection

What does corrosion actually mean?

Corrosion is a term from the Latin “corrodere” and means to decompose or eat away and is, from a technical point of view the reaction of a material with its environment. In popular speech, metals are also referred as “rusting”.

How does corrosion occur?

Nowadays, metals are exposed to a wide variety of environmental influences, such as climate and air pollution. This can change their structure. Especially with metals such as iron or steel, oxide formation has a negative effect on the material. Rust develops as a product of corrosion.
In untreated or damaged areas, humidity can hit the metal surface and thus attack it. The corresponding area begins to corrode to the point of rusting through completely.

Types of corrosion

Technically speaking, types of corrosion are classified according to material, cause and appearance and also according to where they occur.
The standard DIN EN ISO 8044 defines 37 different types of corrosion.
One of the best-known types of corrosion is contact corrosion, in which an electrochemical reaction between two different metallic materials in conjunction with e.g. humidity leads to corrosion of the less noble metal.

Other types of corrosion can be:

- pitting corrosion,
- surface corrosion,
- vibration corrosion cracking,
- gap corrosion, etc.

Areas of application

Corrosion-protected equipment with galvanised load or hand chains or rust and acid-resistant chains should be used wherever increased demands are made on corrosion resistance are required. Typical applications are in the food industry (e.g. dairies, slaughterhouses, etc.), the chemical industry (e.g. paper industry, colouring), agriculture or wastewater treatment plants.

MKS coated hand chain hoist Yalelift 360 with integrated trolley and buffers.

This is the standard version with the classification Atex Basic. However, the unit can also be used in non-explosive areas without hesitation.

Preventive corrosion protection

To prevent early corrosion, all our products are coated. This coating varies depending on the model and is carried out in the form of a wet coating, powder or MKS coating.

For specifications on corrosion protection, the DIN EN ISO 12944 series of standards is used in many cases. This series of standards is used for steel structures or structures whose components are made of unalloyed or low-alloyed steel with a thickness of at least 3 mm and which are designed in accordance with a structural safety designed.

We can only base our products on the corrosivity categories contained in this series of standards (see table below). For some models, increased corrosion protection can be achieved by applying additional or thicker coatings. You will find a detailed list on the next page.

INFO

Corrosion causes annually in Germany alone 75 billion € damage!

Corrosion protection classes in accordance to DIN EN ISO 12944

Atmospheric-Corrosivity categories, Corrosion stress	Corrosivity	Corrosion protection period	Protection period in years	Examples of typical environments
C1 very low	very low low-aggressive inside	short (L) medium (M) long (H) very long (VH)	up to 7 7 to 15 15 to 25 > 25	Only indoor rooms, insulated buildings 60 % relative humidity
C2 low	low moderate aggressive outside/inside	short (L) medium (M) long (H) very long (VH)	up to 7 7 to 15 15 to 25 > 25	Slightly polluted atmosphere, dry climate, e.g. rural areas
C3 medium	moderate low-aggressive outside	short (L) medium (M) long (H) very long (VH)	up to 7 7 to 15 15 to 25 > 25	City and industrial atmosphere with moderate SO_2 pollution or moderate climate
C4 high	high moderately aggressive outside/inside	short (L) medium (M) long (H) very long (VH)	up to 7 7 to 15 15 to 25 > 25	Industrial and coastal atmosphere with moderate salt pollution
C5 very high	very high aggressive outside/inside	short (L) medium (M) long (H) very long (VH)	up to 7 7 to 15 15 to 25 > 25	Industrial atmosphere with high relative humidity and aggressive atmosphere as well as coastal atmosphere with high salt content
CX extremely	very high maritim outside/inside	short (L) medium (M) long (H) very long (VH)	up to 7 7 to 15 15 to 25 > 25	Offshore areas with high salt content, industrial areas with extreme humidity and aggressive atmosphere as well as subtropical and tropical atmosphere

MKS Coating

The MKS coating (micro corrosion protection system) is a coating of zinc and aluminium lamellae which primarily protect the unit against corrosion. Even thin layers - typically a system consisting of base and top coat - can achieve high protective effects against base metal corrosion (red rust).

This MKS coating is used on the models Yale*lift* 360 Atex and HTP/G Atex trolleys for use in explosion-protected areas, but also, for example in wastewater treatment plants.

Powder coating

This is a coating process in which a metal surface is coated with powder. A typical coating line consists of surface pre-treatment (cleaning and/or application of a conversion coating), intermediate drying, electrostatic coating zone and dryer. The workpieces are transported via a transport system. The powder coatings produced typically have layer thicknesses between 60 and 120 µm. However, depending on the application and surface characteristics, the coating thickness can also be above or below this range.

Wet painting

Varnish is a liquid coating material. This material is applied thinly to surfaces and built up into a continuous, solid film by chemical or physical processes (for example, evaporation of the solvent). Varnishes usually consist of binders such as resins, dispersions or emulsions, fillers, pigments, solvents and additives.

Coating types as standard:

Model	Coating type		
	Wet painting	Powder coating	MKS Coating
CD 85	+		
Yalelift 360		++	
YL with integrated trolley[1]	+	++	
HTP/G	+		
CPE/CPA (with integrated trolley/Atex)	+		
Yalelift 360 Atex			+++
YL Atex with integrated trolley			+++
HTP/HTG Atex			+++

[1]Hand chain hoist powder coated/trolley wet painted

Additional coating possible for:

Model	Coating type		
	Wet painting	Powder coating	MKS + Powder coating
CD 85	x		
Yalelift 360		x	
YL with integrated trolley[1]	x	x	
HTP/G	x		
CPE/CPA (with integrated trolley/Atex)	x		
Yalelift 360 Atex			x
YL Atex with integrated trolley			x
HTP/HTG Atex			x

[1]Hand chain hoist powder coated/trolley wet painted

All three types of coating have the same purpose:

- **Protection**
  (protective effect, such as protective coating with combination of primer and top coat, protective varnishes),
- **Decoration**
  (optical effect, specific colour effect) and
- **Function**
  (special surface properties, such as modified electrical conductivity)

Selection criteria

The correct selection of an additional coating is essentially based on the following questions:

Where will the relevant equipment be used?

Chemical plants, refineries, off-/On-shore platforms etc.

What environmental stresses will the unit be exposed to?

This includes, for example, high humidity, industrial exhaust fumes, salty air, fluctuating temperature ranges, etc.

Layer thickness structure in general

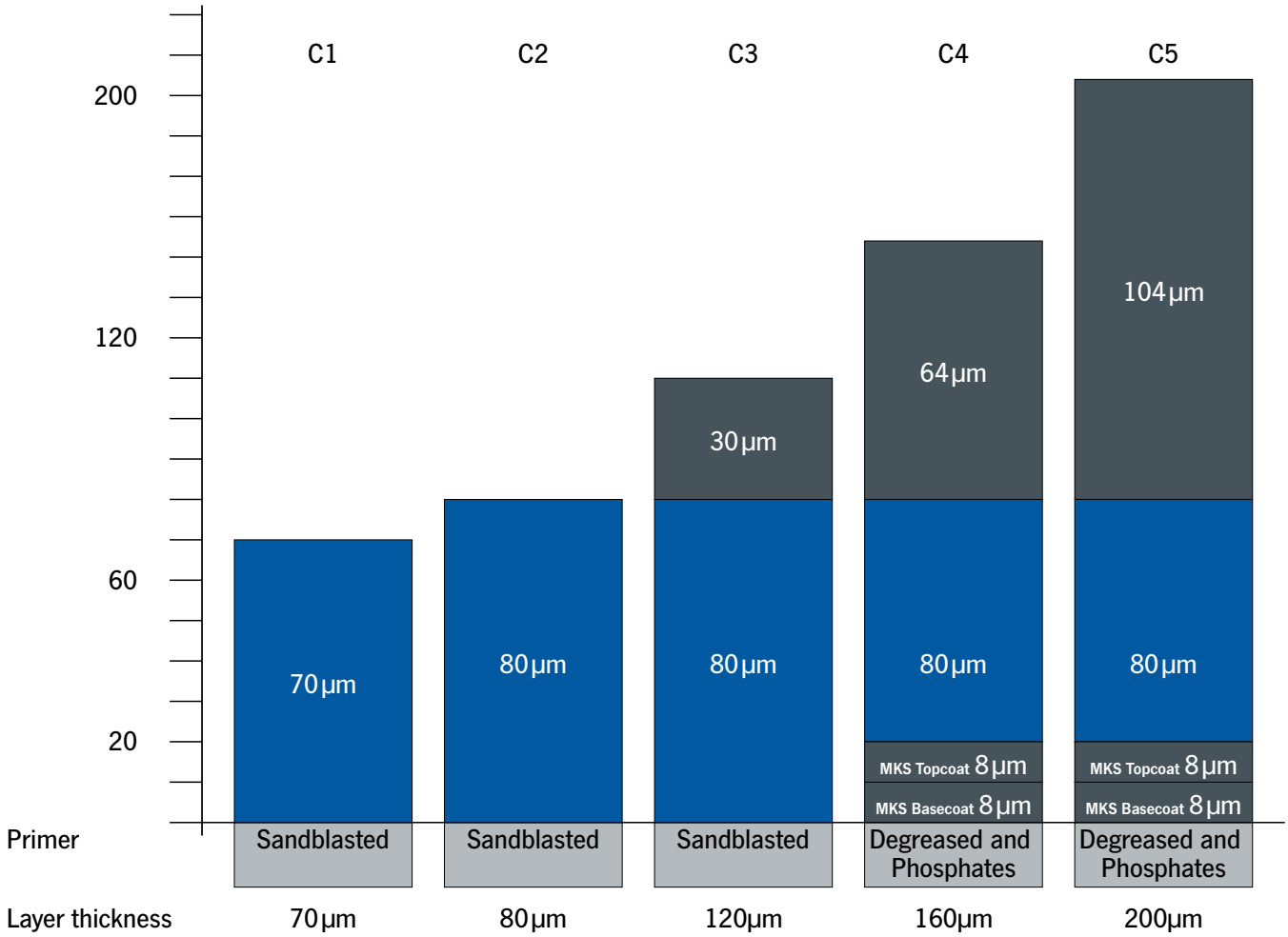

Up to C3 we cover all standard coatings (wet painting and powder coating) on our products.
This means that the corrosivity categories C1 and C2 are also covered.

INFO

We expressly point out that abrasion of the coating occurs on all external moving parts, which reduces the coating thickness. Depending on the model and type of base coating, base metal corrosion can therefore not be completely ruled out.

When measuring the coating thickness, slight deviations from the values given here are possible, depending on the measuring point.

A coating protocol can be prepared on request, at an additional charge.

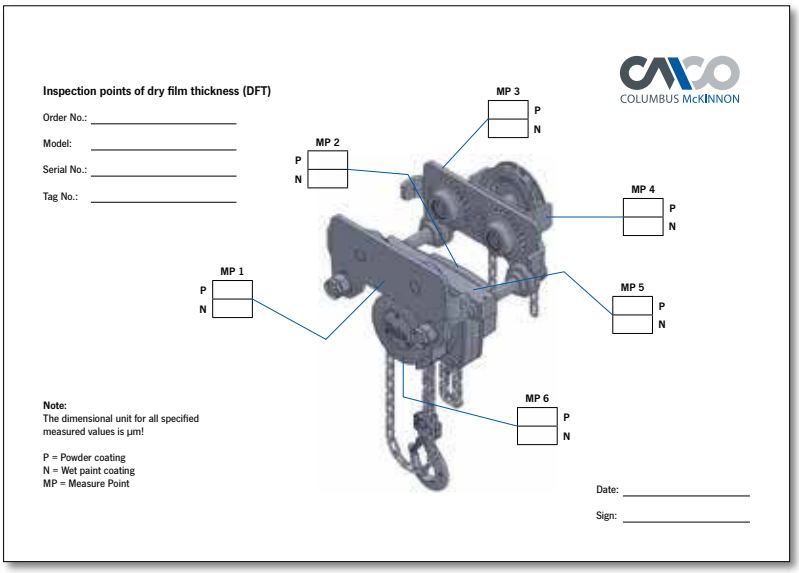

HTP (Push trolley)

HTG (Geared trolley)

SERIES EXTENSION

NOW WITH HIGH WWL!

30000 - 50000 kg

HTP and HTG
Push and geared trolley

Capacity 500 - 50000 kg

The trolley enables the exact positioning or easy traversing of large loads with either manual or powered hoisting equipment.

Features

- It has excellent rolling features due to machined steel wheels mounted on prelubricated, encapsulated ball bearings.
- Adjustable to fit a wide range of beam widths and profiles (e.g. INP, IPE and IPB).
- Adjustments are made by rotating the clevis load bar which also ensures the centred positioning of the hoist in the clevis – no creeping to the left or the right (up to 5000 kg capacity, from 8000 kg upwards the traverse is adjusted via sleeves and washers).
- The trolley wheels are designed for a max. beam profile incline of 14 % (DIN 1025 - part 1).

Optional

up to 20000 kg capacity:

- Rotating hand chain guide.
- Stainless steel hand chains.
- Locking device to secure the trolley in position on the beam (park position e.g. on ships).
- Both versions are also available with high-temperature bearings up to 350°. From 250° C, however, the load capacity is reduced to 90 % of the nominal load and from 300° C the corresponding capacity is reduced to 80 % of the nominal load.

all capacities:

- Buffers

INFO

Yale hoists and trolleys are not designed for passenger elevation applications and must not be used for this purpose.

Technical data HTP

Model	Art.-No.	Capacity kg	Size	Beam flange width b mm	Beam flange thickness t max. mm	Curve radius min. m	Hand effort at WLL daN	Weight kg	Weight with locking device kg
HTP 500	N05141273	500	A	50 - 220	25	0.9	–	8.0	14.5
HTP 1000	N05141274	1000	A	50 - 220	25	0.9	–	9.0	17.0
HTP 2000	N05141275	2000	A	66 - 220	25	1.15	–	16.0	24.0
HTP 3000	N05141276	3000	A	74 - 220	25	1.4	–	32.0	41.2
HTP 5000	N05141277	5000	A	90 - 220	25	1.8	–	48.0	58.5
HTP 500	N05148305	500	B	160 - 300	40	0.9	–	10.6	17.1
HTP 1000	N05148306	1000	B	160 - 300	40	0.9	–	12.0	20.0
HTP 2000	N05148307	2000	B	160 - 300	40	1.15	–	19.3	27.3
HTP 3000	N05148308	3000	B	160 - 300	40	1.4	–	35.8	45.0
HTP 5000	N05148309	5000	B	180 - 300	40	1.8	–	52.2	62.7

Technical data HTG

Model	Art.-No.	Capacity kg	Size	Beam flange width b mm	Beam flange thickness t max. mm	Curve radius min. m	Hand effort at WLL daN	Weight [1] kg	Weight [1] with locking device kg
HTG 500	N05300006	500	A	50 - 220	25	0.9	3	9.7	16.2
HTG 1000	N05300007	1000	A	50 - 220	25	0.9	6	11.2	19.2
HTG 2000	N05300008	2000	A	66 - 220	25	1.15	7	18.0	26.0
HTG 3000	N05300009	3000	A	74 - 220	25	1.4	7	35.4	44.6
HTG 5000	N05300010	5000	A	90 - 220	25	1.8	9	51.8	62.3
HTG 500	N05300011	500	B	160 - 300	40	0.9	3	12.6	19.1
HTG 1000	N05300012	1000	B	160 - 300	40	0.9	6	14.1	22.1
HTG 2000	N05300013	2000	B	160 - 300	40	1.15	7	21.3	29.3
HTG 3000	N05300014	3000	B	160 - 300	40	1.4	7	39.2	48.4
HTG 5000	N05300015	5000	B	180 - 300	40	1.8	9	56.0	66.5
HTG 8000	N05300016	8000	B	125 - 310	40	1.8	14	104.0	–
HTG 10000	N05300017	10000	B	125 - 310	40	1.8	14	104.0	–
HTG 15000	N05300018	15000	B	125 - 310	40	5.0	29	230.0	–
HTG 20000	N05300019	20000	B	125 - 310	40	5.0	29	230.0	–
HTG 30000	192045613	30000	B	175 - 305	34	1.6	24	248.0	–
HTG 50000	192045614	50000	B	175 - 305	34	5.1	25	489.0	–

[1] Weight without hand chain

We are pleased to send you our new Atex catalogue in PDF format.

Dimensions HTP

Model	HTP 500-A	HTP 1000-A	HTP 2000-A	HTP 3000-A	HTP 5000-A	HTP 500-B	HTP 1000-B	HTP 2000-B	HTP 3000-B	HTP 5000-B
A, mm	77	82.5	98.5	114	132.5	92	97.5	113.5	129	147.5
D, mm	16	17	22	26	33	16	17	22	26	33
D1, mm	25	30	40	48	60	25	30	40	48	60
D2, mm	30	35	47	58	70	30	35	47	58	70
F1, mm	57.5	57.5	57.5	57.5	57.5	57.5	57.5	57.5	57.5	57.5
H1, mm	30.5	30.5	30.5	30	30	45.5	45.5	45.5	45	49.5
I (HTP), mm	71.5	71.5	95.5	131	142.5	71.5	71.5	95.5	131	142.5
L, mm	260	260	310	390	450	260	260	310	390	450
L1, mm	130	130	150	180	209	130	130	150	180	209
O, mm	60	60	80	112	125	60	60	80	112	125
P1, mm	168	168	168	168	168	168	168	168	168	168
P2, mm	146	150	155	160	167.5	177	177	177	180	187.5
L3, mm	346	346	396	476	556	346	346	396	476	556

Dimensions HTG

Model	HTG 500-A	HTG 1000-A	HTG 2000-A	HTG 3000-A	HTG 5000-A	HTG 500-B	HTG 1000-B	HTG 2000-B	HTG 3000-B	HTG 5000-B
A, mm	77	82.5	98.5	114	132.5	92	97.5	113.5	129	147.5
D, mm	16	17	22	26	33	16	17	22	26	33
D1, mm	25	30	40	48	60	25	30	40	48	60
D2, mm	30	35	47	58	70	30	35	47	58	70
F (HTG), mm	91.5	91.5	90.5	107.5	149.5	91.5	91.5	90.5	107.5	149.5
F1, mm	57.5	57.5	57.5	57.5	57.5	57.5	57.5	57.5	57.5	57.5
H1, mm	30.5	30.5	30.5	30	30	45.5	45.5	45.5	45	45
I (HTG), mm	76.5	76.5	98	132.5	148.5	76.5	76.5	98	132.5	148.5
L, mm	260	260	310	390	450	260	260	310	390	450
L1, mm	130	130	150	180	209	130	130	150	180	209
O, mm	60	60	80	112	125	60	60	80	112	125
P (HTG), mm	110	110	110	110	110	110	110	110	110	110
P1, mm	168	168	168	168	168	168	168	168	168	168
P2, mm	146	150	155	160	167.5	187	187	189.5	191.5	191.5
L3, mm	346	346	396	476	556	346	346	396	476	556
P3, mm	194	194	194	195	195	194	194	194	195	195

Dimensions HTG

Model	HTG 8000-B	HTG 10000-B	HTG 15000-B	HTG 20000-B	HTG 30000-B	HTG 50000-B
A, mm	276	276	270	270	261	310
B, mm	52	52	70	70	65	100
D, mm	30	30	35	35	35	60
D1, mm	80	80	110	110	90	125
D2, mm	114	114	155	155	125	195
F (HTG), mm	113	113	113	113	93	93
F1, mm	77	77	–	–	–	–
H1, mm	45	45	45	45	40	40
I (HTG), mm	170	170	170	170	224	224
L, mm	430	430	870	870	625	1.260
L1, mm	200	200	200	200	296	296
L2, mm	–	–	115	115	164.5	164.5
O, mm	150	150	150	150	196	196
P (HTG), mm	163	163	163	163	165	165
P1, mm	193	193	–	–	–	–
T, mm	270	270	270	270	333	343
L3, mm	536	536	976	976	–	–

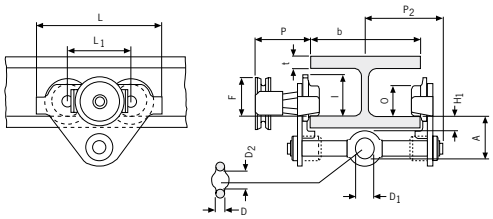

HTP/G, 500 - 5000 kg

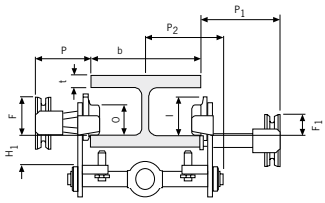

HTP/G, 500 - 5000 kg,
with locking device

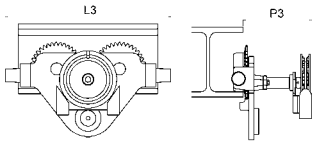

HTG, 500 - 5000 kg,
with rotating hand chain guide
and buffers

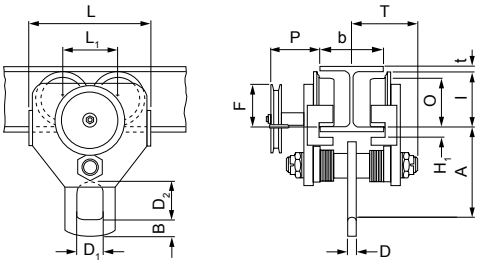

HTG, 10000 kg

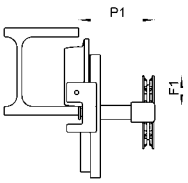

HTG, 10000 kg,
with locking device

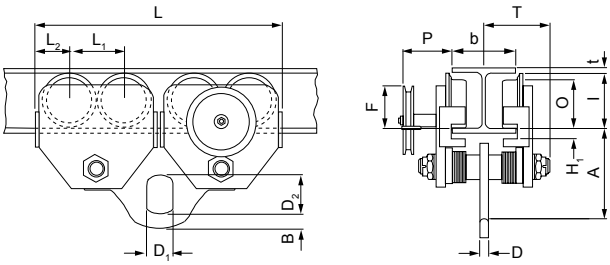

HTG, 15000 - 20000 kg

SERIES EXTENSION

NOW WITH HIGH WWL!

30000 - 50000 kg

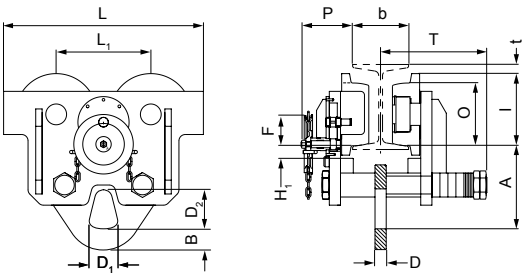

HTG, 30000 kg

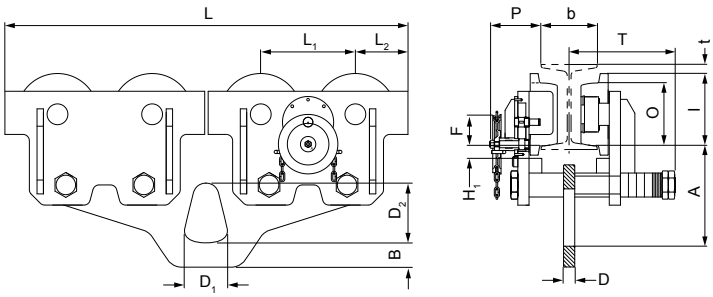

HTG, 50000 kg

CTP
Trolley clamp

Capacity 1000 - 3000 kg

Easy fitting to overhead beams for the attachment and transport of loads.

Features

- Central threaded spindle provides quick adjustment to the required beam width.
- Threaded spindle and clevis are zinc-plated for added corrosion protection.

Technical data CTP

Model	Art.-No.	Capacity kg	Beam flange width b mm	Curve radius min. m	Weight kg
CTP 1-A	NO5500024	1000	60 - 150	0.6	2.5
CTP 2-A	NO5500025	2000	75 - 200	0.9	9.9
CTP 2-B	NO5500026	2000	200 - 300	0.9	10.3
CTP 3-A	NO5500027	3000	75 - 200	1.15	17.5
CTP 3-B	NO5500028	3000	200 - 320	1.15	19.5

Dimensions CTP

Model	CTP 1-A	CTP 2-A	CTP 2-B	CTP 3-A	CTP 3-B
A, mm	82 - 109	106 - 155	136 - 191	128 - 171	150 - 212
D, mm	26	42	42	50	50
E, mm	22	20	20	22	22
H1, mm	20	24	24	30.5	30.5
I, mm	53	71.5	71.5	95.5	95.5
L, mm	160	260	260	310	310
L1, mm	75	130	130	150	150
M, mm	M12	M18	M18	M24	M24
O, mm	46	60	60	80	80
P, mm	153	205	255	220	280
T, mm	105	139	189	155	215
tmax., mm	15	25	25	25	25

INFO

Yale hoists and trolleys are not designed for passenger elevation applications and must not be used for this purpose.

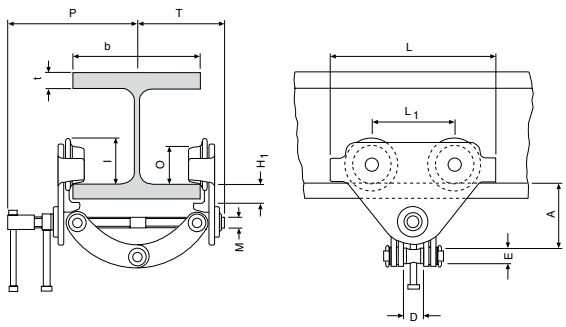

VTE-U, VTEF-U Electric trolley with shackle

Capacity 1000 - 5000 kg

Specially recommended for loads over 1000 kg, for transporting over long distances and/or when used frequently.

Suitable for almost all hoists with suspension hook due to universal shackle connection.
Travel motor with worm gear transmission ensures smooth start and self braking – a separate motor brake is not required.

Features

- Standard operating voltage:
  Euro-voltage 400 V, 3 Ph, 50 Hz.
  Single speed motors can be reconnected to 230 V, 3 Ph, 50 Hz.
- Motor protected to IP 55 against dust and water jets. Push-button pendant control IP 65.
- Compact, robust frame with low overall height.
- Wheels manufactured from fracture-proof steel. Smooth running due to machined surfaces and ball bearing mounting. Cambered profile suitable for flat and inclined beam profiles.
- Anti-drop and anti-tilt devices as standard.
- Easy adjusted to fit to a wide range of beam widths and profiles due to threaded spindles.

Optional

- Low voltage control 42 V
- Rubber buffers
- 230 V, 1 Ph, 50 Hz

Wheel with cambered profile

Threaded spindle

Anti-drop device with option to fit buffers

INFO

Yale hoists and trolleys are not designed for passenger elevation applications and must not be used for this purpose.

Technical data VTE-U, VTEF-U

Model	Art.-No.	Capacity kg	Travel speed m/min	Motor kW	Beam flange width A[2] mm	Beam flange thickness t max. mm	Curve radius min. at flange width A / B[2] m	Weight at flange width A / B[2] kg
VTE 1-A-18/U[1]	N06409625	1000	18[1]	0.18	58 - 180	19	0.9/0.9	19.5/25.2
VTEF 1-A-18/4,5/U[1]	N06409943	1000	18/4.5[1]	0.18/0.06	58 - 180	19	0.9/0.9	19.5/25.2
VTE 2-A-18/U[1]	N06409626	2000	18[1]	0.18	58 - 180	19	1.15/1.15	26/30.2
VTEF 2-A-18/4,5/U[1]	N06409945	2000	18/4.5[1]	0.18/0.06	58 - 180	19	1.15/1.15	26/30.2
VTE 3-A-11/U	N06409939	3000	11	0.37	74 - 180	27	1.5/1.4	51/53
VTEF 3-A-11/2,8/U	N06409947	3000	11/2.8	0.3/0.09	74 - 180	27	1.5/1.4	51/53
VTE 5-A-11/U	N06409941	5000	11	0.37	98 - 180	27	2.0/1.8	77/80
VTEF 5-A-11/2,8/U	N06409949	5000	11/2.8	0.3/0.09	98 - 180	27	2.0/1.8	77/80

[1] 11 or 11/2.8 m/min travel speed on request [2] Trolleys with beam flange width B are suitable for flange width of 180 - 300 mm

Dimensions VTE-U, VTEF-U

Model	VTE 1-A-18/U	VTE 2-A-18/U	VTE 3-A-11/U	VTE 5-A-11/U
A, mm	113	115	139	161
B, mm	b + 50	b + 54	b + 60	b + 70
C, mm	49	47	57	60
D, mm	16	16	19	22
E, mm	187	187	202	202
F, mm	94	94	94	94
G, mm	43	43	51	58
H, mm	129	128	144	178
H1, mm	24	24	32	32
I, mm	77	98	133	149
L1, mm	130	150	180	209
M, mm	155	180	208	263
N1G, mm	255	255	292	292
N2G, mm	263	263	296	296
O, mm	60	80	112	125
P, mm	123	123	129	121
Q, mm	145/205[3]	153/213[3]	160/220[3]	182/242[3]

[3] at beam flange width B

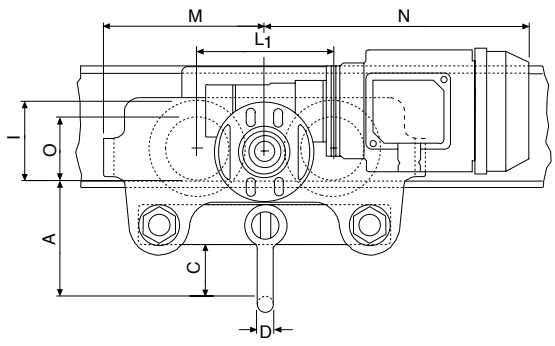

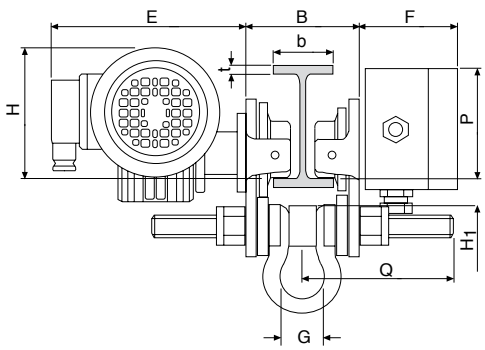

YC
Beam clamp

Capacity 1000 - 10000 kg

Provides a quick and versatile rigging point for hoisting equipment, pulley blocks or loads. Flexible application due to wide adjustment range. The central threaded spindle allows easy attachment and a safe and secure grip. The spindle can be secured against loosening.

INFO

Yale hoists and trolleys are not designed for passenger elevation applications and must not be used for this purpose.

Suitable as a horizontal anchor point.
Can also be used as a lifting clamp.

Technical data YC

Model	Art.-No.	Capacity kg	Beam flange width mm	Weight kg
YC 1	NO5406181	1000	75 - 230	3.4
YC 2	NO5406182	2000	75 - 230	3.8
YC 3	NO5407417	3000	80 - 320	7.6
YC 5	NO5407418	5000	90 - 320	11.0
YC 10	NO5407419	10000	90 - 320	17.2

Dimensions YC

Model	YC 1	YC 2	YC 3	YC 5	YC 10
A min., mm	115	115	180	180	175
A max., mm	150	150	225	225	220
A1, mm	78	78	85	95	95
A2, mm	246	246	325	325	325
B1, mm	186	186	232	242	268
B2, mm	350	350	455	445	480
b1, mm	75	75	80	90	90
b2, mm	230	230	320	320	320
C, mm	50	50	70	70	70
D, mm	3	4	6	10	14
E, mm	215	215	255	255	275
F1, mm	34	35	35	35	35
F2, mm	17	18	21	21	20
G1, mm	82	82	120	116	110
G2, mm	44	44	75	75	66
H, mm	20	20	22	28	38
J1, mm	14	14	30	30	34
J2, mm	21	21	34	34	35
K1, mm	48	50	60	60	60
K2, mm	31	32	40	42	40
L, mm	80	86	114	129	146

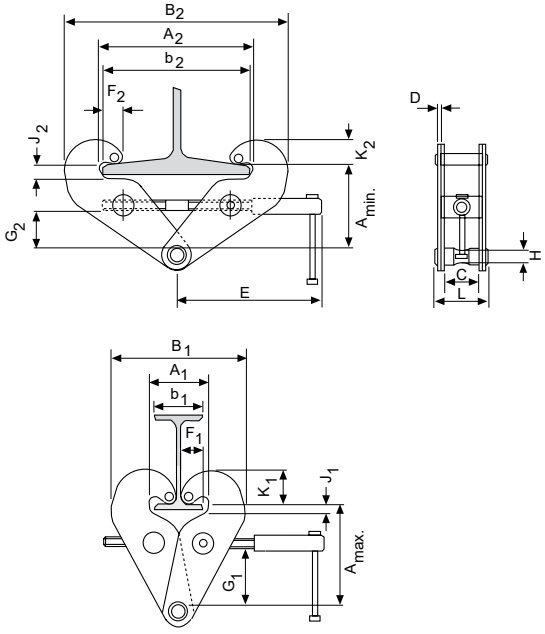

INFO

General information about electric chain hoists

Apart from the usual criterion such as lifting capacity, lifting speed and dimensions also consider following:

1. Choosing a motor according to FEM 9.683

In addition to the torque the decisive criterion for rating an electric motor is the heat it generates. Here we differentiate between two operational modes:

1.1 Intermittent duty

In this case the motor is designed for a series of equal cycles consisting of duty periods with constant load and rest periods. The heat generation depends on the relative duty cycle, that is, the relationsship between operating period under load, total operating time and the number of starts/hour.

$$ED = \frac{\text{Operating period}}{\text{Operating period + rest periods}} \%$$

The number of cycles that can be made under full load is calculated as follows:

$$S \approx 0.3 \times \frac{ED \times V}{H}$$

S = Cycles per hour
ED = Duty rating in %
V = Lifting speed in m/min
H = Average lifting height in m

A cycle consists of a motion of lifting, lowering and the rest periods. One must ensure that the lifting height does not exceed the value permitted by the percentage duty cycle referred to a cycle period of 10 minutes

$$H \leq \frac{ED \times V}{20}$$

and that simultaneously the permissible number of starts is not exceeded. It is generally accepted that a cycle consists of 6 starts.

1.2 Short time duty

Where special duty conditions exist (e.g. long hook path) the operating period must be of such length that the admissible temperature limit of the motor is not exceeded. For such cases intermittent duty must be replaced by short time duty. That is, the motor may be operated for up to 10 starts over a certain period (with Yale products 30 min). Thereafter the motor must cool down to room temperature.

1.3 Calculation example intermittant duty

Electric chain hoist	:	CPV 5-8
Lifting speed	:	8 m/min
Lifting height	:	2.8 m
Duty rating ED	:	50 %
c/h	:	180

Number of cycles per hour

$$S = 0.3 \times \frac{50 \times 8}{2.8} = 42.8$$

Max. lifting height

$$H = 2.8 \leq \frac{50 \times 8}{20} = 20\,m$$

Number of starts

$$N = \frac{25 \text{ cycles}}{\text{hour}} \times \frac{6 \text{ starts}}{\text{cycle}} = 150 \text{ c/h}$$

2. Classification of hoisting equipment according to FEM 9.511

To choose an optimal hoist the lifting capacity and also the classification group must be known. The classification group indicates the theoretical operating time of the mechanical components under full load:

Classification group	FEM ISO	1 Bm M3	1 Am M4	2 m M5	3 m M6
Operating time in h		400	800	1600	3200

If the hoist is operated as classified an actual operating time of around 10 years can be expected.
After this period a general overhaul is necessary.

To define the classification group following values must be determined:

2.1 Average operating time per day

The average operating time can be estimated or calculated as follows:

$$\text{Time/day} = \frac{\text{2 x average hook path} \times \text{cycles /hour} \times \text{time/ day}}{\text{60 x lifting speed}}$$

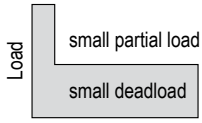

1 light

Hoists or parts thereof usually subject to very small loads and in exceptional cases only to maximum loads.

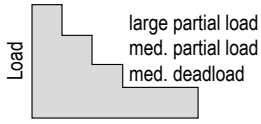

2 medium

Hoists or parts thereof usually subject to small loads but rather often to maximum loads.

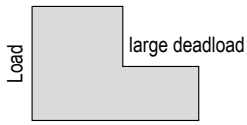

3 heavy

Hoists or parts thereof usually subject to medium loads but frequently to maximum loads.

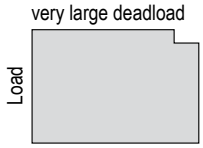

4 very heavy

Hoists or parts thereof usually subject to maximum or almost maximum loads.

2.2 Load spectrum

The load spectrum indicates to what extent a hoist or part thereof is subject to maximal stress or whether it is subject to smaller loads only. It can be calculated or estimated according to the diagrams on the right:

2.3 Classification

The classification group is defined by operating hours and load spectrum:

Load spectrum	Aver. op. hours per working day		
1 light	up to 2	2-4	4-8
2 medium	up to 1	1-2	2-4
3 heavy	up to 0.5	0.5-1	1-2
4 very heavy	up to 0.25	0.25-0.5	0.5-1
Classification group acc. to FEM/ISO	1 Bm/M3	1 Am/M4	2 m/M5

INFO

IP protection according to EN 60529

Depending on the operating and environmental conditions the damaging effect of water, foreign particles and dust and the contact with live or moving parts inside a motor is to be prevented by choosing a suitable protection.
The marking used to indicate the degree of protection consists of the letters IP followed by two characteristic numerals.
The marking applies to the unit as it is supplied and the defined or usual location of the unit.
The protection can change if the unit is located or fitted differently.

Motor surface cooled

Protection	1st digit		2nd digit
	Contact protection	Ingress of solid foreign particles	Ingress of liquid
IP 44	contact with tools or similar	against solid foreign bodies over 1 mm Ø	splashing from all directions
IP 50	complete protection against contact	damaging dust deposits	no protection
IP 54	contact with tools or similar	against solid foreign bodies over 1 mm Ø	splashing from all directions
IP 55	complete protection against contact	damaging dust deposits	water jets from all directions
IP 56	complete protection against contact	damaging dust deposits	momentarily flooding
IP 65	complete protection against contact	against ingress of dust	water jets from all directions

Protection against contact and solid foreign particles

First digit 0 No protection
No protection of persons against contact with live or moving parts inside the enclosure. No protection of equipment against ingress of solid foreign particles.

First digit 1 Protection against large solid foreign particles
Protection against accidental or inadvertent contact with live or moving parts inside the enclosure by a large surface of the human body, e.g. hand, but not protected against deliberate access to such parts.

First digit 2 Protection against med. size solid foreign particles
Protection against contact with live or moving parts inside the enclosure by fingers. Protection against ingress of medium size solid foreign particles of diameter greater than 12 mm.

First digit 3 Protection against small solid foreign particles
Protection against contact with live or moving parts inside the enclosure by tools, wires or such objects of thickness greater than 2.5 mm. Protection against ingress of small solid foreign particles of diameter greater than 2.5 mm.

First digit 4 Protection against granular structured foreign particles
Protection against contact with live or moving parts inside the enclosure by tools, wires or such objects of thickness greater than 1 mm.
Protection against ingress of granular structured solid foreign particles of diameter greater than 1 mm.

First digit 5 Protection against dust deposits
Complete protection against contact with live or moving parts inside the enclosure. Protection against harmful deposits of dust. The ingress of dust is not totally prevented, but dust cannot enter in an amount sufficient to interfere with the satisfactory operation of the equipment enclosed.

First digit 6 Complete protection
Complete protection against contact with live or moving parts inside the enclosure. Protected against the ingress of dust.

Protection against liquids

Second digit 0 No protection
No particular protection

Second digit 1 Protection against vertical water drops
Droplets of condensed water falling on the enclosure shall have no harmful effects.

Second digit 2 Protection against diagonal falling water drops
Protection against dripping liquids. Droplets of falling liquid shall have no harmful effect when the enclosure is tilted at any angle up to 15° from the vertical.

Second digit 3 Protection against spray water
Protection against dripping liquids. Water falling as rain at an angle equal to or smaller than 60° in respect to the vertical shall have no harmful effect.

Second digit 4 Protection against splashing
Liquid splashed from any direction shall have no harmful effect.

Second digit 5 Protection against water jets
Water projected by a nozzle from any direction under stated conditions shall have no harmful effect.

Second digit 6 Protection against flooding
Protection against conditions on ships decks (deck watertight equipment). Water from heavy seas shall not enter the enclosure under prescribed conditions[2].

Second digit 7 Protection against immersion in water
It shall not be possible for water to enter the enclosure under stated conditions of pressure and time[2].

Second digit 8 Protection against indefinite immersion
Protection against indefinite immersion in water.
Under specific pressure it shall not be possible for water to enter the enclosure[2]).

[2]) In certain cases water should not ingress. As required this is defined on the follow-on page of the unit in question.

Technical questionnaire to identify a suitable electric chain hoist

Company: _____ Date: _____

Contact: _____ e-Mail: _____

Phone: _____ Fax: _____

Details about intended use

_____

_____

_____

_____

_____

Required capacity

_____

Lifting height

_____

Ambient conditions

- ☐ normal
- ☐ humidity
- ☐ dust
- ☐ dirt
- ☐ particular temperatures _____ °C
- ☐ increased rel. humidity _____ %

Other

_____

_____

How long is the hoist in operation

_____ load cycles per hour

_____ hours per day

_____ days per week

_____ distance covered per lifting cycle

Unusual operating conditions that could be important for the choice and function of the electric chain hoist:

Type of load

- ☐ permanent
- ☐ changing
- ☐ shocks
- ☐ vibrations
- ☐ static

Trolley drive

- ☐ motor
- ☐ manual

Operating voltage

- ☐ 400 V
- ☐ 230 V
- ☐ 3-phase a.c.
- ☐ 1-phase a.c.

Power frequency

- ☐ 50 Hz
- ☐ 60 Hz

Protection

- ☐ IP 54
- ☐ other

Yale *CPV*

Electric chain hoist with suspension hook or with integrated trolley

Capacity 125 - 5000 kg

The electric chain hoist CPV combines modern design and technical innovation. A robust construction makes the series a versatile tool for professional applications.
The integrated limit switch for the highest and lowest hook position considerably extends the working life span of the slip clutch, motor and gearbox.

Features

- Increased operating safety through 42 V control voltage (low voltage control) and the main contactor.
- The integrated limit switch for the highest and lowest hook position considerably extends the service life of the slip clutch, motor and gearbox.
- Overload protection (slip clutch) in all CPV hoists is outside force flow to meet higher safety requirements.
- Electromagnetic spring pressure brake holds the load safely even in the event of power failure.
- Different suspension types available such as top hook, lug or an integrated trolley. A retro-fit to another type of suspension is possible.
- Any chain length (lifting height) as per customer order.
- Oil bath gearbox (or semifluid grease with CPV/F 2-8 and 5-4 as well as CPV 2-4 and 5-2) with helical gearing for particularly smooth service and enhanced lifetime.
- All-steel chain guide.
  The chain guide of the smallest hoist CPV/F 2-8 and 5-4 as well as CPV 2-4 and 5-2 is a thermoplastic (POM) chain guide that is integral with the housing.
- CPV series are protected up to IP 55
- 2 year warranty (excluding wear parts).

COMPLETE SERIES CPV

CAPACITIES 125 - 5000 KG

WITH

SUSPENSION HOOK AS STANDARD,

SUSPENSION LUG AS AN OPTION,

PUSH, GEARED OR ELECTRIC TROLLEY

INFO

Festooned cable systems please see pages 160 - 161.

Yale hoists and trolleys are not designed for passenger elevation applications and must not be used for this purpose.

Optional

- Other operating and control voltages.
- Flexible chain containers.
- Power supply cables, CEE plugs with phase changing switch.
- Radio remote controls, also acc. to DIN EN 13849-1, PL „d“.
- Pluggable control pendants.
- Wall mounted controls.
- Rotary limit switch as a back-up to standard limit switches.
- Frequency controllers, stepless and ramp controls.
- Suspensions 90° turned.
- Thermal sensors.

Optional:
Radio remote control

Optional:
with suspension lug

Yale *CPV*

Further standards

CPV „Quick Delivery“ 24 h programme

Capacity 250 - 1000 kg

Features

- Top suspension hook
- Lifting height 6 m
- With chain container

SPECIAL MODEL CPV
“QUICK DELIVERY”
THE HOIST CAN BE SHIPPED EX CMCO WUPPERTAL WITHIN 24 HOURS

Technical data CPVF - 24 h “Quick Delivery” programme

Model	Art.-No.	Capacity kg	Number of chain falls	Lifting speed in m/min main lift	fine lift
CPVF 2-8	192052434	250	1	8	2
CPVF 5-8	192052435	500	1	8	2
CPVF 10-8	192052436	1000	1	8	2

Technical data CPV/CPVF - 400 V, 3 Ph, 50 Hz

Capacity kg	Model	Number of chain falls	Chain dimensions d x p mm	Classification FEM/ISO	Lifting speed main lift m/min	Lifting speed fine lift m/min	Hoist motor rating kW	Motor rating ED %	Weight at standard lift (3 m)[1] suspension lug kg	Weight at standard lift (3 m)[1] push trolley[2] kg	Weight at standard lift (3 m)[1] electric trolley[3] kg
125	**CPV 2-8**	1	4 x 12.2	3 m/M6	8	–	0.37	75	17	26	31
125	**CPVF 2-8**	1	4 x 12.2	3 m/M6	8	2	0.37/0.09	50/25	18	27	32
250	**CPV 2-8**	1	4 x 12.2	1 Am/M4	8	–	0.37	50	17	26	31
250	**CPVF 2-8**	1	4 x 12.2	1 Am/M4	8	2	0.37/0.09	33/17	18	27	32
250	**CPVF 2-18**	1	5 x15.1	1 Am/M4	18	4.5	0.75/0.18	33/17	27	42	50
320	**CPV 5-8**	1	5 x 15.1	3 m/M6	8	–	0.75	67	26	41	49
320	**CPVF 5-8**	1	5 x 15.1	3 m/M6	8	2	0.75/0.18	45/22	27	42	50
500	**CPV 5-4**	2	4 x 12.2	1 Am/M4	4	–	0.37	50	20	29	34
500	**CPVF 5-4**	2	4 x 12.2	1 Am/M4	4	1	0.37/0.09	33/17	21	30	35
500	**CPV 5-8**	1	5 x 15.1	1 Am/M4	8	–	0.75	50	26	41	49
500	**CPVF 5-8**	1	5 x 15.1	1 Am/M4	8	2	0.75/0.18	33/17	27	42	50
500	**CPVF 5-18**	1	7.1 x 20.5	1 Am/M4	18	4.5	1.5/0.37	33/17	59	78	85
630	**CPV 10-8**	1	7.1 x 20.5	3 m/M6	8	–	1.5	67	58	77	84
630	**CPVF 10-8**	1	7.1 x 20.5	3 m/M6	8	2	1.5/0.37	45/22	59	78	85
1000	**CPV 10-4**	2	5 x 15.1	1 Am/M4	4	–	0.75	50	28	43	51
1000	**CPVF 10-4**	2	5 x 15.1	1 Am/M4	4	1	0.75/0.18	33/17	29	44	52
1000	**CPV 10-8**	1	7.1 x 20.5	1 Am/M4	8	–	1.5	50	58	77	84
1000	**CPVF 10-8**	1	7.1 x 20.5	1 Am/M4	8	2	1.5/0.37	33/17	59	78	85
1500	**CPV 20-4**	2	7.1 x 20.5	2 m/M5	4	–	1.5	62	63	82	89
1500	**CPVF 20-4**	2	7.1 x 20.5	2 m/M5	4	1	1.5/0.37	41/21	64	83	90
2000	**CPV 20-4**	2	7.1 x 20.5	1 Am/M4	4	–	1.5	50	63	82	89
2000	**CPVF 20-4**	2	7.1 x 20.5	1 Am/M4	4	1	1.5/0.37	33/17	64	83	90
2000	**CPVF 25-8**	1	11.3 x 31	2 m/M5	8	2	3.6/0.9	39/20	85	147	161
2500	**CPVF 25-8**	1	11.3 x 31	1 Am/M4	8	2	3.6/0.9	33/17	85	147	161
3200	**CPVF 50-4**	2	11.3 x 31	3 m/M6	4	1	3.6/0.9	44/22	98	160	174
5000	**CPVF 50-4**	2	11.3 x 31	1 Am/M4	4	1	3.6/0.9	33/17	98	160	174

CPV - 230 V, 1 PH, 50 HZ

125	**CPV 2-4**	1	4 x 12.2	3 m/M6	4	–	0.37	35
250	**CPV 2-4**	1	4 x 12.2	1 Bm/M3	4	–	0.37	25
500	**CPV 5-2**	2	4 x 12.2	1 Bm/M3	2	–	0.37	25
500	**CPV 5-8**	1	5 x 15.1	1 Bm/M3	8	–	1.0	25
1.000	**CPV 10-4**	2	5 x 15.1	1 Bm/M3	4	–	1.0	25

[1] Other lifting heights on request. [2] For trolleys type A and B: Additional weight for geared trolley (VTG): 2.5 kg
[3] For electric trolley with 2 speeds (VTEF) +2.0 kg

Depicted chain container optionally available.

Trolleys

Suitable for	All trolleys: Capacity of the trolley kg	Size	Beam flange width b mm	Beam flange thickness t max. mm	Curve radius min. m	Electric trolley: Travel speed m/min at 50 Hz	Motor kW at 50 Hz
CPV/CPVF 2-8/5-4, CPV 2-4/5-2	500	A	58 - 180	19	0.9	11 or 18	0.09
CPV/CPVF 2-8/5-4, CPV 2-4/5-2	500	B	180 - 300	19	0.9	11 or 18	0.09
CPV/CPVF 5-8/10-4, CPVF 2-18	1000	A	58 - 180	19	0.9	18 or 18/4.5[1]	0.18 or 0.18/0.06
CPV/CPVF 5-8/10-4, CPVF 2-18	1000	B	180 - 300	19	0.9	18 or 18/4.5[1]	0.18 or 0.18/0.06
CPV/CPVF 10-8/20-4, CPVF 5-18	2000	A	58 - 180	19	1.15	18 or 18/4.5[1]	0.18 or 0.18/0.06
CPV/CPVF 10-8/20-4, CPVF 5-18	2000	B	180 - 300	19	1.15	18 or 18/4.5[1]	0.18 or 0.18/0.06
CPVF 25-8/50-4	5000	A	98 - 180	27	2.0	11 or 11/2.8	0.37 or 0.3/0.09
CPVF 25-8/50-4	5000	B	180 - 300	27	1.8	11 or 11/2.8	0.37 or 0.3/0.09

[1] Alternatively 11 or 11/2.8 m/min

Yale *CPV*

Options and features for applications

FOR CORROSIVE ENVIRONMENT & FOOD INDUSTRY

- Stainless steel load chains.
- Stainless steel load hooks for single fall hoists.
- Zinc- or copper- bottom blocks for double fall hoists.
- Zinc plated trolleys and/or 2-component topcoat.
- Food industry approved gearbox lubricants and grease (H1).
- Textile rain coats for hoists and trolleys.

FOR SIMULTANEOUS LIFTING

Yale offers solutions for lifting loads with two or more electric chain hoists simultaneously. Depending on the customer's application, the hoist system must meet various and sometimes very demanding requirements.

Please contact Columbus McKinnon to find a suitable solution.

- Radio or cable controls
- Movement selection: single or group movement
- On trolleys or as point hoists
- Coupled trolleys

FOR CRANE BUILDING

- Beam locking device for trolleys
- Rubber buffers for trolleys
- Trolley travel end buffer stops
- 90° suspension on trolley
- Counter for operating hours
- Trolley travel end limit switches
- Signal horn or lamp for crane applications
- Festoon cable systems or other power supply
- Suspensions for light crane systems
- Crane operation pendants

Dimensions CPV/CPVF

Model	CPV/CPVF 2-8 CPV 2-4	CPV/CPVF 5-4 CPV 5-2	CPVF 2-18 CPV/CPVF 5-8	CPV/CPVF 10-4	CPVF 5-18 CPV/CPVF 10-8	CPV/CPVF 20-4	CPVF 25-8	CPVF 50-4
A, mm	327	363	357	430	431	528	514	658
A1, mm	163	163	196	196	234	234	288	288
A2 (dimension with chain container), mm								
- Size I (for lifting height, m)	343 (15 m)	343 (7.5 m)	476 (10 m)	476 (5 m)	564 (12 m)	564 (6 m)	580 (13 m)	580 (6 m)
- Size II (for lifting height, m)	413 (32 m)	413 (16 m)	526 (22 m)	526 (11 m)	644 (18 m)	644 (9 m)	764 (25 m)	764 (12 m)
- Size III (for lifting height, m)	483 (52 m)	483 (26 m)	606 (40 m)	606 (20 m)	734 (25 m)	734 (12 m)	854 (30 m)	854 (15 m)
- Size IV (for lifting height, m)	–	–	798 (64 m)	798 (32 m)	934 (40 m)	934 (20 m)	–	–
B, mm	23	23	22	29	29	37	37	37
B1, mm	12	12	15	15	20	20	33	33
C, mm	30	30	29	35	35	40	46	46
C1, mm	30	30	38	38	45	45	71	71
C2, mm	105	105	105	105	154	154	194	194
D, mm	16	16	15	21	21	26	35	35
D1, mm	12	12	15	15	15	15	25	25
E, mm	205	205	277	277	326	326	409	409
G, mm	106	126	120	144	140	173	179	179
G1 (size I), mm	124	124	142	166	175	208	264	264
G1 (size II), mm	124	124	162	186	175	208	264	264
G1 (size III), mm	124	124	162	186	175	208	265	265
G1 (size IV), mm	124	124	162	186	175	208	–	–
H, mm	99	79	157	133	186	154	230	230
H2, mm	92	72	158	158	186	186	230	180
K, mm	215	215	208	208	285	285	335	335
M (size I), mm	157	157	162	162	209	209	300	300
M (size II), mm	157	157	197	197	209	209	300	300
M (size III), mm	157	157	197	197	209	209	301	301
M (size IV), mm	157	157	197	197	209	209	–	–
N [1], mm	159	159	219	219	274	274	299	299

[1] for 230 V, 1 Ph, 50 Hz: approx. +35 mm

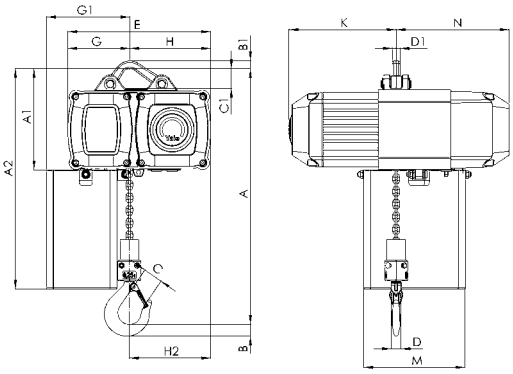

CPV/CPVF
with suspension lug, 125 - 2500 kg, single fall

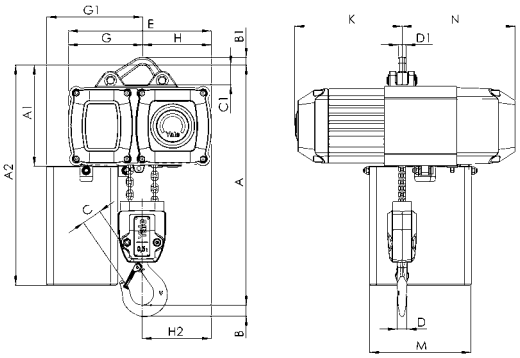

CPV/CPVF
with suspension lug, 500 - 5000 kg, double fall

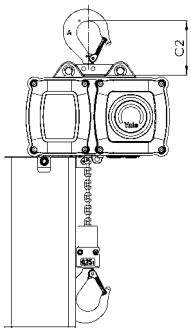

CPV/CPVF
with suspension lug, 250 - 2500 kg

Dimensions CPV/CPVF

Model	CPV/CPVF 2-8 CPV 2-4	CPV/CPVF 5-4 CPV 5-2	CPVF 2-18 CPV/CPVF 5-8	CPV/CPVF 10-4	CPVF 5-18 CPV/CPVF 10-8	CPV/CPVF 20-4	CPVF 25-8	CPVF 50-4
A3, mm	199	199	228	228	263	263	339	339
A4 (dimension with chain container), mm								
- Size I (for lift-height, m)	379 (15 m)	379 (7.5 m)	508 (10 m)	508 (5 m)	593 (12 m)	593 (6 m)	631 (13 m)	631 (6 m)
- Size II (for lift-height, m)	449 (32 m)	449 (16 m)	558 (22 m)	558 (11 m)	673 (18 m)	673 (9 m)	815 (25 m)	815 (12 m)
- Size III (for lift-height, m)	519 (52 m)	519 (26 m)	638 (40 m)	638 (20 m)	768 (25 m)	768 (12 m)	905 (30 m)	905 (15 m)
- Size IV (for lift-height, m)	–	–	830 (64 m)	830 (32 m)	968 (40 m)	968 (20 m)	–	–
A5, mm	365	401	389	462	460	558	648	738
b, mm	A = 58 - 180 B = 180 - 300	A = 58 - 180 B = 180 - 300	A = 58 - 180 B = 180 - 300	A = 58 - 180 B = 180 - 300	A = 58 - 180 B = 180 - 300	A = 58 - 180 B = 180 - 300	A = 98 - 180 B = 180 - 300	A = 98 - 180 B = 180 - 300
H1, mm	25	25	24	24	23	23	30	30
H3, mm	113	113	129	129	129	129	178	178
H4 (VTG), mm	95	95	95	95	95	95	149	149
H4 (VTE), mm	142	142	142	142	142	142	121	121
I (Push trolley), mm	72	72	72	72	96	96	142	142
I (Geared trolley), mm	76	76	77	77	98	98	149	149
L (VTP/VTG), mm	310	310	310	310	360	360	525	525
L1, mm	130	130	130	130	150	150	209	209
L2 (VTE), mm	255	255	255	255	255	255	292	292
L2 (VTEF), mm	222	222	263	263	263	263	296	296
L3, mm	135	135	155	155	180	180	263	263
L4, mm	131	111	173	161	203	203	258	208
O, mm	60	60	60	60	80	80	125	125
P, mm	171	171	180	180	180	180	172	172
P1, mm	236	236	246	246	246	246	233	233
S, mm	b + 50	b + 50	b + 50	b + 50	b + 54	b + 54	b + 70	b + 70
T, mm	94	94	94	94	94	94	94	94
tmax., mm	12	12	19	19	19	19	27	27

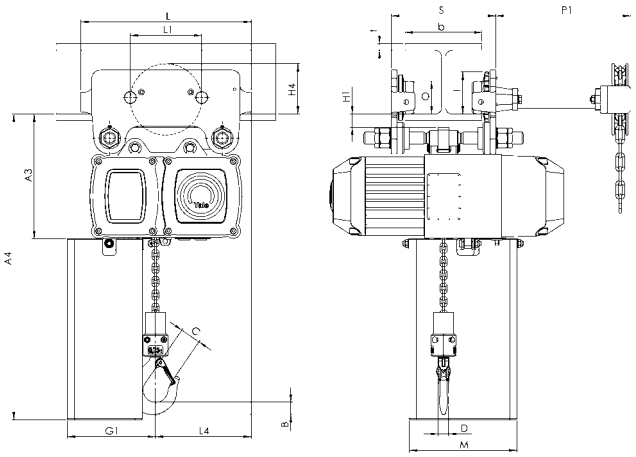

CPV/CPVF
with integrated manual push or geared trolley

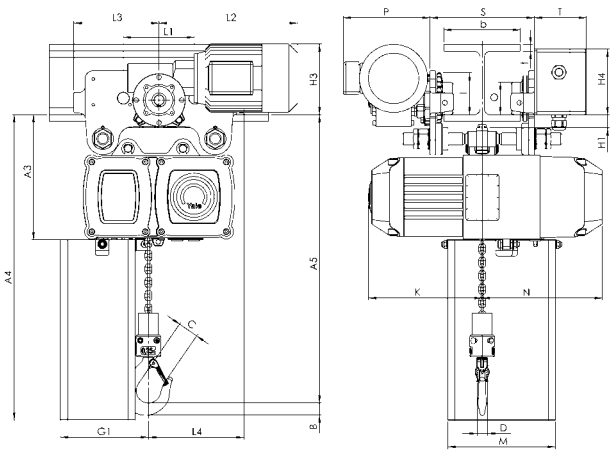

CPV/CPVF
with integrated electric trolley

The delivered product may differ from the product shown in the image.

CPEF
Electric chain hoist with suspension lug or with integrated trolley

Capacity 1600 - 7500 kg

The CPEF series is a range of high quality products for professional applications. They are highly efficient and engineered for a long working life. The hoists are composed of three main component parts which makes service easy and inexpensive.

Features

- Classification 1 Am/M4, except CPEF 20-8, CPEF 30-5 und CPEF 40-4 with classification 1 Bm/M3.
- 42 V low voltage control
- 2 year warranty (excluding wear parts) as well as a lifetime lubricated gear box.
- Motor fitted with a bimetallic thermal protection.
- The heavy duty squirrel cage motor has an adjustable spring pressure brake that holds the load secure even in the event of a power failure.
- Standard operating voltage: Euro-voltage 400 V, 3 Ph, 50 Hz.
- Motor protected to IP 55, insulation class F, against ingress of dust and water jets.
- Encapsulated pendant control protected to IP 65, against ingress of dust and water jets.
- The 5-pocket load chain sheave, manufactured from wear resistant case hardening steel, is matched perfectly to the load chain to guarantee smooth and precise chain motion.
- The standard, oil bath lubricated planetary gearbox is particularly smooth running.
- Forged suspension and load hooks are made from non-aging, high tensile steel and fitted with robust safety latches.
- The standard case hardened and zinc-plated link chain is matched perfectly to the load chain to guarantee smooth and precise chain motion.
  All requirements of national and international standards and regulations are fulfilled.

Optional

- Stainless steel load chain.
- Suspension hook rotated 90°.
- Flexible chain container.
- Other operating voltages
- Limit switches for highest and lowest hook positions (in combination with low voltage control).
- Radio remote control
- Control for synchronized operation of several hoists.
- Manual and electric trolleys.
- Festooned cable system or conductor rail system

CPEF 100-2
Electric chain hoist with suspension hook or with integrated trolley

Capacity 10000 kg

The model CPEF 100-2 consists of two CPEF 50-2 units. They are connected by a framework.
Suspension hook , geared or electric trolleys are available. Integrated limit switches for highest and lowest hook positions are standard. 42 V low voltage control as standard.

Optional

- Stainless steel load chain.
- Flexible chain container.
- Other operating voltages
- Motor with stainless steel brake.
- Radio remote control
- Festooned cable system or conductor rail system

INFO

The units are certified by the employer‘s liability insurance association (Berufsgenossenschaft) and fulfil the requirements of the machinery directive 2006/42/EG.

Festooned cable systems please see pages 160 - 161.

The delivered product may differ from the product shown in the image.

5-pocket load chain
sheave machined for smooth, precise chain motion.

Universal connection
to suspension hook, trolley or steel structures.

Double fall bottom block
for capacities between 3200 up to 5000 kg.

Hoist connected directly to trolley
with electric drive. Manual pull and geared trolleys also available.

Optional:
Flexible chain container made from wear resistant textile fabric.

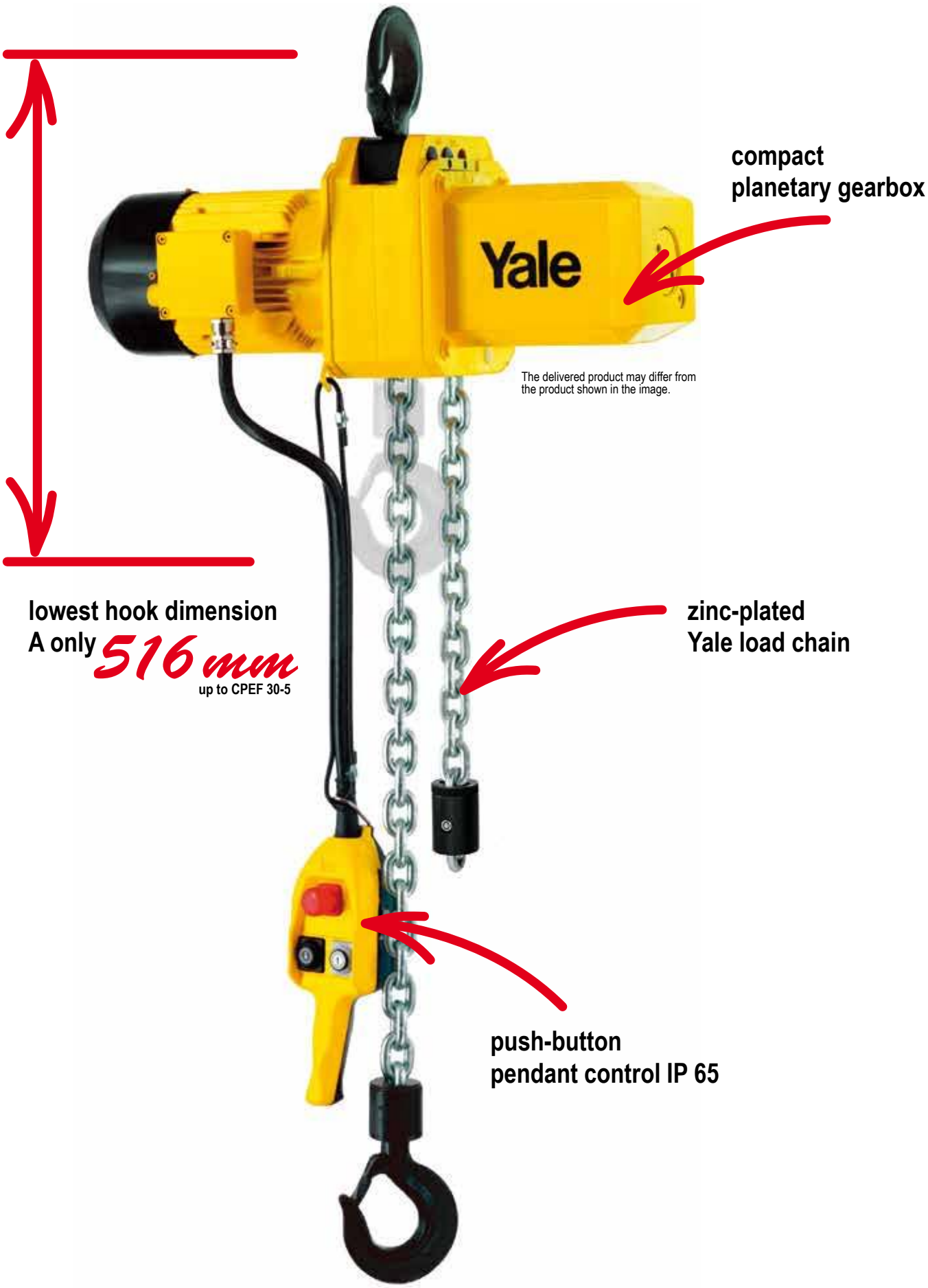
Yale
compact
planetary gearbox
The delivered product may differ from
the product shown in the image.
lowest hook dimension
A only 516 mm
up to CPEF 30-5
zinc-plated
Yale load chain
push-button
pendant control IP 65

Technical data CPEF - 400 V, 3 Ph, 50 Hz

Model	Art.-No. CPEF with suspension hook	Capacity in kg/ Number of chain falls	Chain dimensions d x p mm	Classification FEM/ISO	Lifting speed main lift m/min	Lifting speed fine lift m/min	Hoist motor rating kW	Motor rating ED %
CPEF 16-8	N06000246	1600/1	11.3 x 31	1 Am/M4	8	2	2.3/0.58	40/20
CPEF 20-8	N06000248	2000/1	11.3 x 31	1 Bm/M3	8	2	2.8/0.7	25/15
CPEF 25-5	N06000250	2500/1	11.3 x 31	1 Am/M4	5	1.25	2.3/0.58	40/20
CPEF 30-5	N06000252	3000/1	11.3 x 31	1 Bm/M3	5	1.25	2.8/0.7	25/15
CPEF 32-4	N06000254	3200/2	11.3 x 31	1 Am/M4	4	1	2.3/0.58	40/20
CPEF 40-4	N06000256	4000/2	11.3 x 31	1 Bm/M3	4	1	2.8/0.7	25/15
CPEF 50-2	N06000258	5000/2	11.3 x 31	1 Am/M4	2.5	0.6	2.3/0.58	40/20
CPEF 75-1,6	N06000278	7500/3	11.3 x 31	1 Am/M4	1.6	0.4	2.8/0.58	40/20
CPEF 100-2	N06041607	10000/4	11.3 x 31	1 Am/M4	2.5	0.6	2 x 2.3/0.58	40/20

Model	Weight at standard lift (3 m)[1] Suspension hook kg	Manual geared trolley kg	Electric trolley kg
CPEF 16-8	93	159	171
CPEF 20-8	93	159	171
CPEF 25-5	93	159	171
CPEF 30-5	93	159	171
CPEF 32-4	112	178	189
CPEF 40-4	112	178	189
CPEF 50-2	112	178	189
CPEF 75-1,6	226	326	348
CPEF 100-2	287	390	413

[1] Other lifting heights on request.

The delivered product may differ from the product shown in the image.

Technical data trolleys

Capacity kg	Size	Beam flange width b mm	Beam flange thickness t max. mm	Curve radius min. m	Electric trolley travel speed m/min at 50 Hz	Electric trolley motor kW at 50 Hz
1600 - 5000	A	98 - 180	27	2.0	11/2.8	0.3/0.09
1600 - 5000	B	180 - 300	27	1.8	11/2.8	0.3/0.09
7500 - 10000	B	125 - 310	40	1.8	5/1.25	0.55/0.12

INFO

Festooned cable systems please see pages 160 - 161.

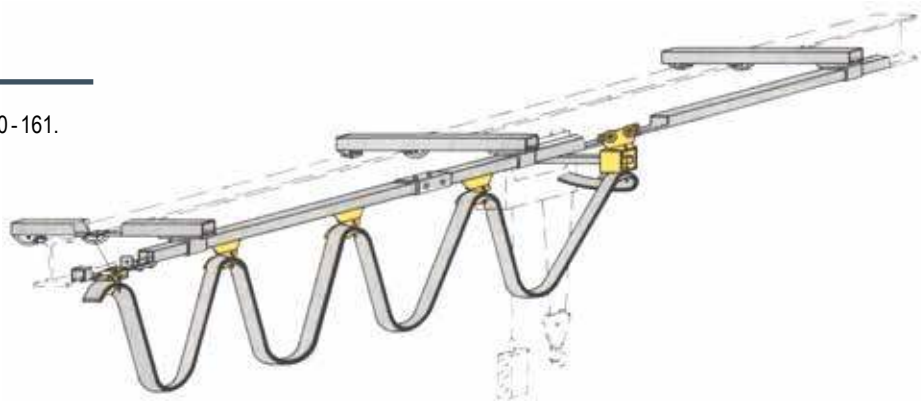

Dimensions CPE[1]/CPEF

Model	CPE[1]/CPEF 16-8	CPE[1]/CPEF 20-8	CPE[1]/CPEF 25-5	CPE[1]/CPEF 30-5	CPE[1]/CPEF 32-4	CPE[1]/CPEF 40-4	CPE[1]/CPEF 50-2	CPE[1]/CPEF 75-1,6	CPE[1]/CPEF 100-2
A, mm	516	516	516	516	681	681	681	950	1068
A1, mm	286	286	286	286	428	428	428	479	651
A2 (13 m), mm	430	430	430	430	430	430	430	–	–
A2 (21 m), mm	530	530	530	530	530	530	530	530	555
B, mm	35	35	35	35	45	45	45	60	60
C, mm	37	37	37	37	46	46	46	52	52
D, mm	24	24	24	24	30	30	30	40/45	40/45
E, mm	45/50	45/50	45/50	45/50	45/50	45/50	45/50	–	–
F1, mm	160	160	160	160	160	160	160	160	160
F2, mm	184/195	184/195	184/195	184/195	184/195	184/195	184/195	184/195	184/195
G, mm	220	220	220	220	220	220	220	220	–
G1, mm	180	180	180	180	140	140	140	293/298	340/345
G2 (13 m), mm	257	257	257	257	218	218	218	–	–
G2 (21 m), mm	277	277	277	277	238	238	238	345	408
H1, mm	110	110	110	110	110	110	110	110	135
H2, mm	135	135	135	135	135	135	135	307	256
K1, mm	100	100	100	100	100	100	100	92	92
K2, mm	51	51	51	51	51	51	51	62	62
M, mm	50	50	50	50	10	10	10	138	–
N, mm	105/110	105/110	105/110	105/110	145/150	145/150	145/150	136	390
Q1, mm	280	280	280	280	280	280	280	280	280
Q2, mm	382/438	382/438	382/438	382/438	382/438	382/438	382/438	382/438	382/438

[1] The model CPE (single speed hoist) is available on request. Please consider the deviating motor dimensions in the above table.

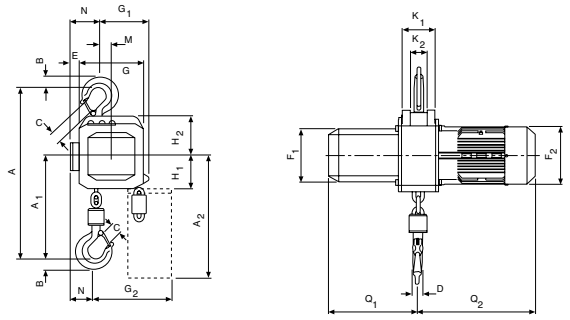

CPE[1]/CPEF with suspension hook, 1600 - 3000 kg, single fall

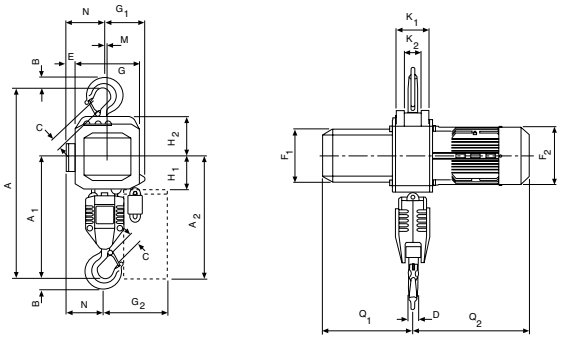

CPE[1]/CPEF with suspension hook, 3200 - 5000 kg, double fall

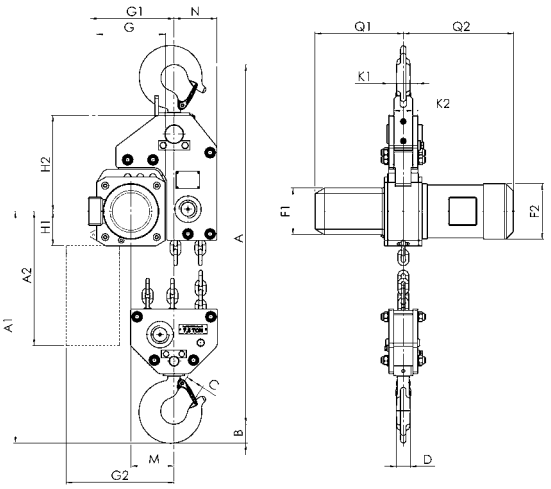

CPE[1]/CPEF 75-1,6 with suspension hook, 7500 kg

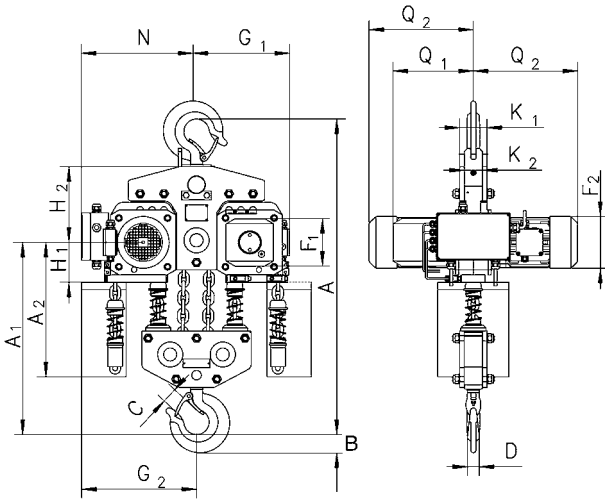

CPE[1]/CPEF 100-2 with suspension hook, 10000 kg

Dimensions CPEF

Model	CPEF 16-8	CPEF 20-8	CPEF 25-5	CPEF 30-5	CPEF 32-4	CPEF 40-4	CPEF 50-2	CPEF 75-1,6	CPEF 100-2
A3, mm	121	121	121	121	121	121	121	–	110
A4, mm	465	465	465	465	615	615	615	855	965
A5, mm	298	298	298	298	298	298	298	477	450
A6, mm	178	178	178	178	178	178	178	–	170
b, mm	A = 98 - 180/ B = 180 - 300	A = 98 - 180/ B = 180 - 300	A = 98 - 180/ B = 180 - 300	A = 98 - 180/ B = 180 - 300	A = 98 - 180/ B = 180 - 300	A = 98 - 180/ B = 180 - 300	A = 98 - 180/ B = 180 - 300	125 - 310	125 - 310
F, mm	150	150	150	150	150	150	150	113	113
I, mm	148.5	148.5	148.5	148.5	148.5	148.5	148.5	170	170
L1, mm	209	209	209	209	209	209	209	200	200
L2, mm	262.5	262.5	262.5	262.5	262.5	262.5	262.5	215	215
L3 (VTE), mm	292	292	292	292	292	292	292	–	335
L3 (VTEF), mm	296	296	296	296	296	296	296	–	335
L4, mm	213	213	213	213	253	253	253	215	390
L5, mm	312	312	312	312	272	272	272	215	215
L6 (VTE), mm	342	342	342	342	342	342	342	–	–
L6 (VTEF), mm	346	346	346	346	306	306	306	–	–
O, mm	125	125	125	125	125	125	125	150	150
P (VTE), mm	197	197	197	197	197	197	197	–	273
P (VTEF), mm	205	205	205	205	205	205	205	–	280
P1, mm	229	229	229	229	229	229	229	–	110
S, mm	b + 70	b + 70	b + 70	b + 70	b + 70	b + 70	b + 70	b + 98	b + 98
T, mm	94	94	94	94	94	94	94	–	94
tmax., mm	27	27	27	27	27	27	27	40	40

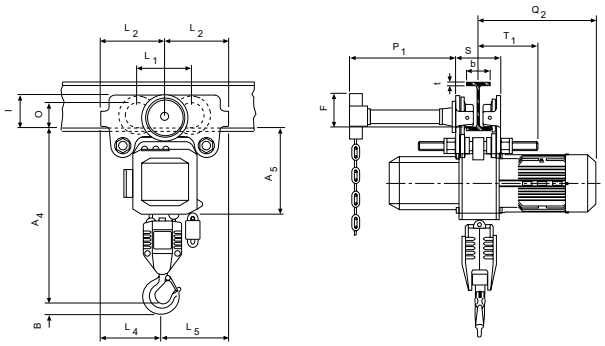

CPE[1]/CPEF with integrated manual geared trolley

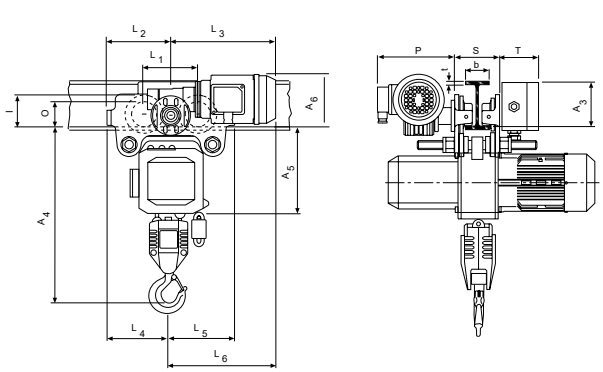

CPE[1]/CPEF with integrated electric trolley

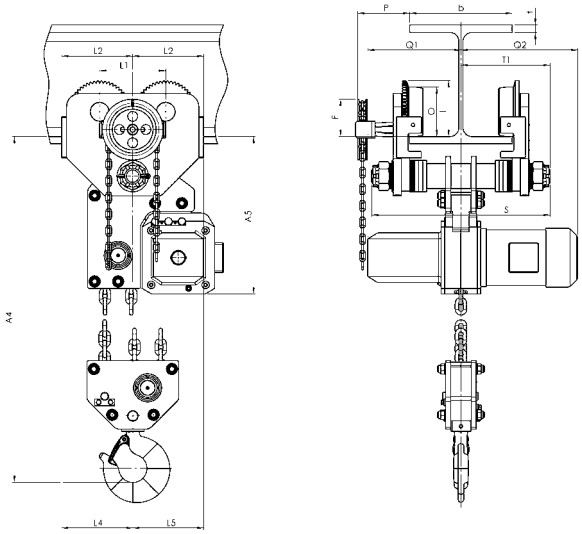

CPE[1]/CPEF with integrated geared or electric trolley, 7500 kg

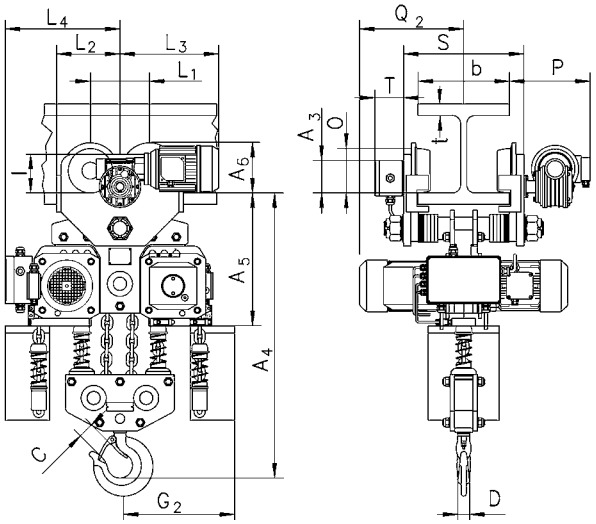

CPE[1]/CPEF with integrated electric trolley, 10000 kg

ST chain hoist

Users, crane manufacturers and systems manufacturers appreciate the robust classic which proves itself in operation day after day. It is powerful, reliable and undemanding as regards maintenance and power consumption. The supervised series production of the standard components brings you economic advantages. And in conjunction with the precise manufacture of off-standard components, the ST chain hoist is an acknowledged top level quality product.

The modular system permits numerous combinations of the sub-assemblies to achieve your individual solutions.
The ST series from STAHL CraneSystems is available in 6 load capacity variants for the load capacity range from 125 kg to 6300 kg. The chain hoists can be used as stationary models with suspension hook or eye, with rigid suspension or with a push trolley. Or when completed by an electric trolley, they are mounted on standard cranes, off-standard cranes or in systems manufacture.

The technical highlight that makes the ST chain hoist one of the safest around is its direct suspension from the solid cast iron chain guide. The chain guide integrates the load-bearing components in one component.

The STF chain hoists variant is equipped with frequency inverters from Magnetek as standard. This ensures precise, stepless lifting and travel with reliable feedback. Various off-standard designs are available for use in particular conditions. Two constructions optimise the effective hook height of all chain hoist models if required. The headroom of the short headroom trolley and extra short headroom trolley is reduced by 33 % and over 60 % respectively. For exceptional requirements, our experts in the engineering department will develop suitable customised solutions. Even in explosive atmospheres you do not have to manage without the ST chain hoist. On request, nearly the entire chain hoist programme is available in explosion-protected design for Zone 1, Zone 21 and Zone 22.

CONTACT

STAHL CraneSystems GmbH, Daimlerstr. 6, 74653 Künzelsau
T +49 7940 128-0, F +49 7940 55665, info.scs@stahlcranes.com

ST30

STK extra short headroom trolley

If you do not want to lose even a millimetre of lifting height, the STK extra short headroom trolley is just the thing for you.

The construction of the short headroom trolley itself saves a tremendous amount of space. The body of the chain hoist is mounted at an angle, meaning that no return sheave is required. This reduces the headroom by 33 %. The extra short headroom trolley with its headroom reduced by 60 %, by contrast, achieves maximum hook paths, which is particularly beneficial in extremely low-ceilinged rooms. The extremely short distance from the underside of the beam to the bed of the hook is just 210 mm at a load capacity of 5000 kg and even just 185 mm at a load capacity of 3200 kg. The chain hoists used here, mounted vertically, are based on the standard ST chain hoist programme from STAHL CraneSystems.

The innovative, patented chain guide is unique. Two separate, synchronously running chains act on a bottom hook block. The load is lifted and precisely positioned without swinging or vibration.

- Very compact dimensions for maximum use of headroom
- Specially developed for low-ceilinged rooms
- Low deadweight and low maintenance
- Load is lifted steadily and without swinging
- Trolleys with no projecting edges for steady cross travel
- Optionally with frequency inverters for lifting and travel and radio remote controls from Magnetek
- Optionally permanent electronic monitoring of the suspended loads
- Optionally available in explosion-protected design

STD dual chain hoist

The dual chain hoist is an off-standard development for long goods and loads which need to be picked up at two points. It has two load chains which are driven in synch by a single hoist motor. The distance between the hooks can be selected to suit the goods to be transported. The design means that the two running hooks running in synch lift and transport the load without dangerous tilting.

Due to the low headroom construction it is ideal where headroom is restricted. Depending on the requirements there are versions where the load hooks are either to both the right and left or only on one side of the chain hoist. For stationary use, the chain hoist, adapted to the width of the load, is mounted rigidly on a substructure. In combination with an electric trolley, the chain hoist becomes mobile.

The STD Vario dual chain hoist with its electrically adjustable distance between hooks allows goods with unequal loads or different lengths to be lifted without any problems, transported safely and positioned precisely.

- Low space requirement permitting maximum height of lift
- Two hook lead-offs running in synch on one hoist
- Synchronous lifting even with uneven loading, no tilting of the load
- Individually adapted to width of load
- Optionally with frequency inverters for lifting and travel and radio remote controls from Magnetek
- Optionally permanent electronic monitoring of the suspended loads
- Optionally available in explosion-protected design

STF chain hoist

The STF chain hoist combines the proven technology of the ST chain hoist with the advantages of the Magnetek IMPULSE® frequency inverters.

Equipped with the IMPULSE®·G+ Mini as standard, the STF chain hoist not only allows precise movements, but also provides valuable diagnostic and performance information such as the current status of the chain hoist via data exchange with IoT networks. The IMPULSE·G+ Mini frequency inverter can be connected to fieldbus systems such as Modbus, Profibus or Ethernet, making it an important step towards Industry 4.0.

The STF chain hoist is equipped with overspeed protection, standstill monitoring (SRC rotation control) and 1024 PPR tachometer. This ensures greater safety for the operator and less stress on structural, mechanical and control components. The fast programmability of the frequency inverter, also offers a safe, highly reliable and simple plug-and-play application.

- Standard with Magnetek IMPULSE·G+ Mini
- Optional frequency-controlled drive
- Simple connection to IoT networks
- Increased safety through overspeed protection and standstill monitoring (SRC rotation control)
- 1024 PPR tachometer for reliable feedback in harsh environments
- Simple plug-and-play application
- IP66 protection available as an option
- Braking resistance also optionally available in IP67

Industry-specific applications

Special industries place special hygienic and mechanical demands on the work equipment used there and thus also on crane systems and chain hoists.

The standard components can for example be adapted to many requirements in the food sector by means of special paints and biodegradable lubricants with food approval or by design in protection class IP66. The chain hoist can be used in clean rooms or in medical technology by using trolleys and load chains made of stainless steel, acid and alkali-resistant components or drip pans under the hoist and trolleys.

The extra short headroom trolley and the dual chain hoist are suitable for complex, space-saving solutions, for example in cold rooms or big bag discharge systems. All components are also available in explosion-protected versions – so even hazardous materials such as flour, grain or sugar can be transported safely.

- IP66 protection for hoists and controls
- Anti-condensation heaters against corrosion
- Stainless steel components
- Acid and alkali-resistant components
- Special paints and lubricants
- Use in harsh environments, e.g. in foundries
- Drip pans and trays
- Low-wear electronic swing damping
- Synchronous chain guides and synchronous lifting
- Explosion-protected versions

ST
Electric chain hoist with suspension hook or with integrated trolley

Capacity 250 - 2000 kg

Users, crane manufacturers and systems manufacturers appreciate the robust classic which proves itself in operation day after day. It is powerful, reliable and undemanding as regards maintenance and power consumption. The supervised series production of the standard components brings you economic advantages. And in conjunction with the precise manufacture of off-standard components, the ST chain hoist is an acknowledged top level quality product.

The modular system permits numerous combinations of the sub-assemblies to achieve your individual solutions. The ST series from STAHL CraneSystems is available in 6 load capacity variants for the load capacity range from 125 kg to 6300 kg. The chain hoists can be used as stationary models with suspension hook or eye, with rigid suspension or with a push trolley. Or when completed by an electric trolley, they are mounted on standard cranes, off-standard cranes or in systems manufacture. The technical highlight that makes the patented ST chain hoist one of the safest around is its direct suspension from the solid cast iron chain guide.

Features

- Extensive chain hoist range for lifting capacities from 125 kg to 6300 kg
- Suspension directly from the chain guide of solid cast iron
- Easy inspection and maintenance of the chain drive thanks to overmounted drive shaft
- Optionally with frequency inverters for lifting and travel from Magnetek
- Extremely short and compact construction ensures that space can be utilised to the maximum
- High ISO classification according to FEM/ISO standards
- Optionally available in explosion-protected design complying with ATEX and IECEx

INFO

STAHL CraneSystems hoists are not designed for passenger elevation applications and must not be used for this purpose.

Technical data ST - with suspension hook

Model	Art.-No.	Capacity in kg/ Number of chain falls	Lifting speed m/min	Classification FEM/ISO	Motor rating ED %	Hoist motor rating kW
ST 0502-8/2 [1]	A70109458	250 1/1	8/2	1Am/M4	35/15	0.4/0.1
ST 0502-8/2 [1]	A70109527	500 2/1	4/1	1Am/M4	35/15	0.4/0.1
ST 1005-8/2 [1]	A70109530	500 1/1	8/2	1Am/M4	40/20	0.8/0.2
ST 1005-8/2 [1]	A70109532	1000 2/1	4/1	1Am/M4	40/20	0.8/0.2
ST 2010-8/2 [2]	–	1000 1/1	8/2	2m/M5	40/20	1.5/0.37
ST 2010-8/2 [2]	–	2000 2/1	4/1	2m/M5	40/20	1.5/0.37

Technical data ST - with push trolley

Model	Art.-No.	Capacity in kg/ Number of chain falls	Lifting speed m/min	Classification FEM/ISO	Motor rating ED %	Hoist motor rating kW	Flange width mm
ST 0502-8/2 [1]	A70109528	250 1/1	8/2	1Am/M4	35/15	0.4/0.1	42-180
ST 0502-8/2 [1]	A70109528	500 2/1	4/1	1Am/M4	35/15	0.4/0.1	42-180
ST 1005-8/2 [2]	–	500 1/1	8/2	1Am/M4	40/20	0.8/0.2	42-180
ST 1005-8/2 [2]	–	1000 2/1	4/1	1Am/M4	40/20	0.8/0.2	58-300
ST 2010-8/2 [2]	–	1000 1/1	8/2	2m/M5	40/20	1.5/0.37	58-300
ST 2010-8/2 [2]	–	2000 2/1	4/1	2m/M5	40/20	1.5/0.37	66-300

Technical data ST - with geared trolley

Model	Art.-No.	Capacity in kg/ Number of chain falls	Lifting speed m/min	Classification FEM/ISO	Motor rating ED %	Hoist motor rating kW	Flange width mm	Travel speed m/min
ST 0502-8/2 [2]	–	250 1/1	8/2	1Am/M4	35/15	0.4/0.1	42-180	20/5
ST 0502-8/2 [1]	A70109540	500 2/1	4/1	1Am/M4	35/15	0.4/0.1	42-180	20/5
ST 1005-8/2 [2]	–	500 1/1	8/2	1Am/M4	40/20	0.8/0.2	42-180	20/5
ST 1005-8/2 [1]	A70109538	1000 2/1	4/1	1Am/M4	40/20	0.8/0.2	58-300	20/5
ST 2010-8/2 [2]	–	1000 1/1	8/2	2m/M5	40/20	1.5/0.37	58-300	20/5
ST 2010-8/2 [2]	–	2000 2/1	4/1	2m/M5	40/20	1.5/0.37	66-300	20/5

Supply voltage 380 – 415 V, 50 Hz (at ST 05: 380 – 400 V), operating voltage 48 VAC, contactor control with converter, control unit for 2-stage speeds, protection IP55. Optionally with travel limit switch and towing arm. Not included in scope of delivery: Limit switch, timer and temperature monitoring.
[1] Delivery time 48h ex works Wuppertal, [2] Delivery time on request

INFO

Other options on request!

Festooned cable systems please see pages 160 - 161.

CPA 10-9

CPA 1-13 / 2-10 und 5-5
CPA 10-9
Pneumatic chain hoist with suspension hook

Capacity 125 - 980 kg

Pneumatic chain hoists are characterized by high durability in a great number of industrial applications. The robust but light weight housing allows an easy transport.

Features

- Operating pressure 6 bar
- Rotating piston motor with 100 % duty rating and an unlimited number of starts for continuous operation.
- Integrated limit switches for highest and lowest hook position as standard.
- Self-adjusting automatic disc brake
- Extremely sensitive control with emergency-stop for a precise positioning of the load.
- Air release for brake as standard for CPA 10-9

Optional

- Trolleys for pneumatic chain hoists with suspension hook.
- Maintenance unit for main air supply pipe (pressure regulator, manometer, lubricator and support).
- Chain container

Applications

Automobile and aircraft industries, shipyards, on ships and docks. Foundries, on-/offshore, paint factories and paint shops, refineries, oil depots, galvanizing. Printing, textile and food industries, pulp, paper and cement mills. Glass and ceramic industries, wood working industries, chemical industries, heat treatment and power plants etc.

Explosion-proof version corresponds to Basic.

INFO

To ensure faultless operation the compressed air supply must be filtered and oiled!

Also suitable for operation with nitrogen.

Yale hoists and trolleys are not designed for passenger elevation applications and must not be used for this purpose.

Technical data CPA

Model	Art.-No.	Capacity in kg/ Number of chain falls	Chain dimensions d x p in mm/ design	Classification FEM/ISO	Lifting speed with rated load [1] m/min	Lifting speed without load [1] m/min	Lowering speed with rated load [1] m/min	Air consumption with rated load [1] m³/min	Hoist motor rating kW	Weight at 3 m Hub kg
CPA 1-13	N08501007	125/1	4 x 12.2 - DAT	1 Am/M4	13.1	17.1	11.3	0.9	0.4	15.4
CPA 2-10	N08501008	250/1	4 x 12.2 - DAT	1 Am/M4	9.8	17.1	13.7	0.9	0.4	15.4
CPA 5-5	N08501010	500/2	4 x 12.2 - DAT	1 Am/M4	4.6	7.9	6.7	0.9	0.4	17.2
CPA 10-9	N08501012	980/2	6.3 x 19.5 - DAT	1 Bm/M3	8.5	16.2	14.9	1.27	1.33	27.7

[1] Values for 6.3 bar flow pressure and 2 m control drop. Speeds will be reduced in case of longer control length.
CPA 1-13, CPA 2-10 and CPA 5-5 max. hose length 12 m, air supply 3/8" NPT, air consumption 0.9 m³/min.
CPA 10-9 max. hose length 20 m, air supply 1/2" NPT, air consumption 2.1 m³/min.

Dimensions CPA

Model	CPA 1-13	CPA 2-10	CPA 5-5	CPA 10-9
A, mm	292	292	324	457
A1, mm	410	410	410	508
B, mm	21	21	14	27
C, mm	20	20	24	28
D, mm	16	16	14	28
F1, mm	90	90	90	130
F2, mm	120	120	120	180
K, mm	103	103	103	165
L, mm	57	57	57	83
M, mm	120	120	120	135
N, mm	50	50	50	25
Q1, mm	142	142	142	162
Q2, mm	183	183	183	181

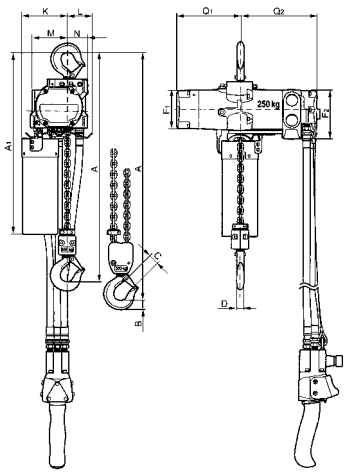

CPA 1-13 / 2-10 / 5-5

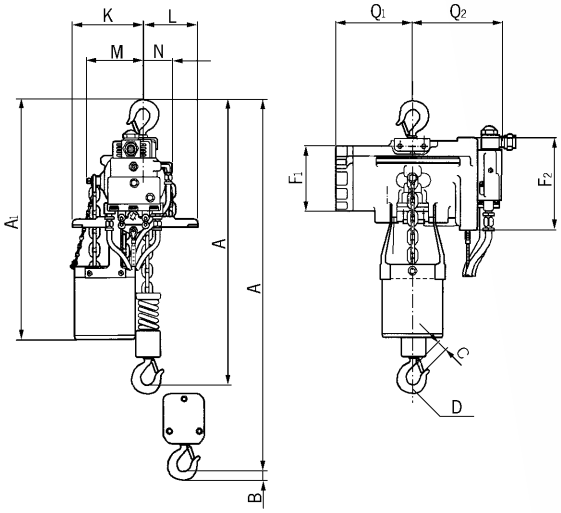

CPA 10-9

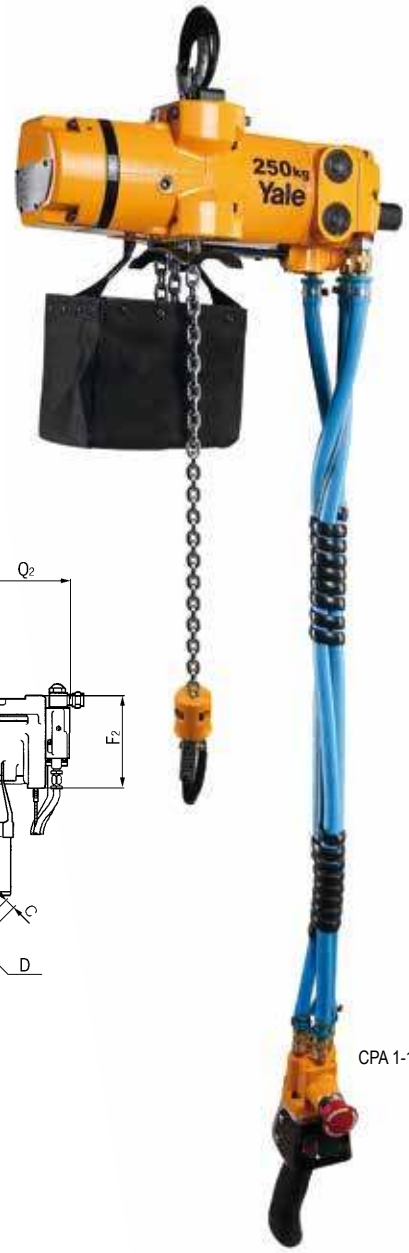

CPA 1-13

Image shows BASIC design

CPA ATEX Basic Pneumatic chain hoist with suspension hook or with integrated trolley

Capacity 2000 - 10000 kg

With 100 % duty rating and an unlimited number of starts the model CPA is suitable for heavy duty applications. It is insusceptible to contamination, humidity and aggressive mediums from the outside.
The hoists are composed of three main components which makes service easy and inexpensive.

Features

- Working pressures 4 - 6 bar.
- Robust rotating piston motor has an adjustable spring pressure brake that holds the load secure even in the event of an air failure.
- The standard, oil bath lubricated planetary gearbox is particularly smooth running and enables a low overall height.
- High starting torque due to switching valves in the motor body.
- Low noise emission due to large dimension silencer.
- Sensitive control by means of 2 resp. 4 button pendant control with emergency-stop.
- The assembly of component parts result in a low overall height (up to 3000 kg only one chain fall).
- The 5-pocket load chain sheave, manufactured from wear resistant case hardening steel, is matched perfectly to the load chain to guarantee smooth and precise chain motion.
- Forged suspension and load hooks are made from non-aging, high tensile steel and fitted with robust safety latches.
- The standard case hardened and zinc-plated link chain is matched perfectly to the load chain to guarantee smooth and precise chain motion.
  All requirements of national and international standards and regulations are fulfilled.

Optional

- Also available in combination with trolleys, both trolley/hook suspension and with integrated trolley.
  Also applies to Atex.
- Rope control
- Limit switch
- Chain container
- Maintenance unit, consisting of pressure regulator, pressure gauge, lubricator and holder.
- Mobile maintenance unit
- Stainless steel load chain.

INFO

To ensure faultless operation the compressed air supply must be filtered and oiled!

Also suitable for operation with nitrogen.

Where no maintenance unit can be installed permanently, it is recommended to work with a mobile maintenance unit.

Information about chains see pages 90 - 92.

Technical data CPA ATEX Basic

Model	Art.-No.	Capacity in kg/ Number of chain falls	Chain dimensions d x p in mm/ design	Classification FEM/ISO	Lifting speed with rated load[1] m/min	Lifting speed without load[1] m/min	Lowering speed with rated load[1] m/min	Hoist motor rating kW
CPA ATEX 20-8	N08505001	2000/1	11.3 x 31 - DAT	1 Bm/M3	7.4	9.9	11.0	2.6
CPA ATEX 30-6	N08505002	3000/1	11.3 x 31 - DAT	1 Bm/M3	6.0	9.9	13.0	3.2
CPA ATEX 50-3	N08505004	5000/2	11.3 x 31 - DAT	1 Am/M4	3.4	5.0	6.0	3.0
CPA ATEX 60-3	192069175	6000/2	11.3 x 31 - DAT	1 Am/M4	3.0	5.0	6.5	3.2
CPA ATEX 75-2	N08505005	7500/3	11.3 x 31 - DAT	1 Am/M4	2.0	3.3	4.3	3.2
CPA ATEX 100-3	N08505006	10000/4	11.3 x 31 - DAT	1 Am/M4	3.4	5.0	6.0	2 x 3.0

[1] Values at 6 bar flow pressure and 2 m control hose. Air consumption at nominal load 4.7 m³/min. For CPA 100-3 = 9.4 m³/min, air connection R1".
Quick exhaust valves are installed from 11 m upwards, max. hose length 20 m.

Model	Art.-No.	Weight[2] suspension hook kg	Weight[2] geared trolley kg	Weight[2] pneumatic trolley kg
CPA ATEX 20-8	N08505001	121	188	199
CPA ATEX 30-6	N08505002	121	188	199
CPA ATEX 50-3	N08505004	140	206	218
CPA ATEX 60-3	192069175	140	206	218
CPA ATEX 75-2	N08505005	on request	on request	on request
CPA ATEX 100-3	N08505006	on request	on request	on request

[2] Weight at standard lift 3 m. Other lifting heights on request.

INFO

Yale hoists and trolleys are not designed for passenger elevation applications and must not be used for this purpose.

INFO

Also available in Medium, High design on request.

We are pleased to send you our new Atex catalogue in PDF format.

Image shows MEDIUM design incl. rope control

Application with pneumatic trolley

Mobile maintenance unit

Technical data trolleys

Capacity kg	Size	Beam flange width b mm	Beam flange thickness t max. mm	Curve radius min. m	Pneumatic trolley travel speed m/min	Pneumatic trolley motor kW
2000 - 6000	A	98 - 180	27	2.0	18	0.55
2000 - 6000	B	180 - 300	27	1.8	18	0.55
7500 - 10000	B	125 - 310	40	1.8	–	–

Flow pressure 6 bar, air consumption with rated load 0.75 m³/min, air connection R½".

Dimensions CPA

Model	CPA 20-8	CPA 30-6	CPA 50-3	CPA 60-3	CPA 75-2	CPA 100-3
A, mm	516	516	681	681	950	1068
A1, mm	286	286	428	428	479	651
B, mm	35	35	45	49	60	60
C, mm	37	37	46	44	52	52
D, mm	24	24	30	30	40/45	40/45
F1, mm	160	160	160	160	160	160
F2, mm	165	165	165	165	165	165
G, mm	220	220	220	220	220	581
G1, mm	180	180	140	140	268	311
G2 (13 m), mm	258	258	218	218	–	–
G2 (21 m), mm	278	278	238	238	345	408
H1, mm	110	110	110	110	110	110
H2, mm	135	135	135	135	307	256
H3, mm	115	115	115	115	115	115
K1, mm	100	100	100	100	92	92
K2, mm	51	51	51	51	62	62
M, mm	50	50	9.6	9.6	139	181
N, mm	60	60	100	100	136	291
Q1, mm	272	272	272	272	272	272
Q2, mm	325	325	325	325	325	325

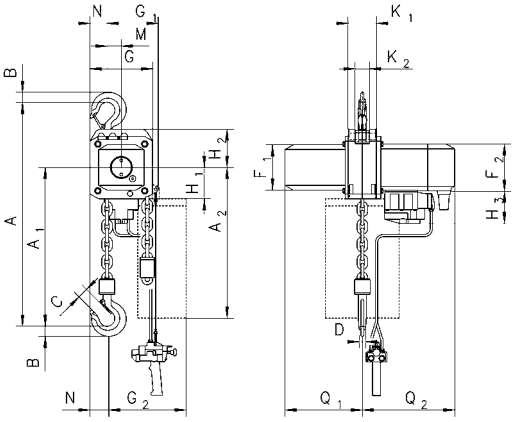

CPA with suspension hook, 2000 - 3000 kg, single fall

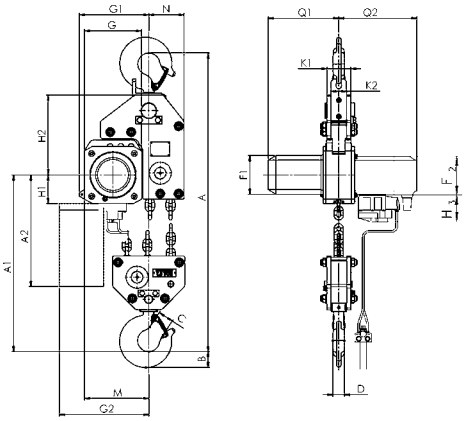

CPA with suspension hook, 7500 kg, three falls

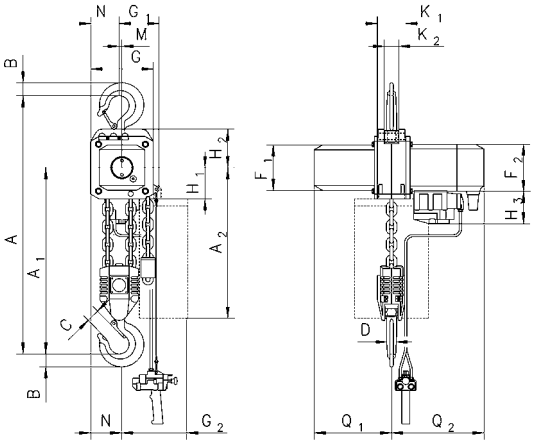

CPA with suspension hook, 4000 - 5000 kg, double fall

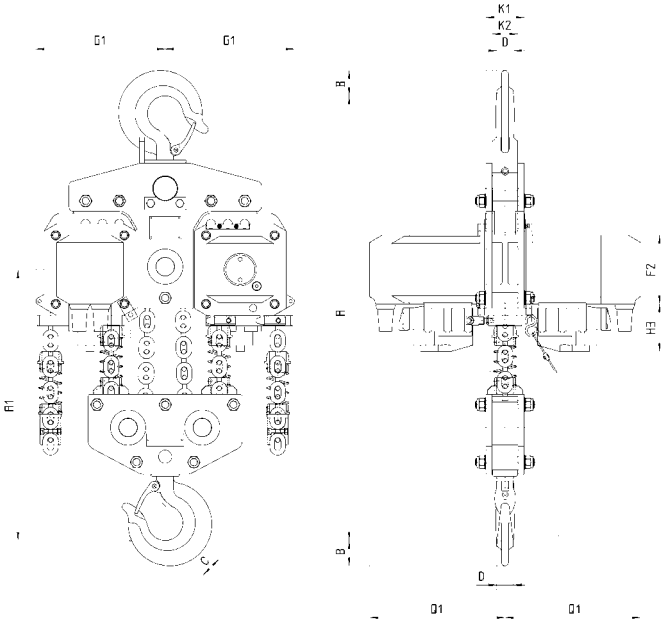

CPA with suspension hook, 10000 kg, four falls

Dimensions CPA

Model	CPA 20-8	CPA 30-6	CPA 50-3	CPA 60-3	CPA 75-2	CPA 100-3
A2 (13 m), mm	430	430	430	430	–	–
A2 (21 m), mm	530	530	530	530	530	530
A4, mm	465	465	615	615	855	965
A5, mm	298	298	298	298	477	425
A6, mm	190	190	190	190	182	182
b, mm	A = 98 - 180/ B = 180 - 300	A = 98 - 180/ B = 180 - 300	A = 98 - 180/ B = 180 - 300	A = 98 - 180/ B = 180 - 300	125 - 310	125 - 310
F, mm	150	150	150	150	113	113
I, mm	142.5	142.5	142.5	142.5	130	130
L1, mm	209	209	209	209	200	200
L2, mm	262.5	262.5	262.5	262.5	215	215
L3, mm	265	265	265	265	265	265
L4, mm	213	213	253	253	291	291
L5, mm	312	312	272	272	–	–
L6, mm	315	315	275	275	–	–
O, mm	125	125	125	125	150	150
P, mm	208	208	208	208	208	208
P1, mm	284	284	284	284	284	284
S, mm	b + 70	b + 70	b + 70	b + 70	b + 98	b + 98
t, mm	27	27	27	27	40	40
T1 size A	182	182	182	182	–	–
T1 size B	242	242	242	242	270	270

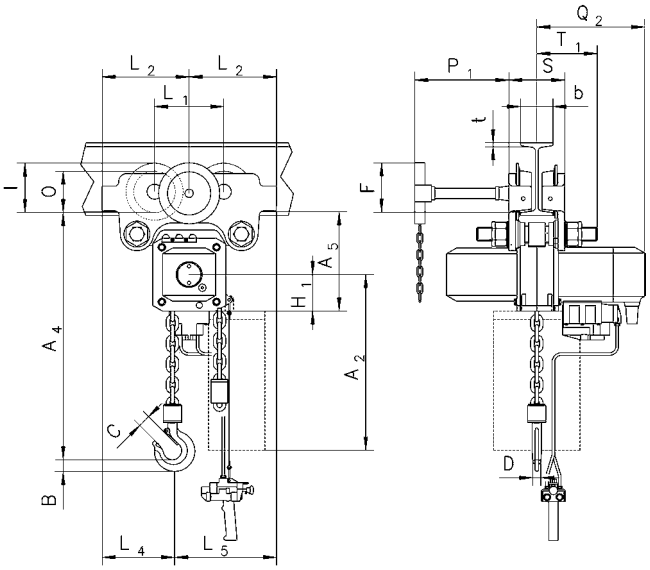

CPA with integrated manual geared trolley

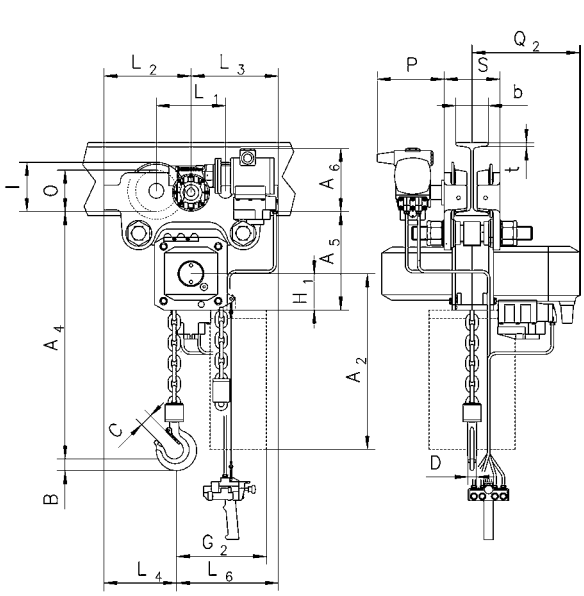

CPA with integrated pneumatic trolley

Yale and STAHL CraneSystems link chains, zinc-plated

for	Art.-No.	Capacity kg	Number of chain falls	Chain dimensions d x p mm	Chain stop
D85	N01607633	750	1	6 x 18.5	•
	N01607645	1500	1	9 x 27	•
	N01607652	3000	1	11 x 31	•
	N01607652	6000	2	11 x 31	•
	N01607652	10000	3	11 x 31	•
Yale*ERGO 360*	N02109357	750	1	5.6 x 17.1	•
Yale*ERGO 360 UT*	192034634	1500	1	7.1 x 21	•
UNO*plus-A*	192046315	3000	1	10 x 28	•
	192046315	6000	2	10 x 28	•
	192046315	9000	3	10 x 28	•
AL	N02107637	750	1	6.3 x 19.1	•
	N02107637	1000	1	6.3 x 19.1	•
	N02107639	1500	1	7.1 x 21.2	•
	N02107649	3000	1	10 x 30.2	•
PT-A	N02109357	800	1	5.6 x 17.1	•
	N02107639	1600	1	7.1 x 21.2	•
	N02109358	3200	1	9 x 27.2	•
	N02109358	6300	2	9 x 27.2	•
UNO*plus*	N04307635	750	1	6 x 18	•
Silverline HZ S	N04307642	1500	1	8 x 24	•
	N04307647	3000	1	10 x 30	•
	N04307647	6000	2	10 x 30	•
Yale*handy*	N02100004	250	1	4 x 12	–
	N02100009	500	1	4 x 12	–
Yale*MINI 360*	192084202	250	1	3 x 9	–
	N02100004	500	1	4 x 12	–
Yale*lift 360*	N04300008	500	1	5 x 15	–
	N04307635	1000	1	6 x 18	•
	N04307642	2000	1	8 x 24	•
	N04300013	3000	1	10 x 30	•
	N04307647	5000	2	10 x 30	•
	N04300013	10000	3	10 x 30	•
	N04300013	20000	6	10 x 30	•
VS*III*	N02100004	250	1	4 x 12	–
Silverline Stira S*	N04300008	500	1	5 x 15	–
	N04307635	500*/1000*	1	6 x 18	•
	N04307642	1500*	1	8 x 24	•
	N04307635	2000	2	6 x 18	•
	N04307642	2000*	1	8 x 24	•
	N04307642	3000*	2	8 x 24	•
	N04307647	3000	1	10 x 30	•
	N04307647	5000*	2	10 x 30	•
	N04307647	10000	4	10 x 30	•
	N04307647	20000	8	10 x 30	•
	N04307647	30000	12	10 x 30	•
	N04307647	50000	18	10 x 30	•
CPV/F	N07600001	125/250	1	4 x 12.2	–
	N07600001	500	2	4 x 12.2	–
	N06900001	500	1	5 x 15.1	–
	N06900001	1000	2	5 x 15.1	–
	N06900002	1000	1	7.1 x 20.5	–
	N06900002	2000	2	7.1 x 20.5	–
	N06109488	2500	1	11 x 31	–
	N06109488	5000	2	11 x 31	–
ST 5 / STD 5	A3310059	320/630	1/2	4 x 12	–
ST 10 / STD 10	A3310069	500/1000	1/2	5 x 16	–
ST 20 / STD 30	A3310019	1000/2000	1/2	7 x 21.9	–
ST 30 / ST 32 STD 50 / STD 60	A3310049	1600/3200	1/2	9 x 27	–
ST 50	A3310139	2500/5000	1/2	11.3 x 31	–
ST 60	A3310239	3200/6300	1/2	11.3 x 31	–

Yale and STAHL CraneSystems link chains, zinc-plated

for	Art.-No.	Capacity kg	Number of chain falls	Chain dimensions d x p mm	Chain stop
CPA	N07600001	125-250	1	4 x 12.2	–
	N07600001	500	2	4 x 12.2	–
	N08600024	980	2	6.3 x 19.5	•
CPEF	N06109488	1600 - 3000	1	11.3 x 31	–
CPA	N06109488	3200 - 6000	2	11.3 x 31	–
	N06109488	7500	3	11.3 x 31	–
	N06109488	10000	4	11.3 x 31	–

Yale and STAHL CraneSystems link chains, stainless steel

for	Art.-No.	Capacity kg	Capacity max. stainless steel load chain kg	Number of chain falls	Chain dimensions d x p mm	Chain stop
D85	N01607646	1500	1500	1	9 x 27	•
AL	N02107638	750	750	1	6.3 x 19.1	•
	N02107638	1000	1000	1	6.3 x 19.1	•
	N02107640	1500	1250	1	7.1 x 21.2	•
	N02107650	3000	2000	1	10 x 30.2	•
UNO*plus*	N04307636	750	750	1	6 x 18	•
	N04307643	1500	1250	1	8 x 24	•
	N04307648	3000	2000	1	10 x 30	•
	N04307648	6000	4000	2	10 x 30	•
Yale*lift 360*	N07218304	500	500	1	5 x 15	–
	N04307636	1000	900	1	6 x 18	•
	N04307643	2000	1500	1	8 x 24	•
	N04307648	3000	2500	1	10 x 30	•
	N04307648	5000	5000	2	10 x 30	•
VS*III*	N07218304	500	500	1	5 x 15	–
	N04307636	1000	900	1	6 x 18	•
	N04307643	1500	1500	1	8 x 24	•
	N04307636	2000	1800	2	6 x 18	•
	N04307643	2000	1500	1	8 x 24	•
	N04307643	3000	3000	2	8 x 24	•
	N04307648	3000	2500	1	10 x 30	•
	N04307648	5000	5000	2	10 x 30	•
	N04307648	10000	10000	4	10 x 30	•
	N04307648	20000	20000	8	10 x 30	•
	N04307648	30000	30000	12	10 x 30	•
	N04307648	50000	45000	18	10 x 30	•
CPV/F	N07600002	125/250	125/250	1	4 x 12.2	–
	N07600002	500	500	2	4 x 12.2	–
	N06900012	500	500	1	5 x 15.1	–
	N06900012	1000	1000	2	5 x 15.1	–
	N06900013	1000	800	1	7.1 x 20.5	–
	N06900013	2000	1600	2	7.1 x 20.5	–
ST 5 / STD 5	A3319459	125/250	200/400	1/2	4 x 12	–
ST 10 / STD 10	A3319259	200/400	320/630	1/2	5 x 16	–
ST 20 / STD 30	A3319279	400/800	630/1250	1/2	7 x 21.9	–
ST 30 / ST 32 STD 50 / STD 60	A3319289	630/1250	1000/2000	1/2	9 x 27	–
ST 50 / ST 60	A3310159	1000/2000	1600/3200	1/2	11.3 x 31	–
CPA	N07600002	125/250	125/250	1	4 x 12.2	–
	N07600002	500	500	2	4 x 12.2	–
	N08600025	980	980	2	6.3 x 19.5	•
CPEF	N06100001	1600/2000	1600/2000	1	11.3 x 31	–
CPA	N06100001	2500/3000	2000	1	11.3 x 31	•
	N06100001	3200/4000	3200/4000	2	11.3 x 31	•
	N06100001	5000/6000	4000	2	11.3 x 31	•
	N06100001	7500	6000	3	11.3 x 31	•
	N06100001	10000	8000	4	11.3 x 31	•

Yale roller chains

for	Art.-No.	Capacity in kg/ Number of chain falls	Chain dimensions p x b inch	Chain stop
C 85	N01244800	750/1	5/8" x 3/8"	•
	N01245700	1500/1	1" x 1/2"	•
	N01245701	3000/1	1 1/4" x 5/8"	•

Yale hand chains, zinc-plated or stainless steel

for	Chain dimensions d x p in mm	Art.-No. zinc-plated	Art.-No. stainless steel
HTG, VS*plus*, VS*III*, Yale*lift 360*	5 x 26	N04307654	N04307655
- Connection link for hand chain	5 x 26	N00404733	N00400668
VS*III 250*, Yale*MINI 360*	3 x 15	N04300019	–
- Connection link for hand chain	3 x 15	N00440172	–

stainless steel

zinc-plated

INFO

The chain claw - the simple alternative. Fast and practical.

KKL Yale chain claw for round link chains

Model	Art.-No.	Capacity kg	Suitable for chain-Ø mm
KKL 2000	192080829	2000	7 - 8
KKL 3150	192080830	3150	10

The use for different chain dimensions is not permitted.

KKL Yale chain claw for round link chains

The KKL also offers the operator additional safety with dynamic loads!
Due to the lack of additional mechanical locking, the chain claw can be moved faster than the chain stop.
It replaces the chain end piece and thus saves additional weight!

Here too, the attachment point should be as close to the housing as possible, for optimal safety.

YKST Yale chain stop for round link or roller chains

The Yale chain stop is designed to be used as an additional fall arrester for round link and roller chains. Especially where oscillations and vibrations could cause the load chain to slip, chain stops can reliably increase safety! For this purpose, the chain stopper YKST should be positioned as close as possible to the housing of the unit and should be repositioned after the hoist has been operated so that the dynamics are as low as possible. After pressing the slider, the chain stopper can be moved on the load chain of the hoist and locks itself by means of spring force after positioning on the chain. The YKST can only be actively unlocked by the release mechanism of the actively unlocked by the release mechanism of the slider. **This prevents accidental loosening during operations!**

Chain stop attached to roller chain

Chain stop attached to link chain

INFO

The nominal load marked on the chain stopper is the max. load, that each single chain fall can lift, but not the nominal load of the hoist for example model D 85, 10 t, three chain falls, satisfy 3334 kg per chain fall.

INFO

The Yale chain stop - proven in use for more than 10 years!

The YKST was developed especially for the requirements in overhead line construction and was then dynamically tested by an independent body!

YKST Yale chain stop for link chains

Model	Art.-No.	Capacity kg	Suitable for chain-Ø mm	Dimension L x W x D mm
YKST 1600	N00100115	1600	5.6 - 8	75 x 56 x 15
YKST 3200	N00100110	3400	9 - 11	105 x 82 x 24

The use for different chain dimensions is not permitted.

YKST Yale chain stop for roller chains

Model	Art.-No.	Capacity kg	Suitable for chain-Ø
YKST 750	N00100146	750	5/8" x 3/8"
YKST 1500	N00100143	1500	1" x 1/2"
YKST 3400	N00100156	3400	1 1/4" x 5/8"

The use for different chain dimensions is not permitted.

80 - 125 kg

300 - 750 kg

SW-W
Wall-mounted winch

Capacity 80 - 750 kg

Wall-mounted rope winches of the SW-W model range are intended for fixed stationary mounting inside a building. The steel wire rope is guided to the required suspension point of the load by means of deflection sheaves.

Features

- Robust aluminium housing for models SW-W 80 and SW-W 125, proven steel plate design for models SW-W 300 - 750.
- Spur gear drive for optimal efficiency and comfortable handling. Direct drive for loads up to 125 kg.
- The low-noise safety spring brake safely holds the load in every position.
- Removable hand crank for models SW-W 80 and SW-W 125, foldable crank for models SW-W 300 - 750.
- Easy and quick mounting onto walls.

Technical data SW-W

Model	Art.-No.	Capacity 1st layer kg	Capacity top layer kg	Drum diameter mm	Rope diameter[1] mm	Useable rope length 1st layer m	Useable rope length top layer m	Lift per crank rotation mm	Required crank effort daN	Weight without rope kg
SW-W 80	N040271017	80	45	51	3	2.4	30	170	12	3
SW-W 125	N040271008	125	65	40	4	2	12	138	13	3
SW-W 300	30271001	300	220	108	5	2.1	15	68	15	10
SW-W 500	30271136	500	350	108	6	2.4	15	35	13	11
SW-W 750	30271019	750	550	108	7	2	10	35	20	11

[1]recommended rope: DIN EN 12385 FE-znk 1770 sZ-spa

Dimensions SW-W

Model	SW-W 80	SW-W 125	SW-W 300	SW-W 500	SW-W 750
A, mm	110	110	250	250	250
B, mm	110	110	250	250	250
C, mm	130	130	290	290	290
D, mm	130	130	290	290	290
Ø E, mm	9	9	14.5	14.5	14.5
F, mm	15	15	2	2	2
H, mm	121	121	85	85	85
I, mm	55	55	138	138	138
J, mm	–	–	117	117	117
K, mm	250	250	250	250	250
L, mm	130	130	130	130	130
M, mm	68	68	39	39	39
O, mm	60	60	50	50	50
P, mm	275	275	192	192	192

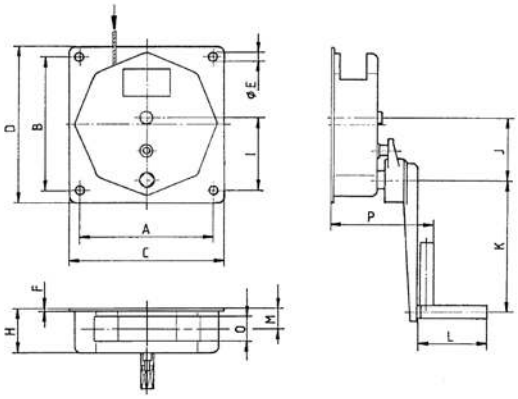

SW-W ALPHA
Wall-mounted winch

Capacity 300 - 1000 kg

A versatile wall-mounted winch for an easy lifting of loads.

Features

- Light weight robust stamped steel housing and compact design.
- Spur gear drive for optimal efficiency and comfortable handling.
- Rope lead-offs to all directions.
- All parts are zinc-plated for increased corrosion protection, drum with additional special coating.
- Integrated crank with load pressure brake for safe holding of the load.
- Easy and quick mounting onto walls.

INFO

For a better guiding of the rope to the suspension point we recommend the use of sheaves or sheave blocks, please see page 105.

View x
M 1:2,5

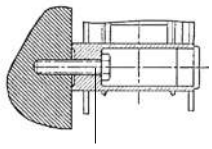

Fastening screws
to be fastened with M12
bolts quality class 8.8
(not included)

Technical data SW-W ALPHA

Model	Art.-No.	Capacity 1st layer kg	Capacity top layer kg	Drum length mm	Rope diameter [1] mm	Useable rope length 1st layer m	Useable rope length top layer m	Lift per crank rotation mm	Required crank effort daN	Weight without rope kg
SW-W ALPHA 300	30272006	300	130	50	5	1,3	28	57	13	10
SW-W ALPHA 500	30272005	500	230	50	6	1	20	55	17	10
SW-W ALPHA 750	30272002	750	270	50	7	1	26	45	17	16
SW-W ALPHA 1000	30272001	1000	360	50	7	1	26	45	18	16

[1] recommended rope: DIN EN 12385 FE-znk 1770 sZ-spa

Dimensions SW-W ALPHA

Model	SW-W ALPHA 300	SW-W ALPHA 500	SW-W ALPHA 750	SW-W ALPHA 1000
A, mm	234	234	306	306
B, mm	262	262	337	337
C, mm	274	274	357	357
D, mm	203	203	265	265
E, mm	107	107	107	107
F, mm	194	194	194	194
G, mm	183	183	255	255
Ø H, mm	63	63	63.5	63.5
I, mm	200	250	250	320
J, mm	58.6	58.6	92.5	92.5
K, mm	109.5	109.5	107	107

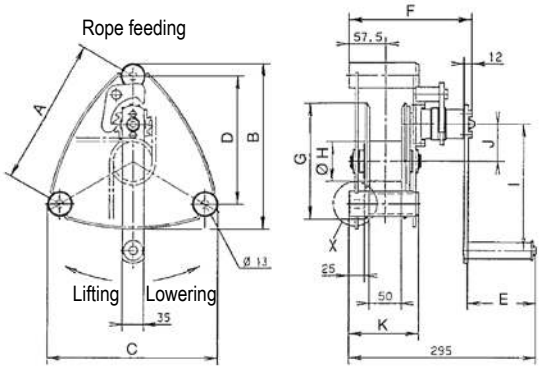

SW-W-SGO-S
Capacity 1500 kg

SW-W-SGO-S Wall-mounted winch with worm gear drive

Capacity 250 - 5000 kg

Wall-mounted winch with worm gear drive and load pressure brake for efficient lifting of heavy loads.

Features

- Housing and rope drums made out of robust steel plate.
- Worm gear drive with additional load pressure brake for safe holding of the load.
- Roller bearings ensure smooth running of the rope and increased lifetime of the winch.
- Second speed for fast lifting of smaller loads, resulting in lowest possible handle effort and rapid winding of the rope (for capacitites of 2000 kg and above).
- Wide rope drum for a large rope capacity with two rope attachment points.
- Easy and quick mounting.

Technical data SW-W-SGO-S

Model	Art.-No.	Capacity 1st layer kg	Capacity top layer kg	Rope diameter[1] mm	Useable rope length 1st layer m	Useable rope length top layer m	Lift per crank rotation mm	Required crank effort daN	Weight without rope kg
SGO-S 250	192104964	250	114	4	5.1	81	14	12	11
SGO-S 500	192104965	500	256	6	4.9	66	11	15	15
SGO-S 1000	192101966	1000	502	8	5.8	75	10	24	23
SGO-S 1500	192104967	1500	846	10	4.2	46	9	24	33
SGO-S 2000	192104968	2000	1038	12	5.4	64	3/8[2]	13/45[2]	63
SGO-S 3000	192104969	3000	1667	14	5.7	76	2/8[2]	16/55[2]	89
SGO-S 5000	192104970	5000	3276	18	5.2	49	2/8[2]	16/85[2]	124

[1] recommended rope: DIN EN 12385 FE-znk 1770 sZ-spa [2] 1st/2nd speed

Dimensions SW-W-SGO-S

Model	SGO-S 250	SGO-S 500	SGO-S 1000	SGO-S 1500	SGO-S 2000	SGO-S 3000	SGO-S 5000
A, mm	238	262	302	302	410	436	436
B, mm	145	160	195	250	310	380	467
C, mm	100	115	141	178	196	251	316
D, mm	192	223	254	254	360	386	386
G, mm	90	88	104	108	135	145	143
H, mm	128	148	158	162	173	203	200
Ø J, mm	60	68	101	102	133	162	219
Ø K, mm	11	14	17	17	25	25	25
Ø L, mm	136	160	242	240	312	375	437
M, mm	191	209	266	278	383	480	515
N, mm	15	15	15	15	45	47	60
O, mm	364	382	438	451	694	791	826
P, mm	280	325	350	350	380	380	380
R, mm	162	189	274	312	417	526	613
S, mm	128	128	128	128	216	216	216

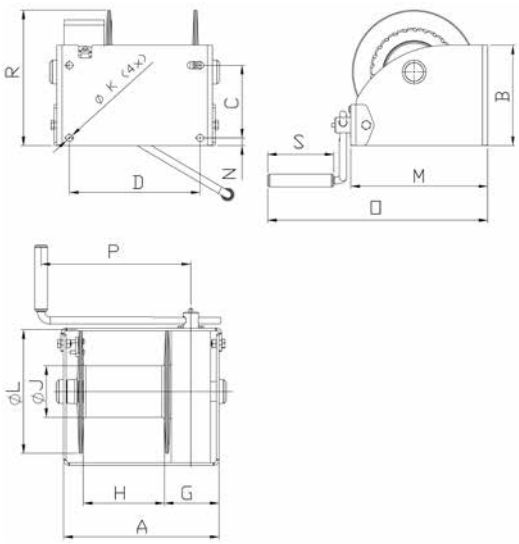

MWS
Manual winch
with spur gear drive

Capacity 150 - 1500 kg

For the operation where no electricity is available or in a dirty environment.

Recommended rope diameter according to
EN 12385 FE-znk 1770 sZ-spa.
The rope is not included in the delivery.

Features

- Enclosed gear drive for protection of internal parts, even under tough working conditions.
- Spur gears on roller bearings, rope drum on plain bearings.
- Compact design.
- Easy and quick mounting onto walls, poles etc.
- They have a self-locking, anti-kickback and adjustable crank handle for fast lifting of smaller loads, resulting in lowest possible handle effort and rapid winding of the rope.
- Automatic load pressure brake for safe holding and extremely sensitive lowering of the load. Unintentional brake release is prevented even with swinging loads.
- They are suitable for operation in ambient temperatures of - 10 °C up to + 50 °C.

Optional

- Corrosion resistant version.

MWS 1000 - 1500

MWS 300 - 600

MWS 150

INFO

For a better guiding of the rope to the suspension point we recommend the use of sheaves or sheave blocks, please see page 105.

Pfaff winches are not designed for passenger elevation applications and must not be used for this purpose.

Technical data MWS

Model	Art.-No.	Capacity 1st layer kg	Capacity top layer kg	Crank effort 1st layer daN	Lift per crank rotation 1st layer mm	Lift per crank rotation top layer mm	Weight without rope kg	Rope diameter[1] mm	Useable rope length 1st layer m	Useable rope length max. m	Number of layers max.
MWS 150	N02800013	150	67	11	122	210	4	4	0.8	13	8
MWS 300	N02800014	300	172	6	32	44	10	4	1.8	35	7
MWS 600	N02800015	600	366	10	28	41	11	6	1.2	12	6
MWS 1000	N02800018	1000	614	11	20	27	27	8	3.0	33	5
MWS 1500	N02800019	1500	927	12	14	19	27.5	10	2.7	21	5

[1] recommended rope: DIN EN 12385 FE-znk 1770 sZ-spa

Dimensions MWS

Model	MWS 150	MWS 300	MWS 600	MWS 1000	MWS 1500
A, mm	65	200	200	219	219
B, mm	168	300	300	250	250
C, mm	128	268	268	212	212
D, mm	40	168	168	150	150
E, mm	303	318	318	484	484
F, mm	–	–	–	250	250
G, mm	26	–	–	30	30
H, mm	41	55	55	113	113
I, mm	–	–	–	170	170
Ø J, mm	35	70	60	102	102
K, mm	9	12	12	17	17
Ø L, mm	102	145	145	212	212
M, mm	168	182	182	130	130
N, mm	89	199	199	338	338
O, mm	92	96	96	44	44
P, mm	–	–	–	104	104
Q, mm	–	–	–	190	190
S, mm	129	129	129	129	129

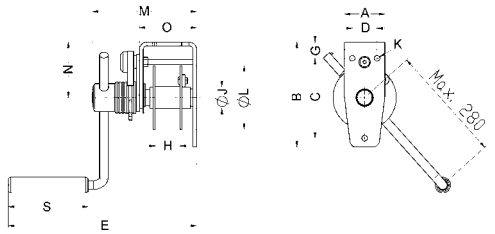

MWS, capacity 150 kg

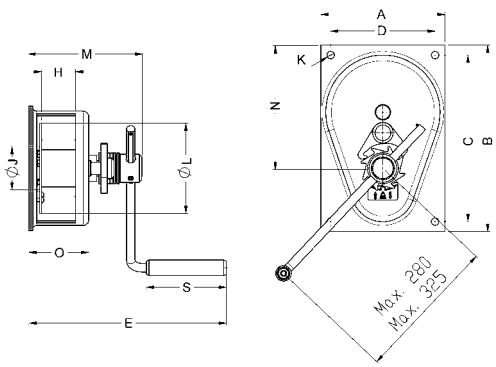

MWS, capacity 300 - 600 kg

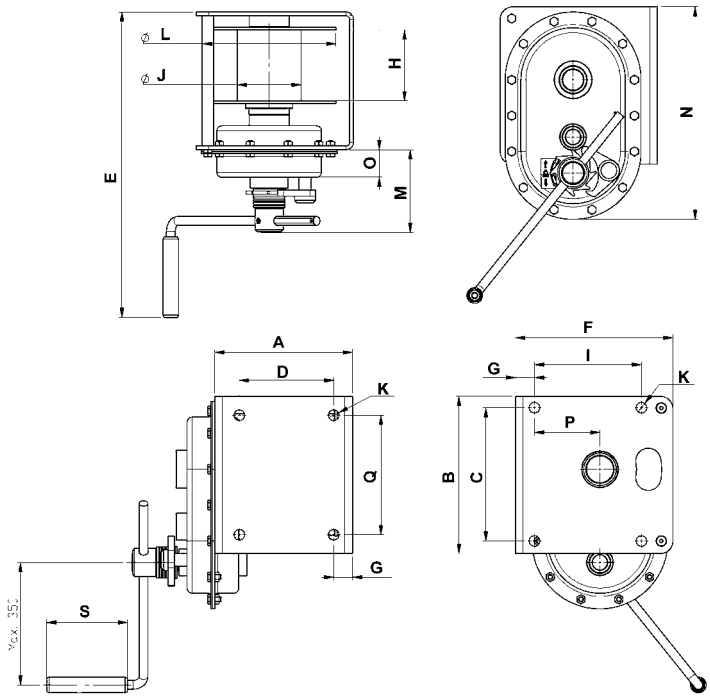

MWS, capacity 1000 - 1500 kg

LB
Console-mounted winch

Capacity 150 - 1200 kg

Originally developed as offroad winch the console-mounted winch model LB is used today for a variety of lifting and pulling applications.

Features

- Light weight robust stamped steel housing.
- Spur gear drive for optimal efficiency and comfortable handling.
- Automatic load pressure brake for save holding of the load in any position. An unintentional brake release is prevented.
- All parts are zinc-plated for increased corrosion protection, drum with additional special coating.
- Easy and quick mounting to consoles, even under lifting conditions.

Optional

- Stainless steel version (mat. 1.4301) for increased corrosion protection.

LB, zinc-plated version, capacity 1200 kg

LB, zinc-plated version, capacity 350 kg

LB-VA, stainless steel version, capacity 900 kg

INFO

For a better guiding of the rope to the suspension point we recommend the use of sheaves or sheave blocks, please see page 105.

Pfaff winches are not designed for passenger elevation applications and must not be used for this purpose.

Technical data LB

Model	Art.-No.	Capacity 1st layer kg	Capacity top layer kg	Rope diameter mm	Useable rope length 1st layer m	Useable rope length top layer m	Lift per crank rotation mm	Required crank effort daN	Weight without rope kg
LB 150 VZ	30239016	150	75	4[1]	0.8	11	125	17	4.2
LB 350 VZ	30239015	350	170	4[1]	1.8	20	125	25	4.8
LB 650 VZ	41239004	650	290	6[1]	1	20	55	22	7.3
LB 900 VZ	41239006	900	400	7[1]	0.8	14	58	24	10
LB 1200 VZ	42239008	1200	430	7[2]	1	26	45	24	12.1
LB 250 VA	32239017	250	125	4[1]	1.8	19.5	125	20	4.8
LB 650 VA	42239012	650	290	6[1]	1	20	55	22	7.6
LB 900 VA	32239013	900	320	7[1]	1	26	45	24	12.1

[1] recommended rope: DIN EN 12385 FE-znk 1770 sZ-spa [2] recommended rope: DIN EN 12385 SE-znk 2160 sZ-spa

Dimensions LB

Model	LB 150 VZ	LB 350 VZ	LB 650 VZ	LB 900 VZ	LB 1200 VZ	LB 250 VA	LB 650 VA	LB 900 VA
A, mm	–	–	232	232	273	–	232	273
B, mm	155	155	192	192	266	155	192	266
C, mm	175	175	210	210	240	175	210	240
Ø D, mm	36	36	63.5	63.5	63.5	36	63.5	63.5
Ø E, mm	100	100	183	183	255	100	183	255
F, mm	–	–	100	100	78	–	100	78
G, mm	75	75	58	58	75	75	58	75
H, mm	–	–	100	100	138	–	100	138
K, mm	159	189	192	192	192	191.5	190	190
L, mm	–	–	25	25	35	–	25	35
M, mm	45	75	38	38	30	75	38	30
N, mm	–	–	–	–	53	–	–	53
O, mm	200	320	250	320	320	320	250	250
P, mm	260	290	293	293	293	292.5	291	291
Q, mm	81	111	95	95	95	111	95	95
R, mm	50	80	50	50	50	80	50	50
S, mm	48	63	55	55	55	65.5	55	55

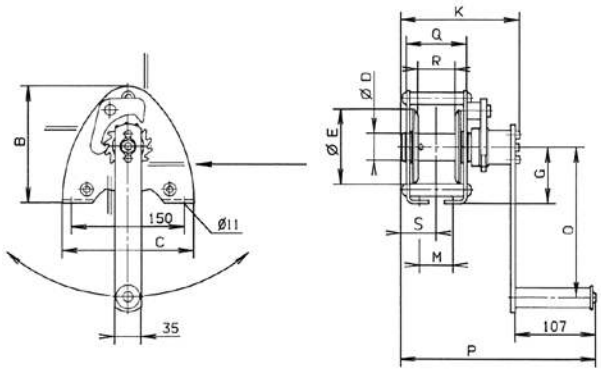

LB 150 - 350 kg

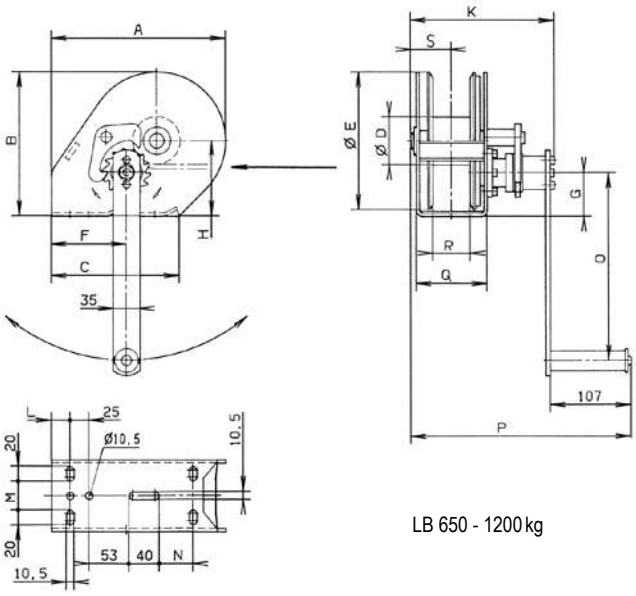

LB 650 - 1200 kg

SW-K GAMMA Console-mounted aluminium rope winch

Capacity 200 - 800 kg

Due to its rugged design, the aluminium rope winch is suitable for operation outdoors.

Features

- Compact aluminium housing and enclosed sprocket wheel drive. From a capacity of 500 kg with speed increasing ratio for small loads and quicker winding and unwinding of the unloaded rope.
- Spur gear drive for optimal efficiency and comfortable handling.
- Enclosed gear for the protection of parts inside, also for arduous applications.
- Low-friction shaft sliding bearings for improved rope lead-off and a longer service life of the winch.
- Wide rope drum for a large rope capacity with two rope attachment points.
- Easy and quick mounting.
- With integrated safety spring brake system and removable crank. The winches can be operated from either side.

SW-K GAMMA
capacity 800 kg

SW-K GAMMA
capacity 500 kg

Technical data SW-K GAMMA

Model	Art.-No.	Capacity 1st layer kg	Capacity top layer kg	Rope diameter[1] mm	Useable rope length 1st layer m	Useable rope length top layer m	Lift per crank rotation mm	Required crank effort daN	Weight without rope kg
GAMMA 200	N040270004	200	110	4[1]	3.6	40	195	19	6
GAMMA 500	N040270001	500	200	6[1]	4.2	50	60/400[2]	12	14
GAMMA 800	N040270006	800	350	7[1]	5.3	78	36/280[2]	18	16

[1]recommended rope: DIN EN 12385 FE-znk 1770 sZ-spa [2]load/speed increasing ratio

Model	Art.-No.	consists of
GAMMA 200	N040270004	30270004 + 39000153
GAMMA 500	N040270001	30270001 + 40033612
GAMMA 800	N040270006	30270006 + 39000153

Dimensions SW-K GAMMA

Model	GAMMA 200	GAMMA 500	GAMMA 800
A, mm	120	120	200
B, mm	160	220	326
C, mm	192	330	336
D, mm	152	100	180
E, mm	165	267	327
F, mm	135	125	250
Ø G, mm	9.5	11	14
Ø H, mm	50	60	70
L, mm	320	250	320
M, mm	207	165	207

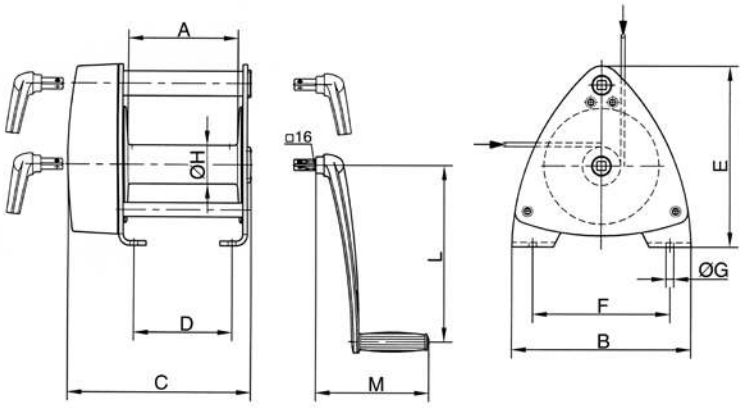

SW-KAL
Compact aluminium rope winch with free-wheeling device

Capacity 750 - 1120 kg

Console-mounted rope winches are used for super-structures on vehicles and trailers and when lifting and lowering loads.

Features

- Self-locking worm gear, free-wheeling device for ease of operation.
- Enclosed gear for the protection of internal parts, also for arduous applications.
- Low-friction shaft bearings for a longer service life of the winch.
- Easy and quick mounting.

INFO

Pfaff winches are not designed for passenger elevation applications and must not be used for this purpose.

Technical data SW-KAL

Model	Art.-No.	Capacity 1st layer kg	Capacity top layer kg	Drum diameter mm	Rope diameter[1] mm	Useable rope length 1st layer m	Useable rope length max. m	Lift per crank rotation mm	Lift per crank rotation top layer mm	Required crank effort daN	Weight without rope kg
KAL 750	30207004	750	600	100	6	1.3	10	15	17	20	7
KAL 1120	30208000	1120	600	63	7	0.5	10	11	16	22	7

[1]recommended rope: DIN EN 12385 FE-znk 1770 sZ-spa

Dimensions SW-KAL

Model	KAL 750	KAL 1120
A, mm	165	165
B, mm	168	168
C, mm	170	170
Ø D, mm	100	63
E, mm	180	180
F, mm	135	135
G, mm	60	60
H, mm	56	50
J, mm	160	160
Ø K, mm	13	13
L, mm	85	85

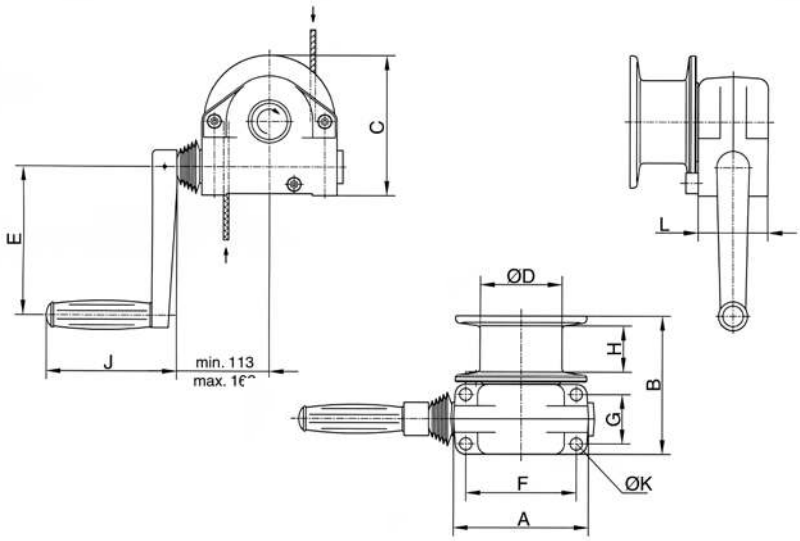

SW-K LAMBDA
Console-mounted rope winch DGUV Vorschrift 17 (BGV C1)

Capacity 300 kg

The compact rope winch for applications on stages, in studios, theatres, etc.

Features

- State-of-the-art design with galvanized side sections for easy handling.
- Grooved drum for single-layer winding of the steel rope. An 18:1 ratio between drum and rope diameter increases the service life of the rope substantially.
- With spring-loaded rope pressure roller to prevent the unloaded rope from jumping off the drum.
- Gear rated for twice the nominal load.
- Spur gear drive for optimal efficiency and comfortable handling.
- The fitted safety crank with two spring brakes acting independently of each other for safe holding of the load in any position.
- In compliance with DGUV Vorschrift 17 (BGV C1) and DIN 56925. Certified by the German committee for lifting equipment (GS-approval-tested safety).

Optional

- Drum extension for a larger rope capacity.
- Special grooves (several layers).

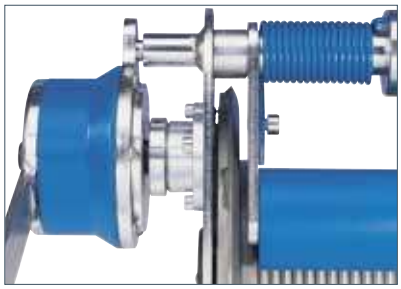

INFO

Pfaff winches are not designed for passenger elevation applications and must not be used for this purpose.

Technical data SW-K LAMBDA

Model	Art.-No.	Capacity kg	Rope diameter[1] mm	Useable rope length 1st layer m	Lift per crank rotation mm	Required crank effort daN	Weight without rope kg
SW-K LAMBDA	30272015	300	6	10	50	18	30
SW-K LAMBDA	30272017	300	6	15	50	18	36

[1]recommended rope: DIN EN 12385 FE-znk 1960 sZ-spa

Dimensions SW-K LAMBDA

Model	SW-K LAMBDA	SW-K LAMBDA
A, mm	379	469
B, mm	310	310
C, mm	340	340
Ø D, mm	139.4	139.4
E, mm	180	270
F, mm	280	280
G, mm	175	265
Ø H, mm	13	13
J, mm	250	250
K, mm	130	130

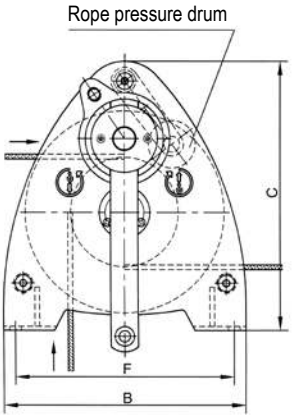

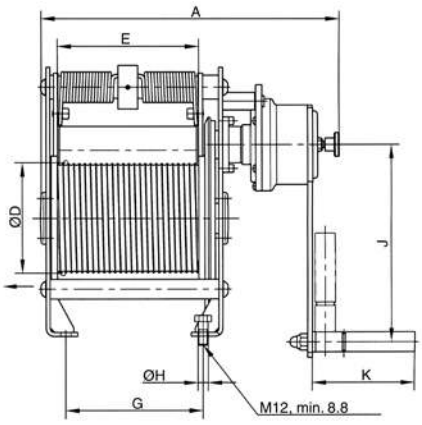

OMEGA
Console-mounted rope winch

Capacity 800 and 1000 kg

Developed for special challenges:
The OMEGA and OMEGA Offshore versions are prepared for manual operation and operation via an external motor-powered drive.

Features

- Removable hand crank.
- Encapsulated gearbox running in oil bath.
- High-quality painting to improve corrosion protection.
- External motorized drive possible (OMEGA Offshore).

Technical data OMEGA

Model	Art.-No.	Capacity 1st layer kg	Capacity top layer kg	Useable rope length 1st layer m	Useable rope length top layer m	Rope diameter mm	Lift per crank rotation mm	Lift per crank rotation top layer mm	Required crank effort daN	Driving torque Mta Nm	Weight without rope kg
OMEGA	192010587	1000	692	1.6	13.1	8[1]	29	42	17	54	approx. 38
OMEGA Offshore	192010589	800	800	1.2	4.3	10[2]	30	35	17	54	approx. 38

[1]recommended rope: DIN EN 12385 SE 1960 N/mm [2]recommended rope: DIN 3069 SE 1770 N/mm²

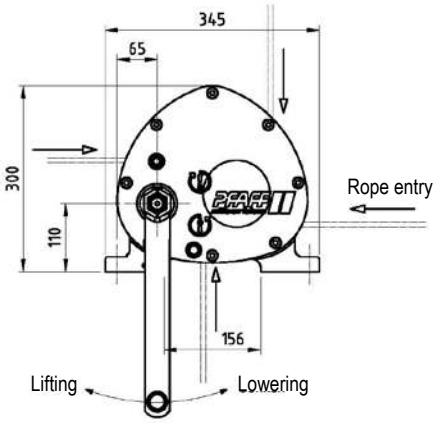

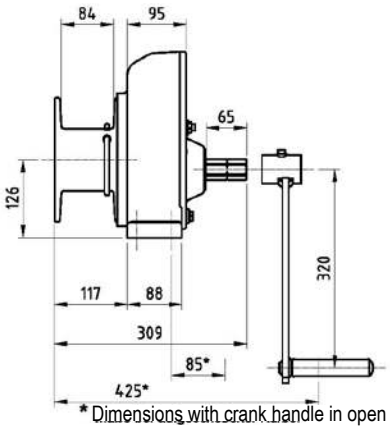

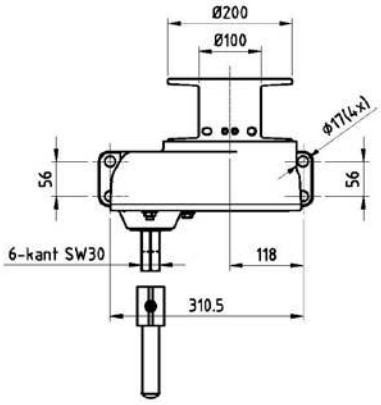

* Dimensions with crank handle in open position

Ex-version available!
We are pleased to send you our new Atex catalogue in PDF format.

DSRB S
Sheave block for rope guidance, equipped with ball bearings

Technical data DSRB

Model	Art.-No.	Classification FEM/ISO	Pulling force in kg at deflection 90°	Pulling force in kg at deflection 180°	Rope diameter mm
DSRB S 90/4	33447103	2m/M5	700	500	3-4
DSRB S 90/6	33447413	1Dm/M1	700	500	5-6
DSRB S 145/7	33447106	1Am/M4	1100	800	7
DSRB S 185/8	33447107	2m/M5	2300	1630	8
DSRB S 270/12	33447111	2m/M5	2500	1800	9-12

All sheaves are available as an individual component on request.

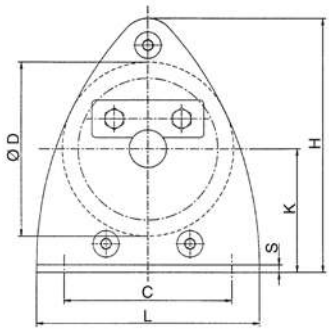

Dimensions DSRB

Model	DSRB S 90/4	DSRB S 90/6	DSRB S 145/7	DSRB S 185/8	DSRB S 270/12
B, mm	85	85	125	138	191
C, mm	90	90	160	195	290
Ø D, mm	90	90	145	185	270
Ø D1, mm	20	25	25	30	40
Ø Dm, mm	80	78	126	160	246
E, mm	62	62	88	106	138
H, mm	134	134	224	273	407
K, mm	65	65	110	135	202
L, mm	120	120	200	245	360
Ø M/M1, mm	9/9	9/9	11.5/13	13.5/15	18/20
S, mm	4	6	6	8	10

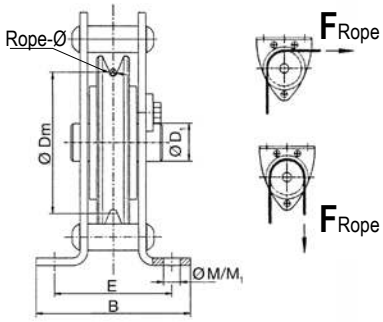

Ex-version on request!

Standard ropes for manual winches

According to DIN EN 12385-4

(formerly DIN 3060 resp. DIN 3069)

Rope diameter	Breaking load of rope min. kN	Art.-No. Rope length 5 m	Art.-No. Rope length 10 m	Art.-No. Rope length 15 m	Art.-No. Rope length 20 m	Capacity clevis end kg
4 mm	10.1	33600405	33600410	33600415	33600420	500
5 mm	15.8	33600505	33600510	33600515	33600520	1000
6 mm	22.8	33600605	33600610	33600615	33600620	1000
7 mm	31.0	33600705	33600710	33600715	33600720	1000

INFO

Additional accessories available on request.

Yale*trac ST*

Cable puller

Pulling force 500 - 3200 daN

The portable Yale*trac ST* cable puller is a versatile tool for pulling, lifting, lowering, tensioning and securing loads over long distances. It has been specially designed for applications in industry, building construction, civil engineering, power line construction, ship building and oil refineries etc. The Yaletrac ST cable puller is almost service free – easy to use and safe.

Cable pullers model Yale*trac ST* feature a housing of dimensionally stable deep-drawn steel plates ensuring a compact and robust design. The hand operating forces have been noticeably optimised for the user by the application of axial ball bearings.

Features

- Stable upright positioning of the unit due to the combination of handle and foot.
- Space-saving telescopic hand lever that can be safely attached to the unit by means of a hook-and-pile fastener. Short handle lever for Y 05 ST not telescopic.
- Overload protection is provided by a shearing pin. Spare shear pins are conveniently located in the carrying handle. A broken pin can be replaced without removing the load.
- Yale*trac ST* uses a special flexible rope. It has six strands with a steel core and is identified by an orange strand. The rope is tapered at one end for easy threading and is fitted with an eye sling hook with safety latch on the other end.
- The parallel arrangement of the clamping system protects the rope by distributing the clamping forces evenly. A long rope advance per each lever stroke increases the working speed.
- Increased service life of the unit due to the use of rubber sleeves which prevent dirt and dust from penetrating into the mechanical equipment of the unit.
- Positioning of the forward and reversing levers in tandem provides a slim design and ensures optimal power transfer.
- A lever disengages the rope clamp system allowing easy and smooth installation of the rope.
- The large opening in the top of the unit allows easy cleaning: simply flush the unit with water and apply motor oil for lubrication and the Yaletrac ST is again ready for use.

Y 10 ST up to Y 32 ST

Optional

- Eye sling hook with safety latch
- Longer ropes
- Drum reel

Technical data Yaletrac ST

Model	Art.-No.	Capacity (WLL) kg	Rope advance per double stroke mm	Lever pull at WLL daN	Lever length mm	Rope diameter mm	Weight without rope kg	Rope weight kg/m
Y 05 ST [1]	192043685	500	20	30	260	6.0	2.8	0.10
Y 10 ST	N02400009	1000	60	23	800	8.4	8.5	0.29
Y 16 ST	N02400010	1600	60	28	790/1190	11.2	15.8	0.53
Y 32 ST	N02400011	3200	40	46	790/1190	16.0	27.2	1.00

[1] see complete scope of delivery

Dimensions Yaletrac ST

Model	Y 05 ST	Y 10 ST	Y 16 ST	Y 32 ST
L, mm	285	435	560	664
H, mm	116	178	205	240
H1, mm	164	235	280	350
B, mm	48	61	86	96
B1, mm	70	94	125	123

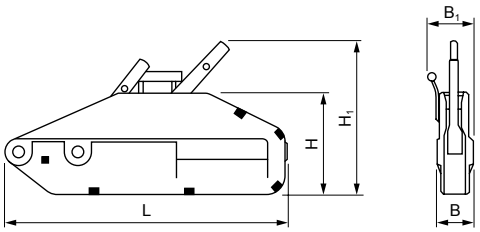

MODEL UPRATING

NOW ALSO AVAILABLE:
500 daN PULLING FORCE!
FOR MOBILE USE

Optional for Yale*trac 05 ST*
Useful shoulder bag

Yale*trac 05 ST*
Assembled and ready for operation (installed)

Y 05 ST

Scope of delivery

- Assembled and ready for operation (installed
- Hand lever
- Wire rope Ø 6 mm, 10 m
- Eye sling hook with safety latch
- Webbing sling HSE 00500

Optional

- Shoulder bag

Yaletrac Cable puller

Pulling force 800 - 3200 daN

It has a light weight, compact, high tensile aluminium alloy housing with a large flat bottom surface for increased stability in horizontal as well as vertical working position.

Features

- Forward and reversing levers in tandem provide slim design and assure power transfer along the centre line.
- Overload protection is by a shearing pin in the forward lever. Spare shear pins are conveniently located in the carrying handle or operating lever. A broken pin can be replaced without removing the load.
- A lever disengages the rope clamp system allowing easy, smooth installation of the rope.
- Yaletrac uses a special flexible rope. It has six strands with a steel core and is identified by an orange strand. The rope is tapered at one end for easy threading and fitted with an eye sling hook with safety latch on the other end.
- The parallel arrangement of the clamping system protects the rope by distributing the clamping forces evenly. A long rope advance per each lever stroke increases the working speed.
- The large opening in the top of the unit allows easy cleaning: simply flush the unit with water, apply motor oil for lubrication and the Yaletrac is again ready for use.

Optional

- Eye sling hook with safety latch
- Longer ropes
- Drum reel

INFO

Yale hoists and trolleys are not designed for passenger elevation applications and must not be used for this purpose.

Complementary products available like cable grips (page 111), pulley blocks (page 110) and textile slings (pages 248 - 253).

Technical data Yaletrac

Model	Art.-No.	Capacity (WLL) kg	Rope advance per double stroke mm	Lever pull at WLL daN	Lever length mm	Rope diameter mm	Weight without rope kg	Rope weight kg/m
Y 08	N02409053	800	60	24	800	8.4	7	0.29
Y 16	N02409054	1600	60	30	790/1190	11.2	14	0.53
Y 32	N02409055	3200	40	50	790/1190	16.0	21	1.00

Dimensions Yaletrac

Model	Y 08	Y 16	Y 32
L, mm	430	545	680
H, mm	168	190	230
H1, mm	240	270	330
B, mm	60	72	91
B1, mm	–	97	110

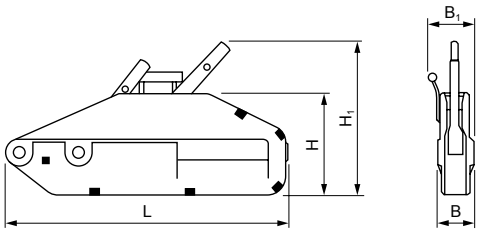

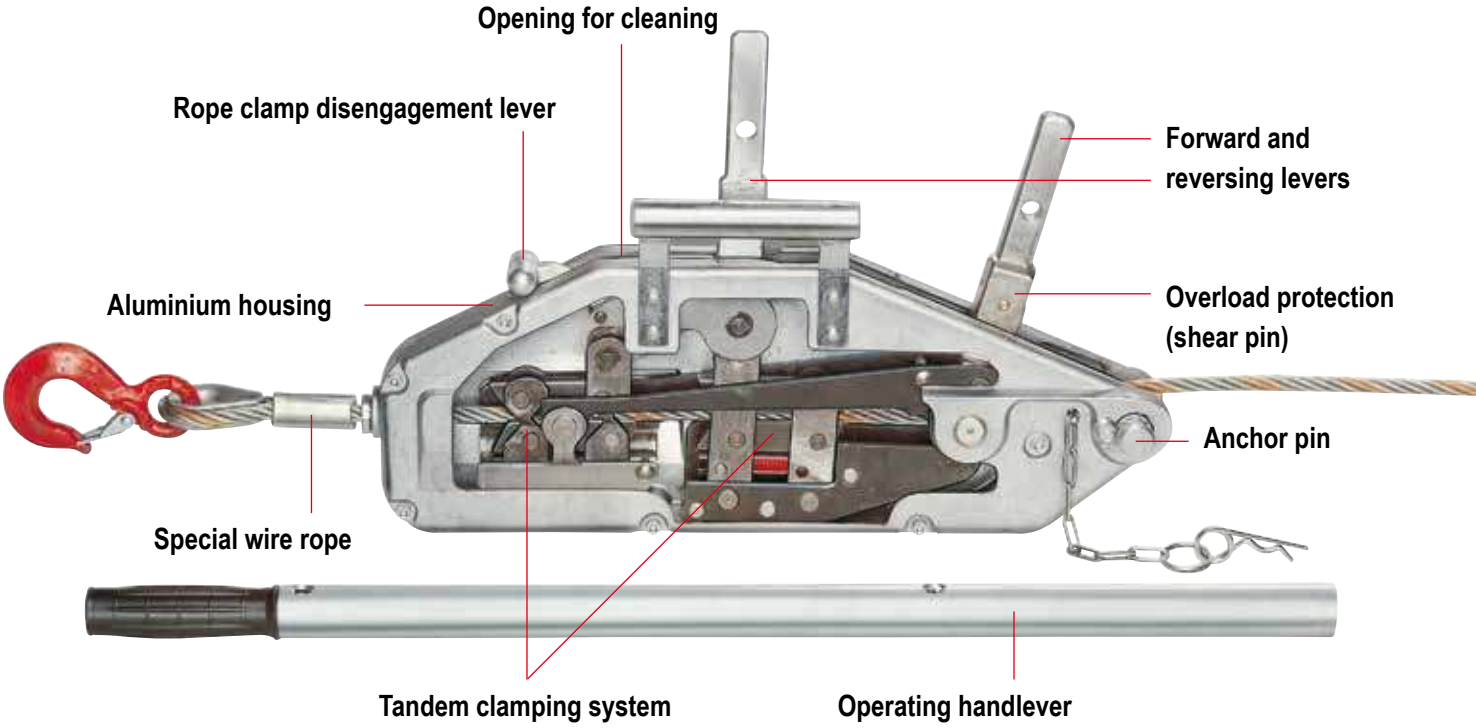

Pulley blocks, hinged, with single steel sheave

Capacity 1000 - 6400 kg

One side of the Yale pulley blocks is hinged and can be opened for easy and quick positioning of the wire rope on the sheave. It can also provide a quick and versatile rigging point or redirect a wire rope.

Features

- Swinging the hook in the direction of pull securely locks the pulley block.
- The high quality cast steel sheaves have machined grooves and are fitted with Permaglide® bushes.

INFO

When choosing and classifying pulley blocks, take the “Grundsätze für Seiltriebe” DIN 15020 into consideration.

Technical data pulley blocks

Model	Art.-No.	Capacity kg	Roller diameter mm	Rope diameter mm	Weight kg
Pulley blocks 1000	N46000005	1000	85	7	3.3
Pulley blocks 2000	N46000003	2000	150	13	8.9
Pulley blocks 3200	N46000004	3200	180	15	15.5
Pulley blocks 6400	N46000006	6400	210	18	26.5

Dimensions pulley blocks

Model	Pulley blocks 1000	Pulley blocks 2000	Pulley blocks 3200	Pulley blocks 6400
B, mm	118	199	230	270
B1, mm	76	92	108	116
B2, mm	17	24	28	35
C, mm	23	27	31	42
Ø D1, mm	85	150	180	210
Ø D2, mm	105	190	220	260
L, mm	305	425	496	655
L1, mm	200	263	295	375
L2, mm	23	30	40	47
R, mm	4	7	9	10

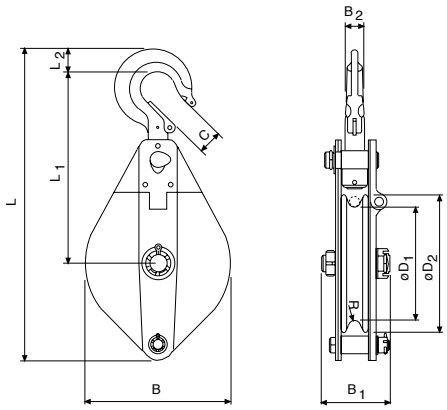

INFO

Yale hoists and trolleys are not designed for passenger elevation applications and must not be used for this purpose.

LMG Cable grip

Pulling force 2000 - 5000 daN

The LITTLE MULE® cable grip is a device for gripping, pulling and tensioning uncoated wire ropes, cables and metal rods in all forms up to a tensile strength of 1770 N/mm² but is dependant on the diameter and surface condition.

The parallel jaws provide a firm, non-slip grip without causing damage to the wire rope. A special spring-loaded guide prevents the grip from dropping off the wire rope and allows instant release without jamming.

LMG I-X und LMG II-X are supplied with grooved jaws and are suitable for wire ropes with a tensile strength of up to 1960 N/mm², but is dependant on the rope diameter and surface condition.

Technical data LMG

Model	Art.-No.	Pulling force daN	For rope diameter Ø mm	Eye opening mm	Weight kg
LMG I	N02606516	2000	4.5 - 15	31 x 44	1.6
LMG I-X	N02608042	2000	5 - 15	31 x 44	1.6
LMG II	N02606517	3000	8 - 20	31 x 44	2.9
LMG II-X	N02608043	3000	8 - 20	31 x 44	2.9
LMG III	N02607609	5000	18 - 32	66 x 93	9.5

INFO

Yale hoists and trolleys are not designed for passenger elevation applications and must not be used for this purpose.

Steel rope for manual and electric winches

All electric winches are supplied without load bearing mechanisms as standard. To ensure safe operation an optimum rope design, optimum length and associated fastening elements (hooks, shackles) are selected.

We recommend to choose wire ropes on the basis of design, type of construction and strength to suit the intended use and frequency of use. The features of the different types of rope design are as follows:

Breaking load
→ Load bearing capacity, strength of the rope

Bending fatigue + flexibility
→ Service life

External wear
→ Stability of the outer strands

Torsion characteristics
→ Lifting of guided or unguided loads

INFO

The use of plastic-coated steel wire ropes with lifting equipment is not permitted.

To meet individual requirements we can provide assistance for the selection of length, diameter and type of the rope, as well as a fastening equipment (thimbles, hooks, rope clips, etc.).

Handling

Our product range includes winches for lifting, pulling and moving of loads. In combination to our winches the following rope types apply:

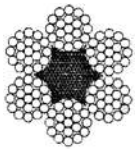

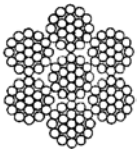

Standard design
6 x 19 + FE 1770 N/mm²

Manual winch rope with fiber inlay 3 - 12 mm Ø

Galvanized or stainless steel in mat. 1.4401
Nominal strength 1570 N/mm² (low breaking load)

- not non-twisting
- crosslay type of construction
- low-tension
- lifting rope for infrequent actuation
- rugged and widely resistant

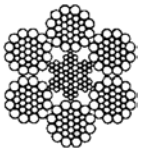

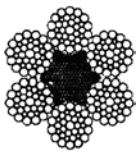

Warrington-Seale
6 x 36 WS + SES (FE) 1770 N/mm²

Manual and electric winch rope in parallel type of construction 10 - 28 mm Ø

Galvanized, with fiber or steel inlays as options

- highly flexible
- high breaking load
- average number of reversed bending stresses

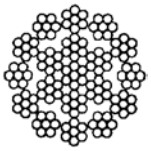

Non-rotating special rope
SE-znk - 1960 N/mm²

Standard rope for electric winches, non-rotating spiral strand rope 3 - 13 mm Ø

Galvanized

- balanced characteristics
- lifting rope for unguided single rope suspension elements
- lifting rope for large lifting heights with multiple rope suspension elements
- not to be used with a swivel
- high strength
- high bending fatigue characteristics

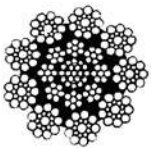

Heavy duty winch rope

Electric winch rope with plastic-coated steel core in double-parallel type of construction 6 - 30 mm Ø

Bright and greased, not non-twisting

- special rope for frequent bending stress reversals and long use
- to be used only with matching rope sheaves and drums
- optimized break loads due to higher fill factor

Rope fasteners/rope connections

The safe functioning of the rope drive depends to a large extent on the rope fastenings on the winch and on the load. Rope connections and ropes themselves have to be checked at regular intervals by competent persons.
The following rope connections are permissible for use with lifting equipment:

Non-releasable rope connections

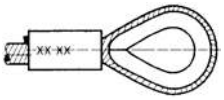

Aluminium press-on connection with thimbles

in combination with safety eye hooks or screw shackles provide a simple and safe means of suspending loads.

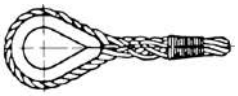

Splice connections (uncoated)
in combination with thimbles, hooks, etc.

In the most unfavourable situation, splice connections can lead to a reduction in the breaking load of the rope line of up to 40 %.

Releasable rope connections

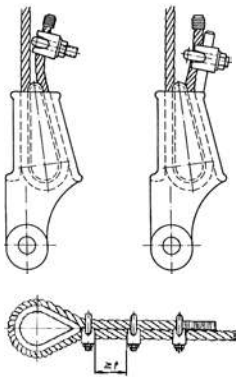

Rope clips

- The end which is not under load must never be fastened to the load-bearing line.
- The length of the unloaded rope end should be at least 20 times the diameter of the rope and not less than 150 mm.
- Clips may no longer be used once the rope has worn by more than 10 %.
- **Wire rope clamps may not be used for rope connections for lifting equipment, with the exception of fastening equipment which is manufactured for none-recuring, special purposes**!

Handling of ropes – Unwinding

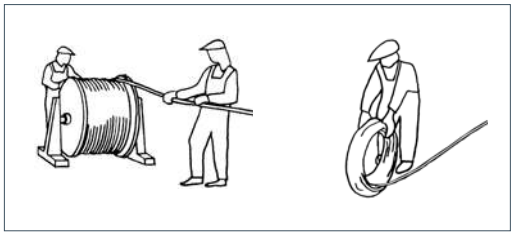

RIGHT

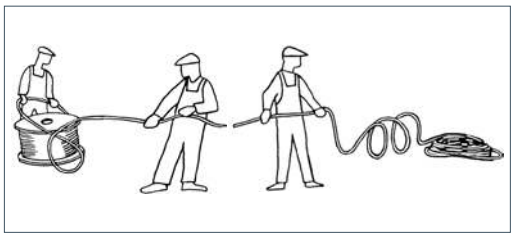

WRONG

Care of ropes

”Running ropes” in particular will only offer optimum service lives if they are well lubricated. The use of steel ropes without grease will cause them to wear quickly and the load bearing mechanism will have to be replaced early.

INFO

Pressed and splice connections may only be produced by specialist firms or rope manufacturers.

Notes on the installation of winches

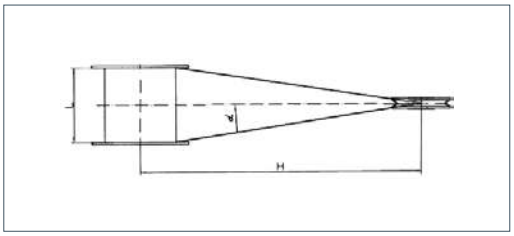

The distance between rope drum and sheave must be selected in a way that the maximum deflection angle for the type of rope used is not exceeded:

Standard rope - Deflection angle < 3°
(Minimum distance = Drum width x 10)

Special rope - Deflection angle < 1,5°
(Minimum distance = Drum width x 20)

- To prevent the wire rope from becoming slack when unloaded it should always have an additional rope weight when used with lifting equipment
- Guided loads must be monitored with a slack rope cut-out.
- To prevent the rope from becoming damaged, steel wire ropes must never be guided
  - over edges
  - over deflection radii which are too small or
  - over rope sheaves with grooves which are too small.
- High dynamic forces can lead to sudden breaks or crashes of the load. It is therefore imperative that loads are never brought to a dead stop (“on block”) and that loads are never allowed to drop into the rope.

The image shows the winch RPE
up to 1.0 t

Yale *RPE*

Electric winch

Capacity 250 - 2000 kg

Winches series RPE are designed for performance, efficiency and safety and offer many advantages and options. RPE's compact, practical cube design and universal rope lead-offs allow individual applications in almost any position for lifting and pulling loads.
The winches are designed to DIN 15020, classification 1 Bm/M3 and the EC machinery directives.

Every winch is factory tested with overload. The units are supplied with a test certificate showing the unit's serial-no. and an operating instructions manual which contains a manufacturer's declaration.

Features

- Compact dimensions due to internal brake motor.
- Standard: 400 V/230 V, 3 Ph, 50 Hz
  or 230 V, 1 Ph, 50 Hz
- Protected to IP 55
- Insulation class F
- Adjustable slip clutch to protect the winch from overloading standard for RPE 10-6 and RPE 20-6.
- Spur gear transmission with helical first gear ensures smooth motion. Lubricated by grease and can, therefore, be used in any position.
- Spring pressure disc brake incorporated in the motor holds the load secure even in the event of a power failure.
- Plain rope drum standard.The rope is secured to the drum in a recess so that the rope can be wound onto the drum in several layers without damage.
- 42 V low voltage control (incl. push-button with emergency-stop and 2 m control cable) or without controls.

Rope attachment

Spring pressure disc brake

Brake motor

INFO

When selecting the length of the rope please bear in mind that a minimum of 2 - 3 windings have to remain on the drum!

The wire rope, if ordered, comes dismounted, and is to be mounted onto the drum by the user.

Please note, the single-phase winches generate a higher noise level than those with three-phase motors!

Optional

- Different drum designs (XL) extended to accommodate longer rope.
- Machined grooved drums for better rope reeling.
- Drums with separation web and extra rope outlets for working with two or more ropes.
- Geared limit switches to limit rope motion in both directions (in combination with 42 V low voltage control).
- Slack rope switch to automatically stop the winch when rope tension eases e.g. when the load touches down (in combination with 42 V low voltage control).
- Frequency converter for stepless speed control.
- Radio remote control (in combination with 42 V low voltage control).
- Other operating voltages on request.
- Motor brakes with manual release.
- Special coatings or zinc plated finish.

The image shows the winch RPE 20-6 with the grooved drum (optional).

Single-phase A.C. motor

Geared limit switches

Gearbox with slip clutch

Different drum designs

INFO

Also available as zinc-plated version on request!

Technical data RPE

Model	Capacity kg	Lifting speed m/min 1st layer	Lifting speed m/min top layer	Rope layers max.	Rope diameter mm	Motor kW	Motor rating ED	Weight without rope kg L	Weight without rope kg XL
RPE 2-13 L	250	10.2	13.2	4	4	0.55	40 %	40	48
RPE 5-6 L	500	4.6	6.6	4	6	0.55	40 %	41	49
RPE 5-12 L	500	8.7	12.6	4	6	1.1	40 %	47	54
RPE 10-6 L[1]	1000	5.1	6.5	3	8	1.1	40 %	89	105
RPE 20-6[1]	2000	5.2	7.6	3	12	2.2	40 %	213	235

[1]Adjustable slip clutch as standard

Plain drum rope capacity

Model	Capacity top layer kg	Drum size	Useable rope length max. m 1st layer	2nd layer	3rd layer	4th layer
RPE 2-13[1]	250	1[1]	11.1	24.5	39	54
RPE 5-6[1]	500	1[1]	7.4	16.9	27	38
RPE 10-6[1]	1000	1[1]	10.1	23.0	37	–
RPE 20-6	2000	1	13.2	30.3	49	–
RPE 2-13 L	250	2	16.8	36.4	57	80
RPE 5-6 L	500	2	11.3	25.2	40	57
RPE 5-12 L	500	2	11.3	25.2	40	57
RPE 10-6 L	1000	2	15.8	35.2	56	–
RPE 20-6 L	2000	2	20.6	46.1	74	–
RPE 2-13 XL	250	3	44.3	94.1	148	200
RPE 5-6 XL	500	3	30.0	65.5	105	149
RPE 5-12 XL	500	3	65.0	65.5	105	149
RPE 10-6 XL	1000	3	30.7	67.0	107	–
RPE 20-6 XL	2000	3	34.1	74.9	120	–

[1]available on request only!

Grooved drum rope capacity (recommended for single layer operation)

Model	Capacity top layer kg	Drum size	Useable rope length m 1st layer	Useable rope length m max.
RPE 2-13 R[1]	250	1[1]	8.8	43
RPE 5-6 R[1]	500	1[1]	6.2	33
RPE 10-6 R[1]	1000	1[1]	8.2	30
RPE 20-6 R	2000	1	12.0	44
RPE 2-13 LR	250	2	13.3	64
RPE 5-6 LR	500	2	9.5	49
RPE 5-12 LR	500	2	9.5	49
RPE 10-6 LR	1000	2	12.9	47
RPE 20-6 LR	2000	2	16.8	61
RPE 2-13 XLR	250	3	35.3	165
RPE 5-6 XLR	500	3	25.7	128
RPE 5-12 XLR	500	3	25.7	128
RPE 10-6 XLR	1000	3	25.2	89
RPE 20-6 XLR	2000	3	27.9	99

[1]available on request only!

INFO

When selecting the length of the rope please bear in mind that a minimum of 2 - 3 windings have to remain on the drum!

Yale hoists and trolleys are not designed for passenger elevation applications and must not be used for this purpose.

Dimensions RPE

Model	RPE 2-13 [1] RPE 5-6 [1]	RPE 2-13 L RPE 5-6 L RPE 5-12 L	RPE 2-13 XL RPE 5-6 XL RPE 5-12 XL	RPE 10-6 [1]	RPE 10-6 L	RPE 10-6 XL	RPE 20-6	RPE 20-6 L	RPE 20-6 XL
A, mm	405	405	405	525	525	525	670	670	670
B, mm	375	375	375	485	485	485	550	550	550
C, mm	18	18	18	25	25	25	36	36	36
D_{TR}, mm	76	76	76	108	108	108	146	146	146
D max, mm	104	118	118	148	148	148	224.4	224.4	224.4
DA, mm	150	150	150	180	180	180	245	245	245
E, mm	338	428	865	450	575	902	619	784	1.084
F, mm	210	300	737	270	395	722	360	525	825
G, mm	260	350	787	345	470	797	480	645	945
H, mm	290	380	817	380	505	832	540	705	1.005
I, mm	11	11	11	13	13	13	23	23	23
K, mm	250	250	250	340	340	340	401	401	401
L, mm	125	125	125	170	170	170	215	215	215
M, mm	6	6	6	10	10	10	15	15	15
N, mm	33	33	33	47.5	47.5	47.5	72.5	72.5	72.5
O, mm	194	284	721	250	375	702	335	500	800
P, mm	19	19	19	24	24	24	34	34	34
Q, mm	13	13	13	19	19	19	26	26	26
R, mm	125	125	125	170	170	170	135	135	135
S, mm	4	6	6	8	8	8	12	12	12
α 1, °	130	130	130	145	145	145	153	153	153
α 2, °	110	110	110	125	125	125	136	136	136
α 3, °	40	40	40	50	50	50	64	64	64
β 1, °	150	150	150	155	155	155	147	147	147
β 2, °	90	90	90	100	100	100	107	107	107
β 3, °	80	80	80	83	83	83	83	83	83

[1] available on request only! Dimensions for models with optional features are available on request!

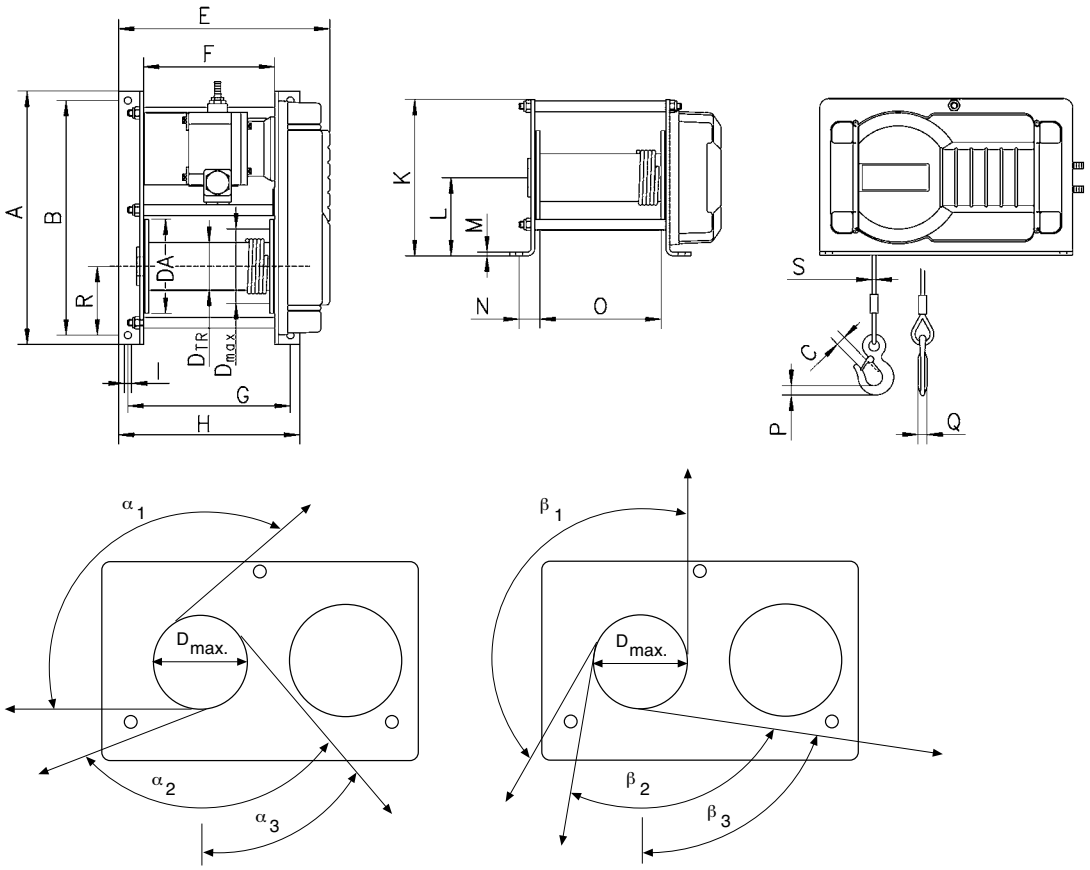

Rope lead-offs for electric winch RPE

DSRB S
Sheave block for rope guidance, equipped with ball bearings

Technical data DSRB S

Model	Art.-No.	Classification FEM/ISO	Pulling force in kg at deflection 90°	Pulling force in kg at deflection 180°	Rope diameter mm
DSRB S 90/4	33447103	2m/M5	700	500	4
DSRB S 90/6	33447413	1Dm/M1	700	500	4
DSRB S 145/5	33447104	4m/M6	1100	800	5
DSRB S 145/6	33447105	2m/M5	1100	800	6
DSRB S 145/7	33447106	1 Am/M4	1100	800	6
DSRB S 185/8	33447107	2m/M5	2300	1630	8
DSRB S 185/9	33447108	1Am/M4	2300	1630	9
DSRB S 270/12	33447111	2m/M5	2500	1800	12

All sheaves are available as an individual component on request.

Dimensions DSRB S

Model	DSRB S 90/4	DSRB S 90/6	DSRB S 145/5	DSRB S 145/6	DSRB S 145/7	DSRB S 185/8	DSRB S 185/9	DSRB S 270/12
Art.-No.	33447103	33447413	33447104	33447105	33447106	33447107	33447108	33447111
B, mm	85	85	125	125	125	138	138	191
C, mm	90	90	160	160	160	195	195	290
Ø D, mm	90	90	145	145	145	185	185	270
Ø D1, mm	20	20	25	25	25	30	30	40
Ø Dm, mm	80	78	125	125	126	160	162	246
E, mm	62	62	88	88	88	106	106	138
H, mm	134	134	224	224	224	273	273	407
K, mm	65	65	110	110	110	135	135	202
L, mm	120	120	200	200	200	245	245	360
Ø M/M1, mm	9/9	9/9	11.5/13	11.5/13	11.5/13	13.5/15	13.5/15	18/20
S, mm	4	4	6	6	6	8	8	10

Ex-version on request!

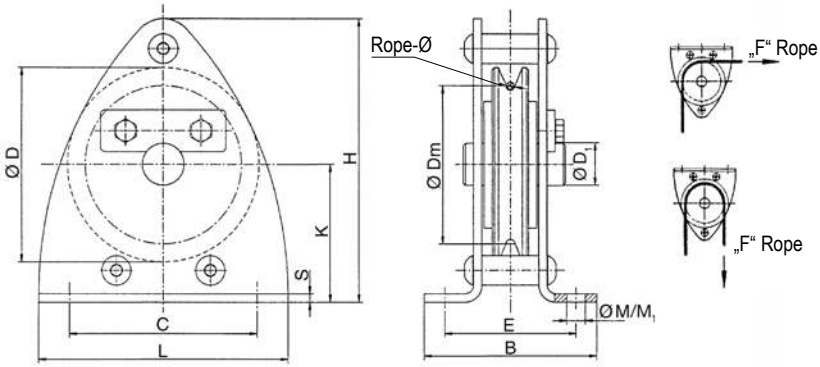

BETA SL
Electric winch

Capacity 250 - 2000 kg

Electric winches of the BETA SL range are used for lifting, towing and positioning of loads. The proven technology and specified equipment features make the winch the ideal product for standard applications.

Features

- The electrically released spring pressure disc brake safely holds the load also in the event of a power failure.
- Powerful three-phase AC drives for multi-range voltage 400V – 50Hz. Motor type of enclosure IP 55, duty factor 40 % ED.
- Electronic overload protection from 1000 kg lifting load as standard.
- The maintenance-free, oil lubricated gearbox has quiet running characteristics due to milled and ground gears with helical teeth.
- Standard rope drum of grooved design, with large rope capacity.
- Variable rope lead-in.
- Contactor control (incl. gear limit switch).
- In accordance with DGUV regulation 55 (winches, lifting and pulling equipment).

Also available at short notice with the following options:

- **Rope pressure roll**
  Supports the tidy coiling of the rope, especially with high lifting heights.
- **Slack rope switch**
  Prevents unwanted uncoiling if the wire rope is not under load.
- **Control switch with 3 m control cable**
  Greater freedom of movement for the user, better view of the working area of the wire rope winch.
- **Frequency converter (SL 1 - SL 3)**
  Infinitely variable rope speed controlled via potentiometer, control range 20-87 Hz (SL 3 = 10-50 Hz). The frequency converter allows loads to be moved gently and sensitively..

Optional: Frequency converter
(For infinitely variable speed regulation)

Technical data BETA SL

Model	Art.-No.	Size	Capacity 1st layer	Lifting speed 1st layer	Rope diameter [3]	Motor	Classification	Useable rope length 1st layer	Useable rope length top layer
			kg	m/min	mm	kW	FEM/ISO	m/min	m/min
BETA-SL0-250-2,5-4-46,7-1-GE-St	40063758	SL 0	250	2.5	4	0.25	1Bm/M3	7	46.7
BETA-SL0-250-5,0-4-46,7-1-GE-St	31140006	SL 0	250	4.7	4	0.37	1Bm/M3	7	46.7
BETA-SL1-500-7,1-6-48,9-1-GE-St	40062946	SL 1	500	6.8	6	0.75	1Am/M4	6.7	48.9
BETA-SL1-630-7,1-6-48,9-1-GE-St	40062989	SL 1	630	6.8	6	0.75	1Bm/M3	6.7	48.9
BETA-SL2-980-6,3-9-77,5-1-GE-St	40062990	SL 2	980	6.0	9	1.1	1Am/M4	11	77.5
BETA-SL2-1250-6,3-9-64,0-1-GE-St	40062993	SL 2	1250	6.0	9	1.1	1Am/M4	11	77.5
BETA-SL3-2000-6,8-12-73,8-1-GE-St	40062996	SL 3	2000	6.8	12	2.2	1Bm/M3	10	74.5

[3] recommended rope: DIN 3069 FE-znk 1960 sZ-spa

Dimensions BETA SL

Model	BETA-SL0-250 2,5-4-46,7-1-GE-St	BETA-SL0-250 5,0-4-46,7-1-GE-St	BETA-SL1-500 7,1-6-48,9-1-GE-St	BETA-SL1-630 7,1-6-48,9-1-GE-St	BETA-SL2-980 6,3-9-77,5-1-GE-St	BETA-SL2-1250 6,3-9-64,0-1-GE-St	BETA-SL3-2000 6,8-12-73,8-1-GE-St
A, mm	185	185	215	215	270	270	320
B, mm	170	170	300	300	400	400	510
Ø C, mm	12	12	13.5	13.5	18	18	22
F, mm	389	389	740	750	920	930	1070
G, mm	200	200	340	340	465	465	570
H, mm	241	241	340	345	475	480	614
K, mm	432	–	–	–	–	–	–
L, mm	180	180	200	200	250	250	300
Ø M, mm	64	64	86	86	175	175	175

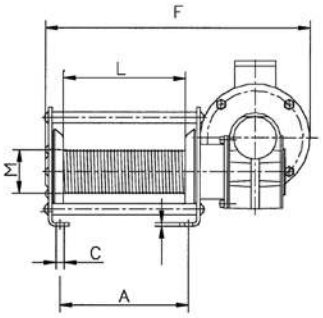

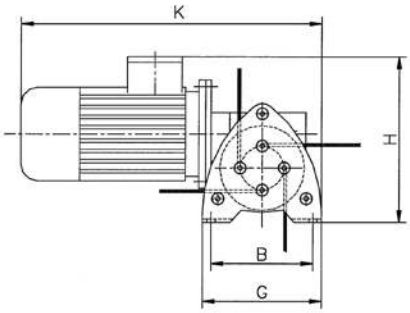

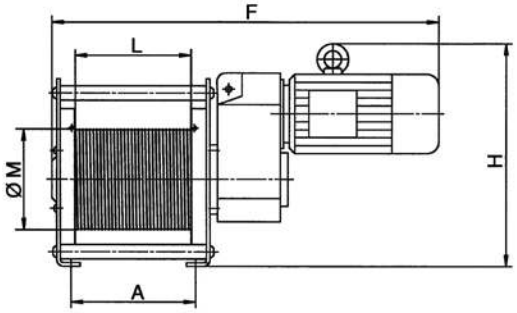

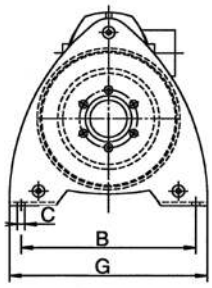

INFO

Pfaff winches are not designed for passenger elevation applications and must not be used for this purpose.

THETA
Electric winch

Capacity 100 kg

The compact Pfaff-silberblau THETA series offers reliable safety, besides being suitable for a wide range of applications and very easy to use. Its high safety standard is achieved, amongst other things, by a mechanical double safety drum brake, separate from the drive, for safe and firm holding of the load.
Factory-specified features make this safety electric wire rope winch interesting for many applications, such as construction sites, in building technology or sports facilities – and thus also for individuals, craftsmen, local councils and construction yards. The Pfaff-silberblau THETA wire rope winch is operated with a supply voltage of 230 V (50 Hz).

Features

- Compact design.
- Two independently acting brakes.
- Ready for use with control/limit switch.
- Connection cable with plug.
- Test and maintenance friendly.
- Made in Germany.
- Available from stock and ready for immediate use after delivery.
- In accordance with the accident prevention regulations DGUV V54 (BGV D8) with special release for static suspension of loads above persons incl. expert.

Technical data THETA

Model	Art.-No.	Capacity kg	Rope speed m/min	Motor kW	Rope diameter mm	Rope capacity m
THETA	192054528	100	3	0.12	4	10

Dimensions THETA

Model	THETA
Art.-No.	192054528
A, mm	277
B, mm	150
Ø C, mm	12
D, mm	217
E, mm	50
F, mm	476
G, mm	190
H, mm	348
I, mm	86
Ø M, mm	72

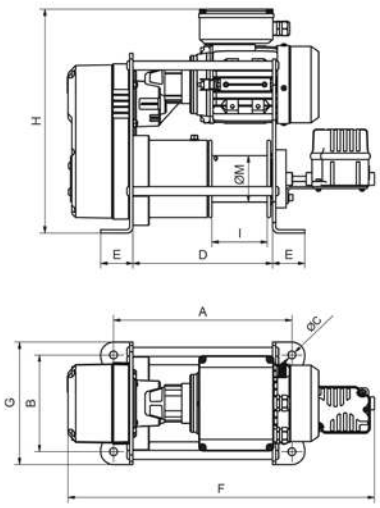

Endless winch up to 500 kg!

STANDARD
This image shows the Yale Mtrac winch with standard equipment

PATENTED*

BI-DIRECTIONAL ACTUATOR

FOR BI-DIRECTIONAL LIFTING

*German Patent DE 10 2012 100 099

Yale *Mtrac*®

Endless winch

Capacity 66 - 500 kg

(two-fall design up to 1000 kg, optional)

The Yale *Mtrac*® endless winch combines state-of-the-art industrial design with technical innovation to solve a specific customer need – the need for a safe and simple handling solution for mobile applications.
We did just that. Because the rope of the endless winch is not collected during operation, there is no limit to the lifting height and traction length when using this product. And, with a full offering of wire ropes and accessories, this winch can be used in virtually any application requiring a hoist., e.g. on construction sites, in maintenance and assembly, in wind mills and power supply, water and utility sector, overhead line maintenance, etc.

Features

- Control pendant (IP 65-type of enclosure) is connected via a control cable.
- Standard power cable has a length of 1.0 m and is fitted with a CE connector plug (or a Schuko-plug.
- 42 V low-voltage control.
- Ergonomic, fitted carrying handle features a comfortable plastic grip.
- Mounting feet fixed on the housing for easy set up.
- Standard operating voltagesof 400 V, 3 Ph, 50 Hz or 230 V, 1 Ph, 50 Hz.
- Galvanized, high-density steel rope is 10 m long (dia. 6.5 mm) and features a safety hook on one end as well as a rounded, plastic-coated tip at the loose end.
- Two spring buffers with adjusting rings can be attached to the wire rope to set the limit switches for both upward and downward movement.
- Drive sheave is made of especially hardened steel designed to ensure long service life.
- The patented (German Patent DE 10 2012 100 099) bi-directional actuator ensures the rope is safely guided and securely held in place.
- Slip clutch is located outside of the load path for added safety.
- Limit switches ensure safe cut-out for the upper and lower hook positions.
- Electromagnetic brake holds the load safely, even in the event of a power failure.
- Winch is classified up to 1 Bm/M3 acc. to FEM/ISO.
- Winch is protected up to IP 55.

FEATURES

PATENTED* BI-DIRECTIONAL ACTUATOR

The Yale *Mtrac* endless winch features a unique bi-directional actuator that allows the winch to move the rated load on both ends of the rope. A hook can be fitted on the unloaded rope end (as an option) thus eliminating no-load motions. How does it work? Once the load has reached the top position, the unloaded rope end with the other hook is automatically in the bottom position and a new load can be picked up immediately. The lifting frequency is doubled as the two falls can be evenly loaded alternately with the rated load.

*German Patent DE 10 2012 100 099

READY TO USE

Each winch leaves our factory as a complete plug and play unit.
The control cable with control pendant is connected, as is the power supply cable with the plug. The standard design also features a wire rope complete with fitted safety hook. The carrying handle is included as standard and load-bearing feet are provided on the lower part of the housing.

STATE-OF-THE-ART INDUSTRIAL DESIGN

A compact and state-of-the-art design was at the focus of the Yale *Mtrac*. The housing is made of low-pressure, die-cast aluminum and the high-strength, glass-fiber reinforced plastic covers ensure low weight and outstanding rigidity. A carrying frame, available as an option, allows for easy, two-person transport and provides additional protection against damage when moving the unit or operating it in rough conditions.

VERSATILE APPLICATION

Mtrac winches can be used vertically, at an angle or horizontally for versatility depending on your application. Optionally, the load capacity can be doubled with two-fall reeving. Bolting points on the housing allow the customer to attach the winch in a way that best suits their application.

PROVEN TECHNOLOGY

Mtrac winches include reliable and proven Yale technology. The oil-bath lubricated and case-hardened gearbox has a helical gearing for smooth operation and a long service life. IP 55-rated motor enclosure ensures reliable operation of the winch for both indoor and outdoor applications.

BEST-IN-CLASS SAFETY

Standard winch models feature 42 V low-voltage control with built-in limit switches designed to stop the hoist when the hook has reached the upper or lower position. The operator can define the limit switch positions by simply relocating the spring buffers on the rope. The winch is also protected against overload by means of a slip clutch that is designed to guarantee a permanent connection between the load and the brake.

SIMPLE MAINTENANCE

Yale *Mtrac* winches are easy to service. Units are designed with a modular structure with all critical parts easily accessible. Re-adjusting the slip clutch and inspecting the brake is quick and easy as well. In addition, the handle, or carrying frame, can be quickly and easily assembled and removed.

ERGONOMIC DESIGN

Standard units have a comfortable plastic grip that allows for convenient one-person transport. The optional carrying frame features a grip on each handle, making two-person transport easy. And, because of the rounded housing, operator injury is minimized.

STANDARD
This image shows the Yale Mtrac winch with standard equipment.

Capacity up to 1000 kg

TWO-FALL DESIGN

with optional components such as suspension hook and bottom block.

Optional

BI-DIRECTIONAL LIFTING

To realize the full potential of this winch, operators can utilize the bi-directional actuator. Simply fit an additional hook at the loose rope end to take advantage of this unique feature. Once the hook is in place, the unit can be used in bi-directional lifting mode (two-hook mode). The actuator is mounted in the interior of the winch and ensures the rope smoothly runs in the drive sheave. It also extends the pressure surface of the rope on the drive sheave for safe friction contact. The two load falls are designed to alternately carry the rated load.

CARRYING FRAME

The carrying frame on the Yale Mtrac can be installed either at the top or at the bottom on the unit. It is ergonomically designed with plastic grips that ensure hand-friendly handling and carrying of the winch by two people. The carrying frame cannot be used as a load-bearing component; it is exclusively intended to protect the housing, e.g. while working, during storage or while transporting or carrying the winch. Two carrying frames can also be used (one at the top and one at the bottom).

CONNECTION TO TROLLEYS

If low headroom is required, the Yale Mtrac winch can be easily converted from the standard hook connection to a trolley mount using a Yale trolley. Manual and power-driven trolleys available on request.

Yale *Mtrac* winches with two carrying frames (optional) are extremely well protected and can be safely operated in any position.

The accessories for the two-part reeved option double the load capacity.

Optional

- The transport and carrying frames are designed to protect the housing.
  They must not be used as load-bearing components!
- Two-part reeving configuration doubles the load capacity.
- Additional hook kit for bi-directional lifting.
- Special voltages on request.
- Steel wire ropes of various lengths.
- Manual and electric trolleys.
- Frequency converter for variable speed control or smooth starting.
- Operating hours counter to determine the remaining service life and number of switching operations.
- Radio remote control with extended operation range.
- Varying lengths for power and control cables.
- Stainless steel wire ropes (with shorter service life than standard).

PATENTED*

BI-DIRECTIONAL ACTUATOR

FOR BI-DIRECTIONAL LIFTING

*German Patent DE 10 2012 100 099

Optional
Radio remote control

BI-DIRECTIONAL LIFTING

This image shows the Yale Mtrac's optional second hook that allows for bi-directional lifting operation.

The hooks of the two rope falls can be alternately loaded with 100 % rated load.

BI-DIRECTIONAL LIFTING

LIMIT SWITCHES AND LIMIT SWITCH ACTUATOR

The spring buffers attached to the rope trip the limit switch actuator when they contact the paddle, which in turn actuates the micro-switches that stop the hoisting motion (via the low voltage control).

Technical data YaleMtrac

Model	Art.-No.	Single fall version Standard		Double fall version Optional		Motor	Operating voltage
		Capacity kg	Lifting speed m/min	Capacity kg	Lifting speed m/min	kW	
YMT 1-15	192025166	100	15	200	7.5	0.37	230 V/1 Ph/50 Hz
YMT 3-5	192025170	300	5	600	2.5	0.37	230 V/1 Ph/50 Hz
YMTF 0,6-30	192025175	66	30/7.5	130	15/3.7	0.37/0.09	400 V/3 Ph/50 Hz
YMT 1-30	192025171	100	30	200	15	0.55	400 V/3 Ph/50 Hz
YMTF 2-10	192025176	200	10/2.5	400	5/1.3	0.37/0.09	400 V/3 Ph/50 Hz
YMT 3-10	192025174	300	10	600	5	0.55	400 V/3 Ph/50 Hz
YMT 5-5	192053140	500	5	1.000	2.5	0.55	400 V/3 Ph/50 Hz

Weight from 24 to 26 kg (without rope) depending on options. Rope Ø 6.5 mm

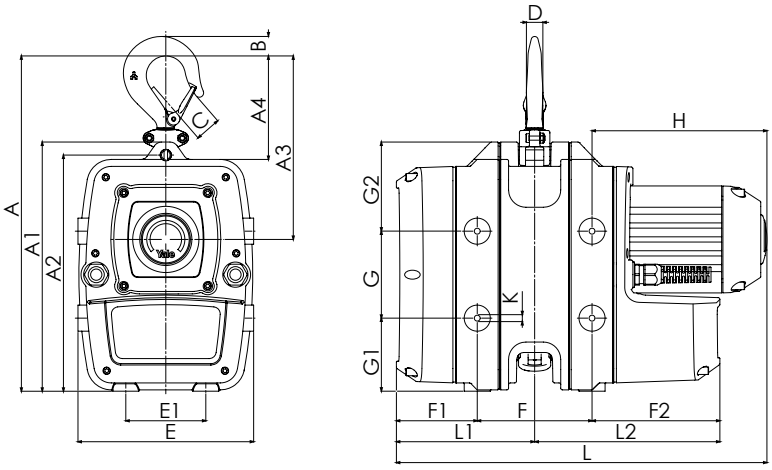

Dimensions	
A, mm	385
A1, mm	287
A2, mm	272
A3, mm	221
A4, mm	119
B, mm	22
C, mm	29
D, mm	19
E, mm	202
E1, mm	92
F, mm	132
F1, mm	93
F2, mm	147
G, mm	100
G1, mm	84
G2, mm	103
H, mm	201
K, mm	M8
L, mm	426
L1, mm	159
L2, mm	213

INFO

Yale hoists and trolleys are not designed for passenger elevation applications and must not be used for this purpose.

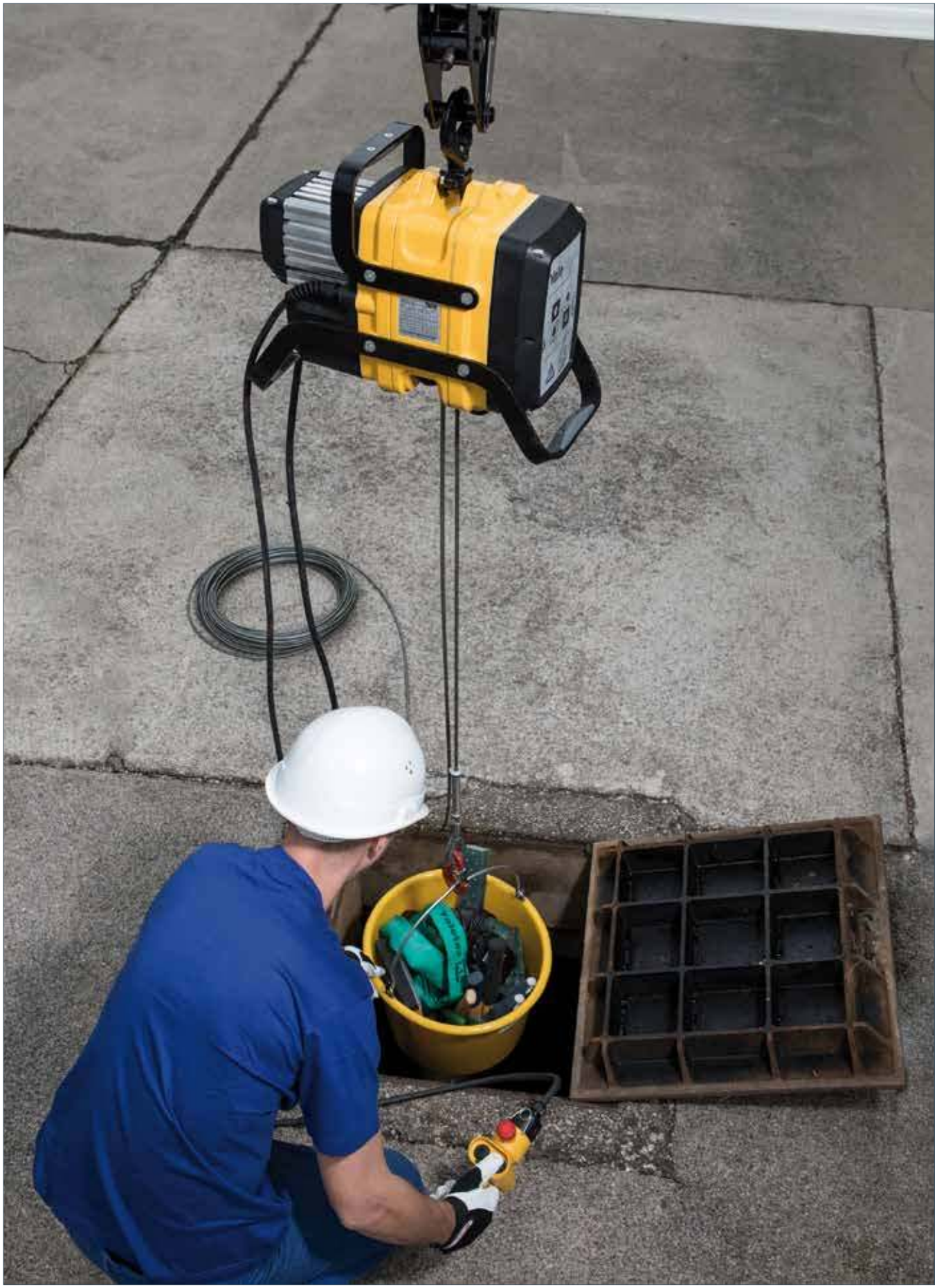

Functional principle of cranks

Safety crank (Siku) and ratchet crank (Raku)

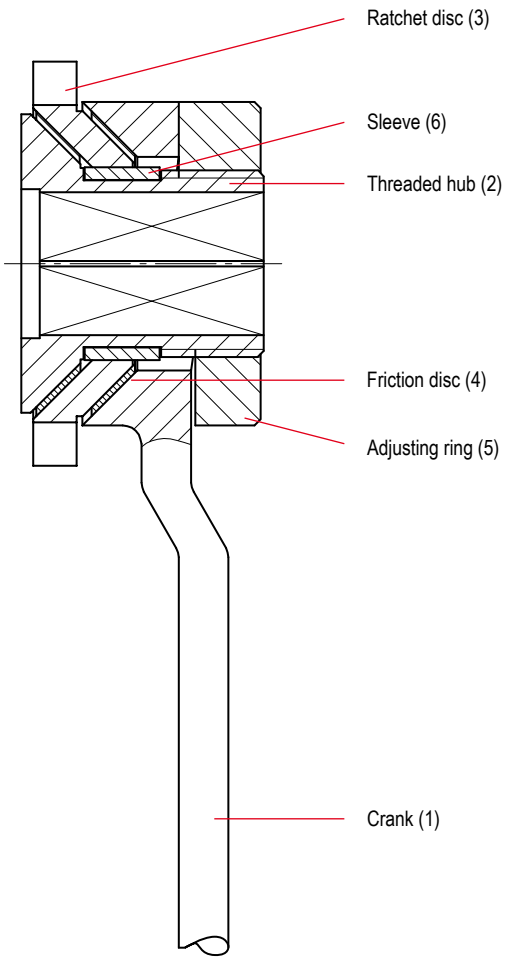

Lifting

By turning the crank (1) clockwise, all brake parts like friction discs (4), ratchet disc (3) and threaded hub (2) locked to a complete system. All components rotate in the same direction and the ratchet pawls (not shown here) engage alternately in the teeth on the ratchet disc. The load is hold securely in any position.

Lowering

If the crank will be rotate counterclockwise, the brake opens minimally. The ratchet disc is fixed by the ratchet pawls and does not rotate.

The load, which is either on the head or the claw, presses the housing down and causes the brake to close again. This process is repeated continuously when the load is released until the winch is unloaded.

With the safety crank (Siku), it is necessary to turn the crank through 360° when lifting and lowering.

The ratchet crank (Raku) works like a hand lever on a manual hoist. By switching the switch lever to lifting or lowering, this crank can be used like a ratchet. This is particularly useful in limited space. Furthermore, this type of crank can also be operated through 360°, as the same braking system as the Siku.

Crank overview (note: please pay attention to the corresponding capacity)

Model	Siku	Raku	Sifeku	Siku (short)	Raku (short)	Siku (elbowed)	Crank with/without folding handle	Safety spring-lock with plug crank
SJ/RSJ		•						
STW-F	•	•						
STW-V	•	•						
STW-FvB				•	•			
ZWW-L							•	
ZWW	•		•					
HB-W						•		
KHB	•							
SCH-W	•		•					•

Siku
Safety crank, zinc-plated

- With one-sided braking effect
- The load is held safely at every height.
- With folding handle

Cranks for rack and pinion jacks
STW-F, STW-V, ZWW, KHB and SCH-W

Model	Art-No.	Capacity kg	Length of crank mm	Square drive mm
Siku 15, zinc-plated.	40006026	1500	250	14
Siku 30, zinc-plated	40006026	3000	250	14
Siku 50, zinc-plated	40006026	5000	250	14
Siku 100, zinc-plated	40006171	10000	300	17
Siku 15, painted	40005461	1500	250	17
Siku 30, painted	40005461	3000	250	17
Siku 50, painted	40005461	5000	250	17

Cranks for steel jacks
STW-FvB

Model	Art-No.	Capacity kg	Length of crank mm	Square drive mm
Siku 15, painted	N00190073	1500	200	14
Raku 15, painted	192034961	1500	200	14

Crank for lifting jack
HB-W

Model	Art-No.	Capacity kg	Length of crank mm	Square drive mm
Siku 15, zinc-plated	N00190074	1500	250	14

INFO

For ordering the crank of the models
STW-F, STW-V, STW-FvB, KHB and SCH-W
it takes note to specify the manufacture year, capacity and the dimension of the square!

Siku & Raku
Safety ratchet crank

- Lifting or lowering movement adjustable by turning a lever.
- The load is held safely at every height.
- With folding handle

Cranks for steel jacks
SJ and RSJ

Model	Art-No.	Capacity kg	Length of crank mm	Square drive mm
Siku 15, painted	N00190008	1500	230	12
Siku 30, painted	N00190022	3000	250	14
Siku 50, painted	N00190053	5000	275	14
Siku 100, painted	N00190044	10000	300	17
Raku 15, painted	192037671	1500	230	12
Raku 30, painted	192037672	3000	250	14
Raku 50, painted	192037672	5000	250	14
Raku 100, painted	192037673	10000	300	17

Cranks for steel jacks
STW-F and STW-V

Model	Art-No.	Capacity kg	Length of crank mm	Square drive mm
Raku 15, verzinkt	40010237	1500	250	14
Raku 30, verzinkt	40010237	3000	250	14
Raku 50, verzinkt	40010237	5000	250	14
Raku 100, verzinkt	40008213	10000	300	17
Raku 15, painted	40004840	1500	250	17
Raku 30, painted	40004840	3000	250	17
Raku 50, painted	40004840	5000	250	17

Rachet pawl kit
for Siku and Raku

P13 for 1.5 t, 3.0 t and 5.0 t

Art.-No. 40003808

P14 for 10.0 t

Art.-No. N040004648

Safety spring crank (Sifeku) or safety spring lock with crank handle

Lifting and lowering

To generate the pre-tension, the spring (3) is manufactured with an oversize in relation to the brake ring (4) and installed.

The pre-tensioning torque which is generated corresponds at the same time to the no-load torque.

Turning the crank (1) clockwise the load will be lifted or supported.
Thereby the spring preload between spring (3) and brake ring (4) is increased.
In this case, the load is hold in any position up to the maximum braking torque and pressed against the brake ring.

The lowering process works in the same way, except that the crank (1) is turned anticlockwise.

Crank pinion

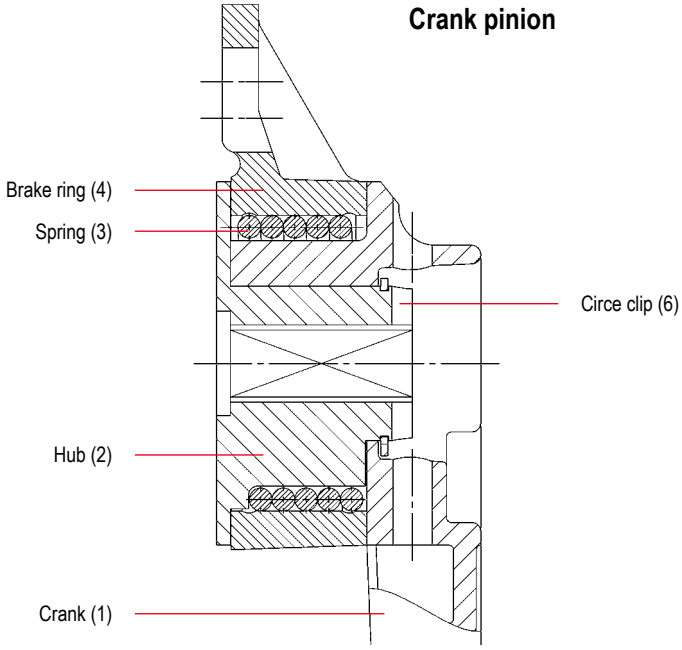

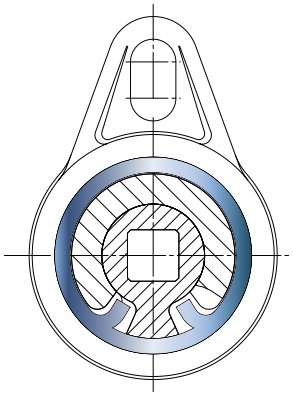

Brake new

the spring has sufficient movement in both directions

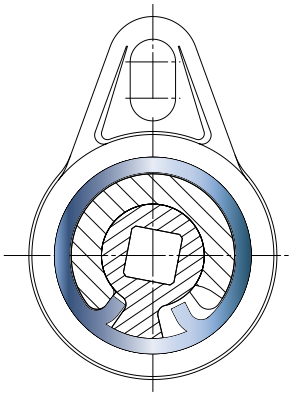

Brake, with braking torque

applied during lifting

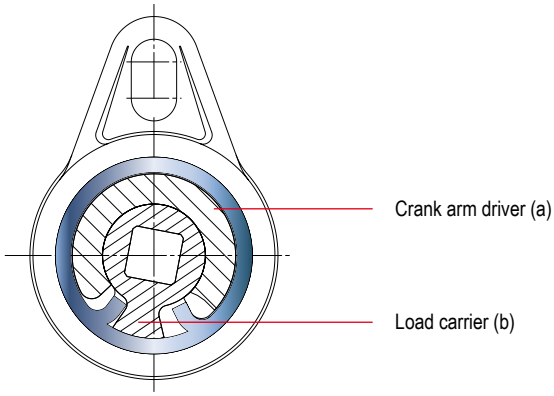

Brake during lowering

Spring (3) is released by the crank arm driver (a) and closed again by the load carrier (b)

Sifeku
Spring loaded safety crank

- Without pawls
- Silent
- Recoil proof
- Maintenance-free
- Enclosed housing
- Weather and temperature resistant
- Braking effect at both ends
- The load is held safely at every height, in the pushing and pulling direction.
- Approved by the TÜV as an independent crank
- With folding handle

Cranks for rack and pinion jacks STW-F, STW-V, ZWW, KHB and SCH-W

Model	Art-No.	Capacity kg	Length of crank mm	Square drive mm
Sifeku 15, painted	40004581	1500	250	14
Sifeku 30, painted	40004581	3000	250	14
Sifeku 50, painted	40004581	5000	250	14
Sifeku 15, painted	40003433	1500	250	17
Sifeku 30, painted	40003433	3000	250	17
Sifeku 50, painted	40003433	5000	250	17

Sifespe
Safety spring-lock with plug crank

- Plug crank removable
- No ratchet pawls in use
- Silent
- Maintenance-free
- Closed housing
- Weather and temperature resistant
- Braking effect at both ends
- The load is held safely at every height
- Handle not folding

Safety spring-lock with plug crank for rack and pinion jacks ZWW, GmZ and SCH-W

Model	Art-No.	Capacity kg	Length of crank mm	Square drive mm
Sifespe, painted	40051858	1500 - 5000	250	14/17
Plug crank Alu	39102698	1500 - 5000	250	17

Worm gear (ZWW-L)

The self-locking worm gear ensures that the load is held securely in any position.

Cranks for rack and pinion jacks ZWW-L

Model	Art-No.	Capacity kg	Length of crank mm	Square drive mm
Standard crank	N00190083	300	200	12
Standard crank	N00190082	600	250	12
Standard crank	N00190083	1200	200	12

Cranks with folding handle for rack and pinion jacks ZWW-L (only optional)

Model	Art-No.	Capacity kg	Length of crank mm	Square drive mm
with folding handle	N00190063	300	200	12
with folding handle	N00190064	600	250	12
with folding handle	N00190063	1200	200	12

Optional:
Crank with folding handle for rack and pinion jacks ZWW-L

SJ
Steel jack acc. to DIN 7355

Capacity 1500 - 10000 kg

Mechanical steel jacks can basically be used to lift almost all kinds of loads in maintenance and repair, ship building, construction as well as agriculture.

Steel winches are used for supporting, placing lifted loads underneath and for assembly work.
The Raku as a standard crank enables working in limited spaces, as it can be used like a ratchet in the direction of lifting and lowering. Alternatively, you can work with the crank 360°.

The field of application includes maintenance and repair, shipbuilding, the construction sector and agriculture.

Features

- The precisely machined gear box with optimal gear ratio ensures a minimum of effort and smooth operation.
- The load is supported either on the claw or the head of the steel jack.
- By turning the operating lever the jack moves smoothly and conveniently up and down along the rack.
- The load is held securely in any position. Inside the load brake the axial brake pressure is generated by the load itself, thus, it is proportional to the size of the load.
- No reduction of capacity on the claw.

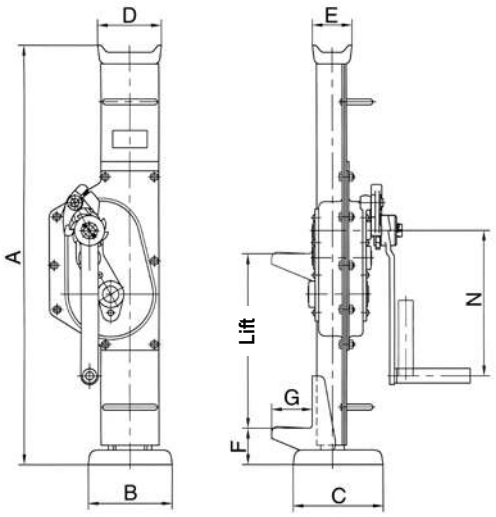

Technical data SJ Raku

Model	Art.-No. Raku	Capacity kg	Height A mm	Lift [1] mm	Hand effort at WLL daN	Weight kg
SJ 15	N01900005	1500	725	360	28	17
SJ 30	N01900002	3000	735	360	28	20
SJ 50	N01900003	5000	730	350	28	27
SJ 100	N01900006	10000	800	410	56	43

[1] Height of lift = Height + Lift

Dimensions SJ

Model	SJ 15	SJ 30	SJ 50	SJ 100
A, mm	725	735	730	800
B, mm	164	200	190	252
C mm	140	140	170	170
D, mm	76	83	108	124
E, mm	38	38	52	65
F, mm	70	70	80	85
G, mm	60	65	71	86
N, mm	225	249	275	300

STW-F
Steel jacks acc. to DIN 7355

with fixed lifting claw

Capacity 1500 - 10000 kg

Steel jacks are traditional hoisting equipment for universal application in the forest and agricultural sector, in the industrial sector for assembly activities and many other fields of application.

Features

- The robust steel design and a toothed rack of solid material increase the service life of the jack.
- Low wear owing to hardened gearing parts and precisely machined teething.
- The precisely machined gears with a high degree of efficiency guarantees low crank forces.
- The load is supported either on the claw or the head of the steel jack.
- Robust base plate for a high level of stability.
- No reduction of capacity on the claw.

STW-F
with fixed lifting claw and Sifeku

Technical data STW-F Siku

Model	Art.-No. **Siku**	Capacity kg	Height A mm	Lift[1] mm	Hand effort at WLL daN	Weight kg
STW-F 15	40021975	1500	720	350	28	12
STW-F 30	40021984	3000	720	350	28	21
STW-F 50	40051705	5000	720	300	28	26
STW-F 100	40051707	10000	792	300	40	42

[1] Height of lift = Height + Lift

Technical data STW-F Raku

Model	Art.-No. **Raku**	Capacity kg	Height A mm	Lift[1] mm	Hand effort at WLL daN	Weight kg
STW-F 15	40022008	1500	720	350	28	12
STW-F 30	40022013	3000	720	350	28	21
STW-F 50	40022019	5000	720	300	28	26
STW-F 100	40051708	10000	792	300	28	42

[1] Height of lift = Height + Lift

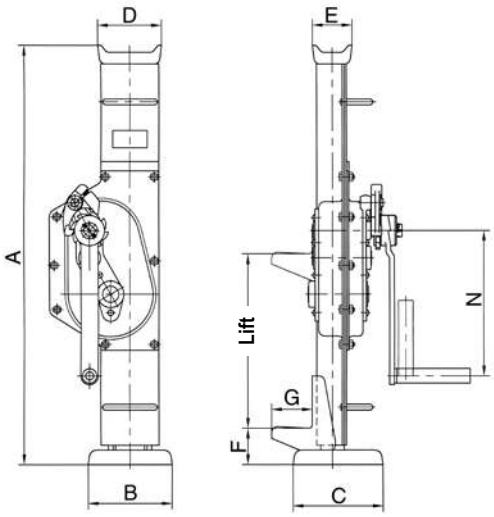

Dimensions STW-F

Model	STW-F 15	STW-F 30	STW-F 50	STW-F 100
A, mm	720	720	720	792
B, mm	130	130	145	145
C, mm	140	140	155	155
D, mm	90	90	110	125
E, mm	50	50	68	80
F, mm	60	61	62	85
G, mm	60	65	70	85
N, mm	250	250	250	300

INFO

STW-F Sifeku on request.

STW-V
1.5 t/3.0 t/5.0 t

STW-V 10.0 t

STW-V
Steel jacks acc. to DIN 7355 with adjustable lifting claw

Capacity 1500 - 10000 kg

The design of the steel jack allows for loads to be picked up and lowered from different heights over the entire length of the steel jack.
The adjustable claw is simply set to the appropriate application height in the load bar for this purpose.

Features

- The claw can be moved to any position on the adjusting rail.
- The load is supported either on the claw or the head of the steel jack.
- Robust base plate for a high level of stability.
- No reduction of capacity on the claw.

Technical data STW-V Siku

Model	Art.-No. Siku	Capacity kg	Height A mm	Lift[1] mm	Hand effort at WLL daN	Weight kg
STW-V 15	N01905000	1500	725	350	28	17
STW-V 30	N01905001	3000	725	350	28	23
STW-V 50	N01905002	5000	725	300	28	29
STW-V 100	N01905003	10000	792	300	40	46

[1] Height of lift = Height + Lift

Technical data STW-V Raku

Model	Art.-No. Raku	Capacity kg	Height A mm	Lift[1] mm	Hand effort at WLL daN	Weight kg
STW-V 15	N01905004	1500	725	350	28	17
STW-V 30	N01905005	3000	725	350	28	23
STW-V 50	N01905006	5000	725	300	28	29
STW-V 100	N01905007	10000	792	300	40	46

[1] Height of lift = Height + Lift

INFO

STW-V Sifeku on request.

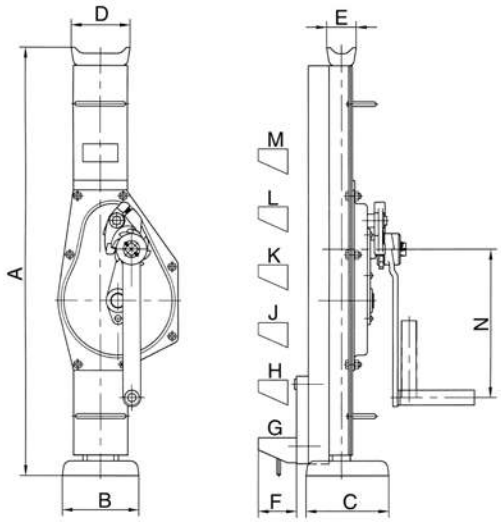

Dimensions STW-V

Model	STW-V 15	STW-V 30	STW-V 50	STW-V 100
A, mm	725	725	725	800
B, mm	130	130	140	140
C, mm	140	140	160	160
D, mm	90	100	110	140
E, mm	50	50	68	76
F, mm	70	70	70	70
G, mm	80	80	80	85
H, mm	Claw freely adjustable on load bar (55 mm steps)			191
J, mm				297
K, mm				403
L, mm				509
M, mm				615
N, mm	250	250	250	300

STW-FvB
Steel jacks acc. to DIN 7355 with fixed lifting claw shortened design

Capacity 1500 kg

Wherever low headroom dimensions are required, the steel jack of shortened design is used.

Features

- The robust steel design and a toothed rack of solid material increase the service life of the jack.
- Low wear owing to hardened gearing parts and precisely machined teething.
- The precisely machined gears with a high degree of efficiency guarantees low crank forces.
- The load is supported either on the claw or the head of the steel jack.
- Robust base plate for a high level of stability.
- No reduction of capacity on the claw.

Technical data STW-FvB Siku

Model	Art.-No. Siku	Capacity kg	Height A mm	Lift[1] mm	Hand effort at WLL daN	Weight kg
STW-FvB 15	30014000	1500	600	300	28	11

[1] Height of lift = Height + Lift

Technical data STW-FvB Raku

Model	Art.-No. Raku	Capacity kg	Height A mm	Lift[1] mm	Hand effort at WLL daN	Weight kg
STW-FvB 15	30014002	1500	600	300	28	11

[1] Height of lift = Height + Lift

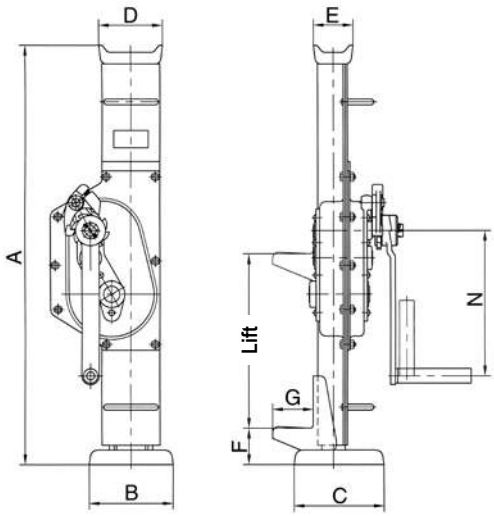

Dimensions STW-FvB

Model	STW-FvB 15
A, mm	600
B, mm	130
C, mm	140
D, mm	90
E, mm	50
F, mm	60
G, mm	60
N, mm	200

INFO

STW-FvB Sifeku on request.

RSJ
Rail jacks acc. to DIN 7355

Capacity 5000 kg

Track rails can be quickly and safely lifted by means of this jack, also under unfavourable conditions.
The shoe-type foot with a wider support surface makes it possible to apply the jack between the sleepers and the tracks.

Features

- The precisely machined gear box with optimal gear ratio ensures a minimum of effort and smooth operation.
- The load is supported either on the claw or the head of the steel jack.
- By turning the operating lever the jack moves smoothly and conveniently up and down along the rack.
- The load is held securely in any position. Inside the load brake the axial brake pressure is generated by the load itself, thus, it is proportional to the size of the load.
- No reduction of capacity on the claw.

INFO

On page 200 you will find also rail grab.

Technical data RSJ Raku

Model	Art.-No. **Raku**	Capacity kg	Height A mm	Lift [1] mm	Hand effort at WLL daN	Weight kg
RSJ 50	N01900008	5000	740	360	28	29

[1] Height of lift = Height + Lift

Dimensions RSJ

Model	**RSJ 50**
A, mm	740
B, mm	200
C mm	250
D, mm	108
E, mm	52
F, mm	90
G, mm	71
N, mm	275

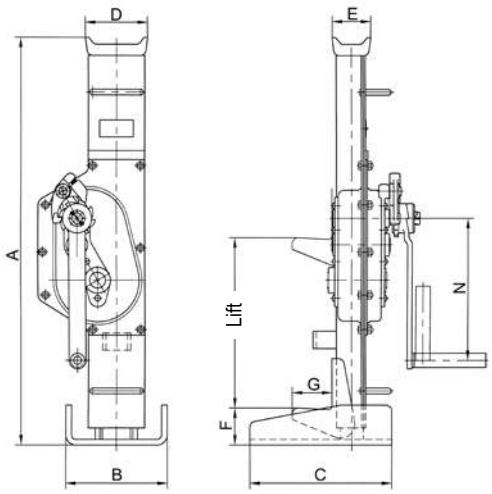

Yaletaurus
Ratchet jack

Capacity 10000 kg

Mechanical ratchet jacks with lifting claw are designed for operation in confined areas where space below the load is restricted, thus preventing the use of traditional lifting equipment. The Yaletaurus is the ideal unit for lifting, positioning or transportation of machines resp. heavy objects as well as for repair and assembly jobs in cramped areas and under toughest conditions.
In spite of its capacity of 10000 kg the Yaletaurus has a weight of just 30 kg and the integrated carrying handle makes it a portable, versatile tool.
With a hand force of 45 kg on the detachable hand lever, the Yaletaurus will lift, press, push or lower a load of 10000 kg in any direction. A standard crank wheel will bring the jack quickly to the required position.

Features

- Automatic screw-and-disc type load brake.
  The axial brake pressure is generated by the load itself and is, therefore, proportional to the size of the load.
  The load is held secure in any position.
- Single part housing made from spheroidal cast iron with integrated lifting claw.
- The screw-and-disc type load brake originates from the Yale PUL-LIFT® (spare parts are easily available).
- Low lever pull and long life endurance due to optimum gearing and high quality materials.

Technical data Yaletaurus

Model	Art.-No.	Capacity on the head kg	Capacity on the claw kg	Height A mm	Lift [1] mm	Hand effort at WLL daN	Weight kg
Yaletaurus	N0130003	10000	7000	505	295	45	30

[1] Height of lift = Height + Lift

Dimensions Yaletaurus

Model	Yaletaurus
A, mm	505
B, mm	170
C mm	125
D, mm	95
E, mm	65
F, mm	75
G, mm	75
H, mm	238
J, mm	217
N, mm	647

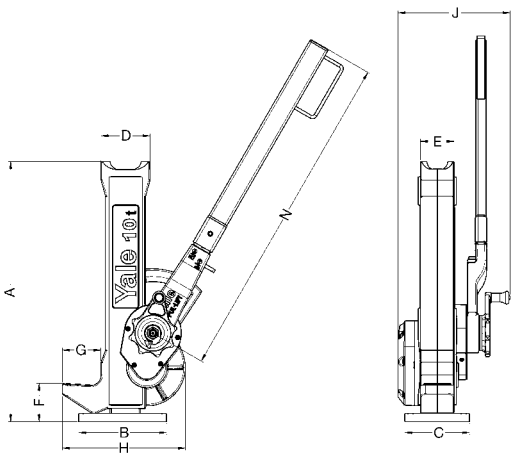

ZWW-L
capacity 300 kg and 600 kg

ZWW-L
capacity 1200 kg

ZWW
capacity 1500 kg

ZWW
capacity 10000 kg

ZWW-L and ZWW Rack & pinion jacks

Capacity 300 - 10000 kg

Wall-mounted rack and pinion jacks are used for lifting, lowering, pulling and pushing of loads.

Features

- Robust steel design with precisely machined worm and spur gears for smooth and easy manual operation.
- Solid steel rack with additional bore hole for fastening of the load.
- Low wear owing to hardened gearing parts and precisely machined teething.
- Up to 1200 kg lifting load for pushing or pulling loads are equal.
- At standard tensile load from 1500 - 10000 kg. Compressive load possible on request.
- Rigid wall mounting.

Optional

- Improved corrosion protection owing to zinc-plating or special coating of rack (from capacity 1500 kg).
- Different rack length on request.
- Symmetrical toothing for model ZWW on request.
- Crank with folding handle for ZWW-L.

INFO

ZWW-L with capacities of 600 and 1000 kg are also available in explosion-proof design.

We are pleased to send you our new Atex catalogue in PDF format.

Technical data ZWW-L

Model	Art.-No.	Tensile or pressure load kg	Rack length mm	Lift mm	Lift per crank rotation mm	Hand effort at WLL daN	Weight kg
ZWW-L 300/400	NO1905011	300	600	400	11	10	5.4
ZWW-L 600/400	NO1905012	600	600	400	11	15	6.0
ZWW-L 300/600	NO1905013	300	800	600	11	10	5.9
ZWW-L 600/600	NO1905014	600	800	600	11	15	6.5
ZWW-L 1200/600	NO1905015	1200	800	600	3.6	14	9.5
ZWW-L 300/800	NO1905016	300	1000	800	11	10	6.4
ZWW-L 600/800	NO1905017	600	1000	800	11	15	7.0
ZWW-L 1200/800	NO1905018	1200	1000	800	3.6	14	10.6
ZWW-L 600/1000	NO1905020	600	1200	1000	11	15	7.5
ZWW-L 1200/1000	NO1905021	1200	1200	1000	3.6	14	11.7
ZWW-L 600/1200	NO1905023	600	1400	1200	11	10	6.0

Technical data ZWW with Sifeku

Model	Art.-No. **Sifeku**	Tensile load kg	Rack length mm	Lift mm	Lift per crank rotation mm	Hand effort at WLL daN	Weight kg
ZWW 1500/800	40055131	1500	1090	800	14	28	11
ZWW 3000/565	40056138	3000	975	565	9	28	19
ZWW 5000/700	40057134	5000	1170	700	4.5	28	28

Technical data ZWW with Siku

Model	Art.-No. **Siku**	Tensile load kg	Rack length mm	Lift mm	Lift per crank rotation mm	Hand effort at WLL daN	Weight kg
ZWW 10000/700	40058009	10000	1240	700	3.2	40	55

Dimensions ZWW und ZWW-L

Model	ZWW-L 300	ZWW-L 600	ZWW-L 1200	ZWW 1500	ZWW 3000	ZWW 5000	ZWW 10000
A, mm	20	20	25	35	45	50	60
B, mm	20	25	35	25	30	40	50
C, mm	–	–	–	215	280	330	380
Ø D, mm	11	13	16,5	21	21	21	30
E, mm	16	20	20	20	25	25	30
F, mm	130	130	127	135	165	140	160
G, mm	119	119	98	151	212	219	269
H, mm	200	200	180	310	395	400	480
I, mm	–	–	35	168	179	197	200
J, mm	38	35	30	26	31	37	40
K, mm	–	–	–	100	120	120	140
L, mm	60	60	140	130	160	160	180
M, mm	170	170	140	260	305	320	410
Ø N, mm	11	11	13	13	15	17	21
O, mm	–	–	100	110	120	105	125
P, mm	–	–	–	40	50	50	60
Q, mm	10	10	–	8	10	10	10
R, mm	200	250	200	250	250	250	300
S, mm	110	110	110	130	130	130	250
T, mm	–	–	–	42	86	109	150
U, mm	–	–	–	43	53	70	88
X, mm	–	–	–	20	25	45	30
Ø Z, mm	–	–	–	–	–	–	–

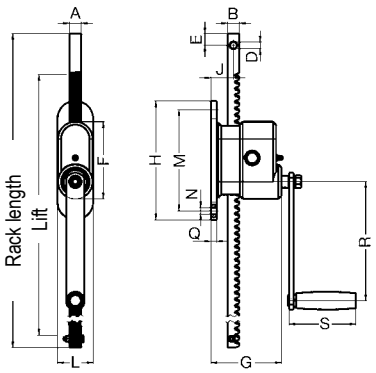

ZWW-L, capacity 300 - 600 kg

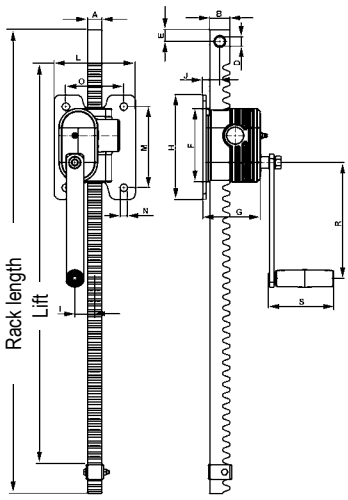

ZWW-L, capacity 1200 kg

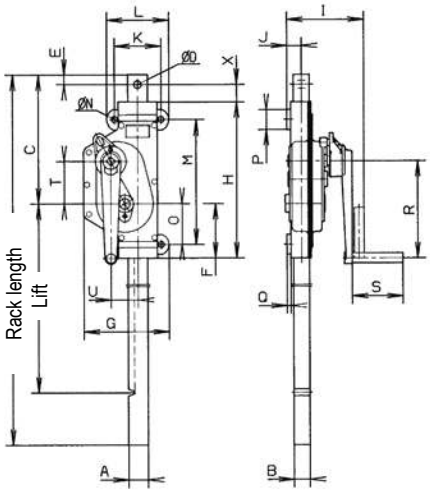

ZWW, capacity 1500 - 10000 kg

On systems with several racks in line at 90° to the crank axis

- Self-locking action **only gear unit with crank**
- Crank force = 15 kg, at a **maximum** total load of 1000 kg
- Connection to 1" Rohr (DIN 2440) on building side
- This combination is also possible for ZWW-L 300 and ZWW-L 600.

ZWW-L combinations

Capacity 1200 kg

Where it is important to lift as evenly as possible (levelling), wall-mounted rack and pinion wall jacks can also be coupled, whereby the direction - depending on the model - is irrelevant.

The wall mounted rack and pinion jacks can be combine about 3/4" and/or 1" pipes (DIN 2440). When connecting pipes over a length of 2 m, we recommend the pipes to stabilize so that it does not droop in the middle.

We like to advise you in this case.

On systems with several racks in line to the crank axis

- Self-locking action in **every gear unit**
- Crank force = 15 kg with a total load of 1000 kg
- Connection to 3/4" tube (DIN 2440) on building side

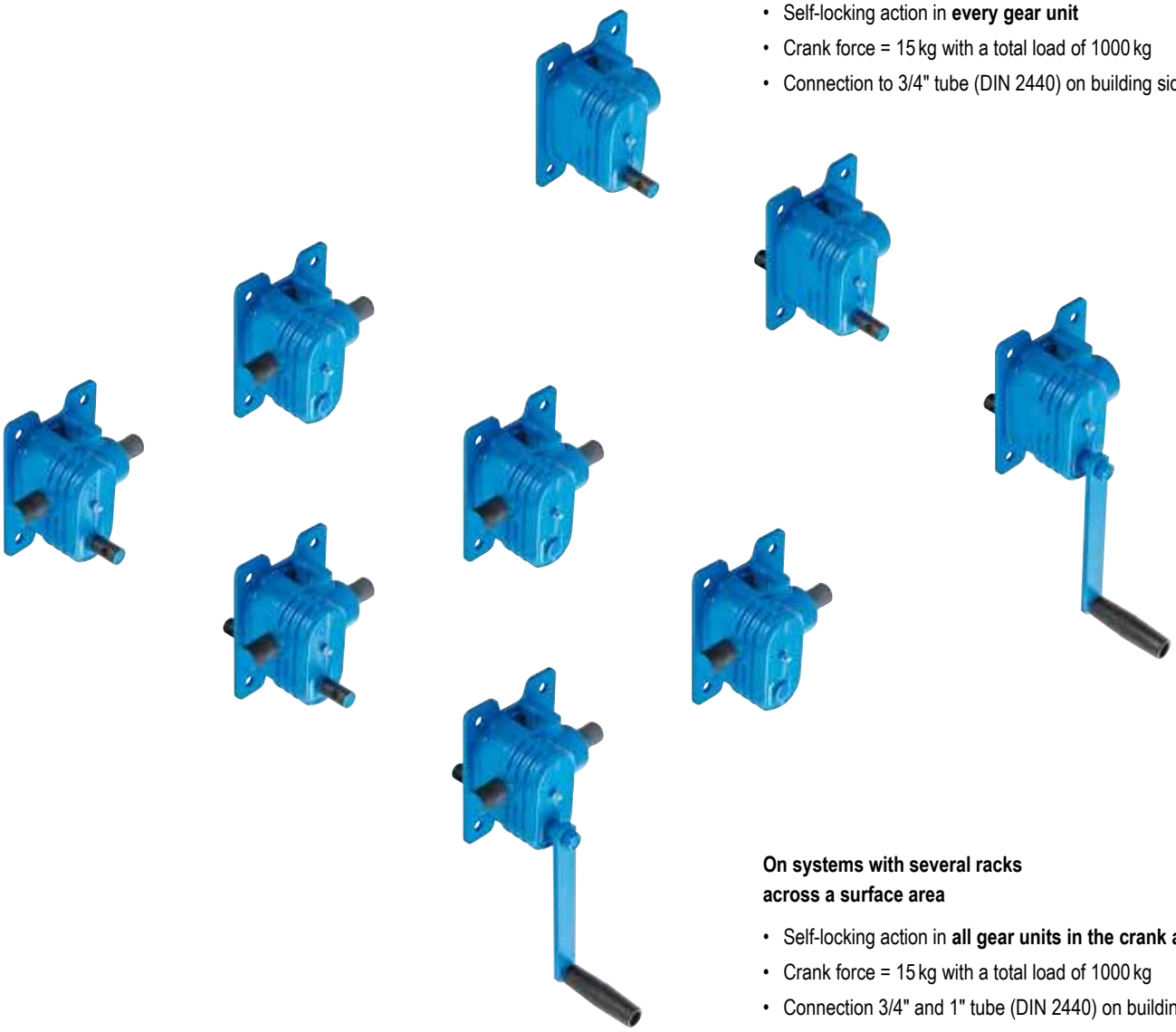

On systems with several racks across a surface area

- Self-locking action in **all gear units in the crank axis**
- Crank force = 15 kg with a total load of 1000 kg
- Connection 3/4" and 1" tube (DIN 2440) on building side

25
25

Crank
in special design
on request
Art.-No. N00190074

HB-W
Lifting jack

Capacity 1500 kg

The stable lifting jack with integrated 1.5 t steel jack for supporting tube and bar material.

Features

- Load will be fixed in each position safely by a load brake system.
- Large base plate for a high level of stability.
- Wheels for easy transport.

Optional

- The attachable support roller facilitates the sliding of heavy loads.

Technical data HB-W

Model	Art.-No. Siku	Capacity kg	Height mm	Lift [1] mm	Hand effort at WLL daN	Lift per crank rotation mm	Weight kg
HB-W 1500	N01900014	1500	650	350	28	15	40

[1] Height of lift = Height + Lift

Technical data supporting roller HB-A

Model	Art.-No.	Capacity kg	Height with supporting roller mm	Weight kg
Supporting roller	30060011	1500	705	5

Dimensions HB-W

Model	HB-W 1500
A, mm	300
B, mm	500
C_{ein}, mm	650
D_{aus}, mm	1000
E, mm	100
F, mm	320
G, mm	300
H, mm	385

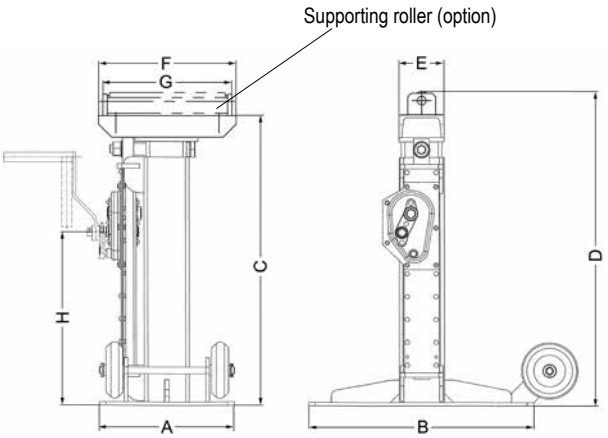

KHB
Truck body lifting jack

Capacity 5000 and 8000 kg

Truck body lifting jacks are used for supporting vehicle bridges, swap bodies and trailers; they are also used in vehicle construction and freight forwarding applications.

Features

- High-quality, torsionally stiff steel design with large base plate for a high level of stability.
- Hardened gearing parts and precisely machined teeth-ing for improved handling and low wear.
- The load can either be supported on the head or on the adjustable claw.

KHB 5
capacity 5000 kg

KHB 8
capacity 8000 kg

Technical data KHB Siku

Model	Art.-No. Siku	Capacity kg	Height mm	Lift[1] mm	Hand effort at WLL daN	Dim. B mm	Dim. C mm	Dim. D mm	Dim. E mm	Dim. F mm	Dim. O/P mm	Weight kg
KHB 5000/500	30077011	5000	1100	500	18	540	500	80	140	250	70/70	80
KHB 8000/500	30080012	8000	1100	500	26	540	500	100	170	300	150/180	111

[1] Height of lift = Height + Lift

Step height of adjustable lifting claw

Model	KHB 5000	KHB 8000
1. step, mm	175	290
2. step, mm	230	396
3. step, mm	285	502
4. step, mm	340	608
5. step, mm	395	714
6. step, mm	450	820
7. step, mm	505	926
8. step, mm	560	1032
9. step, mm	615	–
10. step, mm	670	–
11. step, mm	725	–
12. step, mm	780	–
13. step, mm	835	–
14. step, mm	890	–

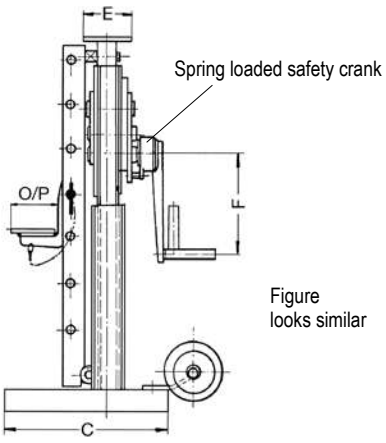

Figure
looks similar

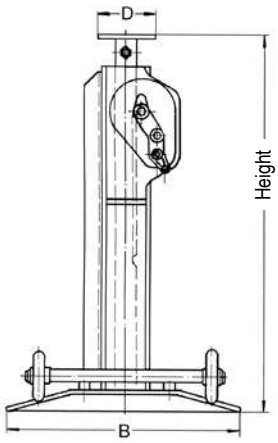

Model S 20

Model S 24

S 20 and S 24
Worm gear drive unit

The worm gear drives are suitable for a large variety of applications in construction for moving or turning loads, as gears for rope drums or chain sprockets or slewing drives.

Features

- Enclosed housing for the protection of parts inside.
- Enclosed and precisely machined gear for little effort and a long service life.

Technical data S 20 and S 24

Model	Art.-No.	Ratio	Drive torque daNm	Required crank effort daN	Shaft length mm	Shaft diameter mm
S 20	32626004	20:1	12	11	196	25
S 24	32626020	24:1	36	22	200	36

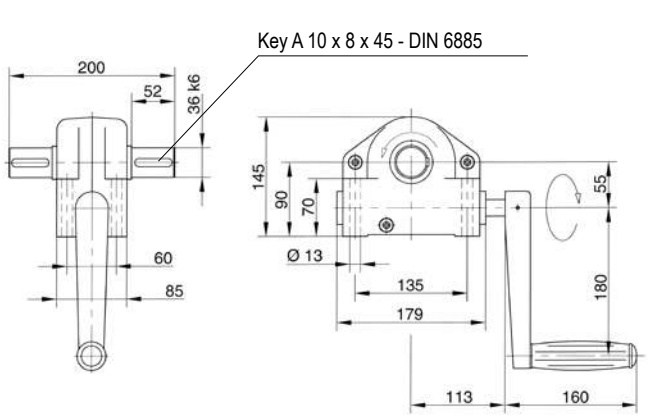

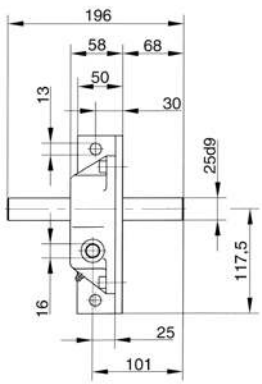

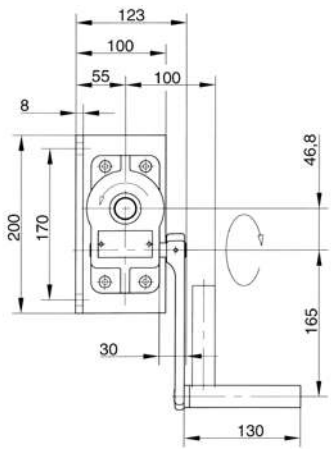

SCH-W
Sluise gate jack

Capacity 1500 - 10000 kg

The reliable sluice gate jack for opening and closing gates in sluices.

Features

- The spring loaded safety crank permanently holds the sluice gate closed with pressure.
- Hardened gearing parts and precisely machined teeth-ing for improved handling and low wear.

Technical data SCH-W Sifeku

Model	Art.-No. **Sifeku**	Tensile or pressure load[1] kg	Rack length mm	Lift mm	Hand effort at WLL daN	Weight kg
SCH-W 15	40051714	1500	1200	800	28	18
SCH-W 30	40051717	3000	1250	800	28	23
SCH-W 50	40051720	5000	1350	900	28	32

[1]The pressure force is reduced with a larger lift (loading case II to Euler)

Technical data SCH-W Siku

Model	Art.-No. **Siku**	Tensile or pressure load[1] kg	Rack length mm	Lift mm	Hand effort at WLL daN	Weight kg
SCH-W 100	40051722	10000	1550	1000	40	56

INFO

Please fill in the questionnaire on the next page for sluice gate jack systems.

Dimensions SCH-W

Model	SCH-W 15	SCHW-30	SCHW-50	SCH-W 100
A, mm	35	45	50	60
B, mm	25	30	40	50
C, mm	140	160	145	165
D, mm	85	60	45	65
E, mm	125	204	189	235
F, mm	78	92	100	112
G, mm	175	230	260	320
H, mm	310	395	400	480
I, mm	33.5	39.5	51	59
J, mm	43.3	53.1	69.5	88.3
K, mm	121	138	81	84
L, mm	230	230	230	290
M, mm	90	90	90	115
N, mm	153	158	173	183
O, mm	52.5	55	61	66
P, mm	52.5	55	64	70
Ø Q, mm	14	14	14	14
R, mm	7	7	7	8
S, mm	76.5	85.5	88	100
T, mm	100.5	108.5	120	140
U, mm	113	121	132	185
V, mm	86	94	105	–
W, mm	136	144	155	–
X, mm	130	130	130	250
Y, mm	250	250	250	300

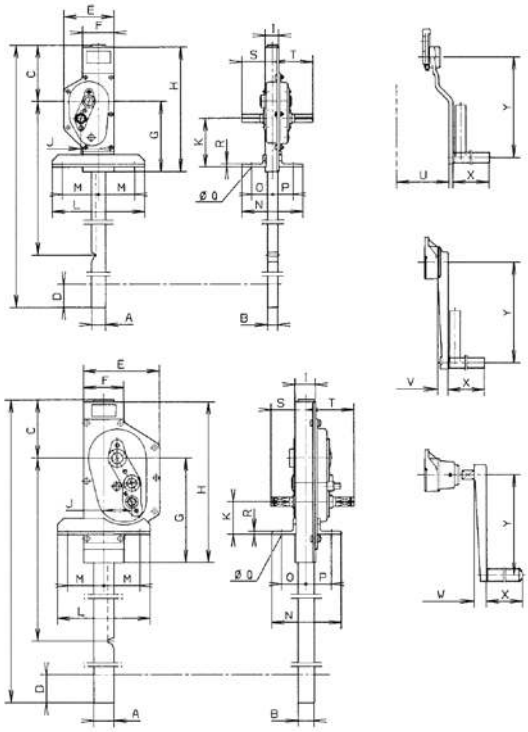

Technical questionnaire to identify a suitable sluice gate jack systems

Company: _____ Date: _____

Contact: _____ e-Mail: _____

Phone: _____ Fax: _____

☐ Manual drive

Manual operating force _____ kN

Sluice gate

Thickness _____ mm

Material

☐ Wood

☐ Steel

Weight _____ kg

Friction coefficient

☐ Steel/Wood

☐ Steel/Rubber

☐ Roller gate

☐ Motor drive with manual emergency drive

Lifting speed ☐ Standard

_____ m/min

Operating voltage _____ V

_____ Hz

☐ 230/400 V, 50 Hz three-phase current

Motor rating

Load cycles per hour _____

Lift per load cycle _____

Surrounding temperature _____

Remark

_____

Quantity

_____

Accessories

☐ Lifting motion limitation

☐ Electrical cut-out by safety clutch

☐ Auma rotary drive

Indicate local conditions and water levels

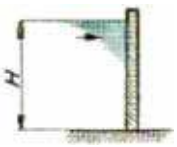

H = _____

☐ without water below

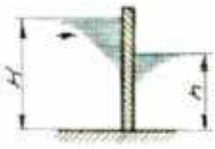

H = _____

h = _____

☐ with water below

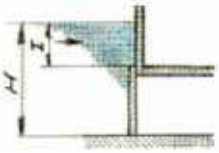

H = _____

l = _____

☐ completely in water above

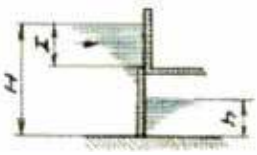

H = _____

l = _____

h = _____

☐ completely in water above, partly in water below

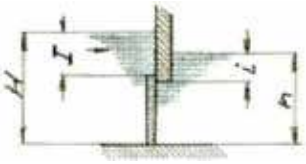

H = _____

l = _____

h = _____

i = _____

☐ completely in water above and in water below

Technical questionnaire to identify a suitable sluice gate jack systems

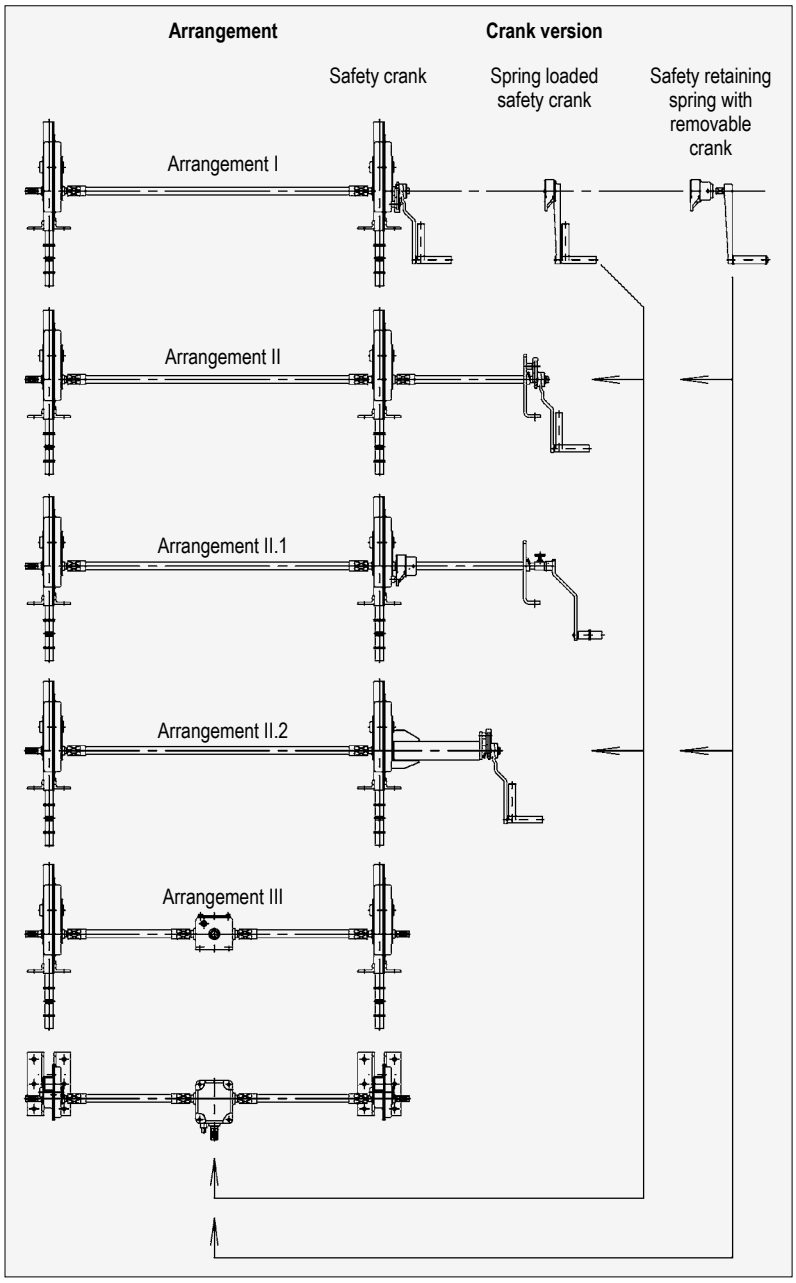

Arrangement

Crank version

(Retaining springs not possible for 10 t model)

Date

Name
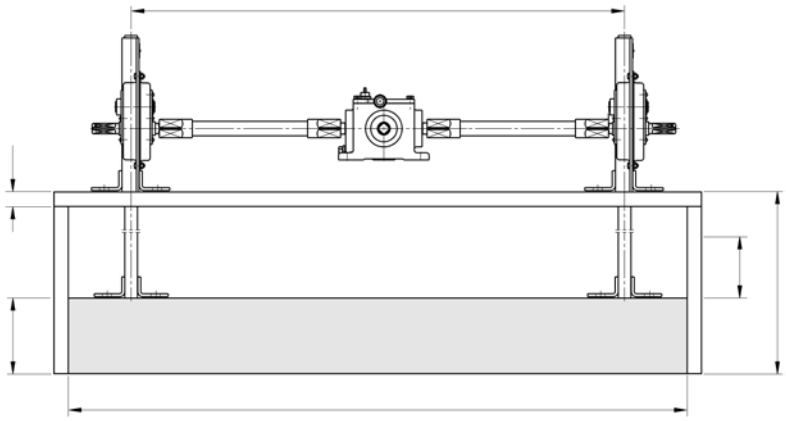
Application