Yale

Catalogue No.5

4/2024

CMCO
INTELLIGENT MOTION
Columbus McKinnon

About Columbus McKinnon

Columbus McKinnon has over 150 years of history and is a global leader in lifting and intelligent motion control technology.

Its innovative portfolio of high-quality brands including Stahl CraneSystems, Yale, Pfaff-silberblau and Dorner, addresses the needs of our customers by enhancing business safety and promoting their growth and efficiency.

Experience, expertise and innovation combined with a broad understanding of user requirements are the winning formula on which our product portfolio of hoists, material handling equipment and load handling devices has long been based.

Columbus McKinnon is a global organization headquartered in Buffalo, New York. Its global presence includes offices and manufacturing facilities in North America, Latin America, Europe, Africa and Asia.

Columbus McKinnon
Industrial Products GmbH
Yale-Allee 30, 42329 Wuppertal

www.cmco.com

The brand STAHL CraneSystems

The STAHL CraneSystems brand stands for reliable and safe hoists and crane components as well as methodical engineering solutions.

The products are used in standard, special and explosion-protected bridge cranes or hoisting systems in industries such as automotive, oil and gas, power station construction, chemical industry, transport and logistics, steel and concrete industry, mechanical and plant engineering, air and road transport industry as well as in the pharmaceutical and food industry.

The brand Yale

Yale is the leading brand in Europe for standard manual hoists. Delivered ready for use, the devices are used in a variety of industrial and commercial sectors worldwide: in construction, mechanical engineering, transport, energy & water management, oil & gas and paper production.

The application-oriented range as well as all innovative new and further developments of Yale products are constantly raising the bar in terms of quality, reliability and safety. The wide range of products includes hoists, cable pullers, jib and gantry cranes, load handling equipment and weighing technology, hydraulic tools, heavy-duty load moving systems, pallet trucks and stackers, textile lifting and lashing equipment.

Lifting Distribution

Lifting Solutions

Conveyance Solutions

Linear Motion Solutions

The brand pfaff-silberblau

Pfaff-silberblau has been a technological leader in drive and lifting technology for 150 years. Innovative complete solutions with worm gear screw jacks, electromechanical components of linear drive technology or hoists for steel and heavy industry, logistics, stage technology, for off-shore plants and ATEX areas. With this unique portfolio of hoisting gear units, customers can combine components and solutions according to their needs. The Pfaff portfolio of winches ranges from manual winches for standard applications to winches driven by electric motors.

Whether you're travelling above or underground – Pfaff-silberblau Rail Technology plays a vital "behind the scenes" role to ensure trains are running safely and efficiently. Our product range includes mobile lifting jacks, lifting platforms, as well as special customized equipment and complete under-floor lifting systems. To cover all maintenance and repair work on bogies, wheel sets and vehicle chassis, Pfaff-silberblau has the optimal solutions for your workshop.

The brand Dorner

Precision conveyors – solving industrial, packaging, and sanitary conveyance needs. Founded in 1966 in Hartland, Wisconsin, Dorner is a global leader in the design, application, manufacturing, and integration of conveyor systems. Customers all over the world turn to Dorner to achieve improved efficiency, productivity, and a positive ROI.

Dorner is transforming conveyor automation with cutting edge solutions and best in class support. Our team of conveyance experts meet the challenges of various industries head on, and create unique conveyor systems to meet our customers needs.

Training

As a manufacturer, we have many years of experience in inspecting and repairing products in the field of lifting technology. We would like to pass on this knowledge to our customers and offer seminars in our training centre in Wuppertal seminars for “qualified person” in accordance with DGUV regulation 54 for winches, lifting and pulling equipment.

These are not only product training courses, but seminars that provide participants with up-to-date insider information and a solid knowledge of the handling of rope, lifting and slinging technology.

The most modern communication techniques, a portion of practice and optimally designed seminar materials guarantee a quick and lasting seminar success.

INFO

All seminars can also be held in-house if required!

Zertifikat

Herr Max Mustermann
World Industries
Globusstrasse 4-8
54321 Wuppertal

hat am 10. Januar 2022 an einer Schulung für „zur Prüfung befähigte Person“ von

Winden, Hub- und Zuggeräten

mit Erfolg teilgenommen.

Er wurde gemäß der BetrSichV und DGUV Vorschrift 54 unterwiesen.

Wuppertal, 20. Januar 2022

COLUMBUS McKINNON Industrial Products GmbH

Certified security

You are in safe hands - Every unit is supplied with operating instructions, CE declaration of conformity resp. manufactures works test certificate, which confirms the perfect tested status of the product.

Additional documentation, e.g. spare parts manuals or maintenance and repair instructions are available on request or at our homepage:

www.cmco.com

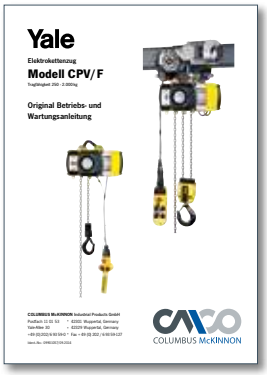

Yale
Elektrokettenzug
Modell CPV/F
Tragfähigkeit 250 - 2.000kg

Original Betriebs- und Wartungsanleitung

Yale

Stirnradflaschenzug
Hand chain hoist
Palans à main

Yale lift 360
WLL 500 - 20.000kg

Offering advice

Our qualified personnel are there for you around the globe at all our locations, as well as specialised dealers who provide competent know-how and service.

Business hours

Monday – Thursday	08:00 a.m. – 04:30 p.m.
Friday	08:00 a.m. – 03:30 p.m.

Shipping

Monday – Thursday	06:30 a.m. – 04:30 p.m.
Friday	06:30 a.m. – 03:00 p.m.

ISO 9001

CERTIFIED QUALITY MANAGEMENT SYSTEM

DIN EN ISO 9001

Columbus McKinnon Industrial Products GmbH manufactures world wide according to uniform, controlled standards of EN ISO 9001. This is a guarantee for our business partners that given standards in design and development, manufacturing, assembly and service are complied with.

Special documentation

Further inspections in form of 2.2 or 3.1 certificates according to EN 10204, GOST R certificates or specific pre-shipment inspections e.g. by DNV or GL can be carried out at cost on request.

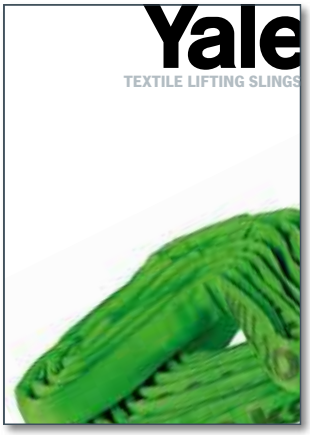

Hoisting Equipment

Ratchet lever hoists
Hand chain hoists
Corrosion protection
Trolleys & Trolley clamps
Electric & Pneumatic chain hoists
Chains & Accessories
Manual winches
Cable puller & Accessories
Electric winches
Rack & Pinion jacks

Crane Systems

Wall mounted jib cranes
Floor mounted jib cranes
Gantry cranes

Power Supply

Tigrip® Load Hoisting Tackle

Grabs & Clamps
Permanent load lifting magnets
Lifting lugs & C-hooks
Barrel grabs & Crate grabs
Load hoisting tackle for underground construction
Clamps & Tine hooks
Spreader beams
Crane forks

Tigrip® Crane Weighers

Crane weighers
Load indicator

Spring Balancers

Spring tensioners
Spring balancers

Textile Lifting Slings

Round slings
Round sling assembly
Webbing slings

Lashing Systems

Textile lashings
Special textile lashings

Entertainment

Round slings & Accessories
Theater load belts
Textile lashings

Material Handling Equipment

Hand pallet trucks
Hand pallet trucks with weighing system
Scissor pallet trucks
Electric pallet trucks
Manual drive stackers
Electric pedestrian stackers
Elevating platforms

Load Moving Systems

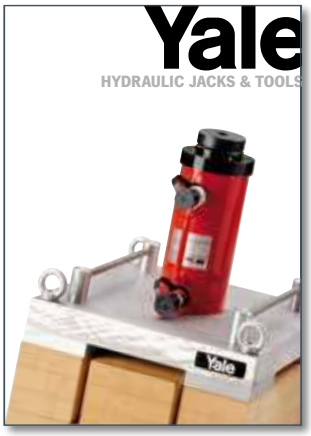

Hydraulic Jacks & Tools

Hydraulic cylinders, single-acting
Hydraulic cylinders, double-acting
Hand pumps 700 bar
Hand pumps up to 2000 bar
Foot pump 700 bar
Electric & Pneumatic motor pumps
Electric hydraulic power packs
Valves & Accessories
Puller & Jacks
Hydraulic Jacks & Tools
Test rigs
Presses

Workshop Equipment

INFO

Please note our user instructions at the beginning of each chapter

Information about ATEX products and explosion protection can be found in our ATEX catalogue!

Please contact us for further information!

Hoisting Equipment
STAHL CraneSystems

Precision Conveyors
Dorner

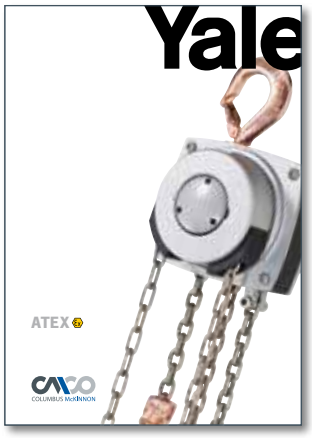

ATEX

Pneumatic chain hoists
Hand chain hoists
Trolleys
Rack & Pinion jacks
Ratchet lever hoists

More products like:
Electric & manual winches, sheave blocks or electric chain hoists on request.

Table of contents

	Page
Hoisting Equipment	8 - 149
Crane Systems	150 - 159
Power Supply	160 - 161
Tigrip®	
Load Hoisting Tackle	162 - 227
Crane Weighers	228 - 233
Spring Balancers	234 - 241
Textile Lifting Slings	242 - 264, 287
Lashing Systems	265 - 281
Entertainment	282 - 286
Material Handling Equipment	288 - 341
Load Moving Systems	346 - 351
Hydraulic Jacks & Tools	352 - 441
Workshop Equipment	442 - 445
Precision Conveyors	446 - 453
General Terms and Conditions	454 - 455

Hoisting Equipment

Yale and Pfaff-silberblau hoisting equipment products are reliable and proven equipment renowned world-wide for applications in industry, trade and services.
The comprehensive range includes manual and powered hoisting equipment for a safe lifting and handling of loads ranging from 125 kg to 50000 kg. The products feature a long service life as well as easy and quick maintenance or repair.
Yale and Pfaff-silberblau hoisting equipment products comply with national and international regulations such as the EC Machinery Directive 2006/42/EC and corresponding supplements. In order to meet our high quality standard, the devices are subjected to an overload test in the factory and provided with a test certificate and operating instructions with a declaration of conformity or a manufacturer's declaration.

INFO

Please note our user instructions at the beginning of each chapter.

Table of contents

	Page
Ratchet lever hoists	14 - 30
Hand chain hoists	31 - 49
Corrosion protection	50 - 53
Trolleys & Trolley clamps	54 - 61
Electric & Pneumatic chain hoists	62 - 89
Chains & Accessories	90 - 93
Manual winches	94 - 105
Cable puller & Accessories	106 - 111
Electric winches & Accessories	112 - 127
Rack & Pinion jacks	128 - 147
Crane Systems	148 - 159
Power Supply	160 - 161

Yale

HOISTING EQUIPMENT

INFO

This user information presents a general review regarding the operation of hoisting equipment and does not substitute the existing operating instructions for the specific hoist product.

Lifting operations with hoisting equipment may be carried out by competent users (trained in theory and practice) only.
When operated correctly, our hoist products will offer the highest degree of safety in line with long life expectancy and avoid damage to the product and people.

Modification of delivery condition

Design and construction of the hoist may not be altered, e.g. by installation of outside supplied parts, bending, welding, grinding, removal of safety relevant components like locking devices, locking pins, safety latches etc.

Limitations of operation

Loading

Our hoists have been designed for lifting and transporting of loads. Some models (e.g. ratchet lever hoists) may also be used for pulling and lashing purposes, if admitted in the operating instructions. The indicated capacities refer to loading in straight line and must not be exceeded. Lifting media (e.g. lifting chain or rope) must not be slung over edges and must not be used for the attachment of the load!

Temperature

Hoists may normally be operated at ambient temperatures between -10°C up to +50°C.

These values are approximate and may deviate from the specific givings of the hoist product. The accurate data are given in the current operating instructions. Special models are available on request for higher or lower temperature ranges.

Attention: At temperatures below 0°C the brake should be checked for freezing. (Check lifting function prior to starting work and refer to “Inspection prior to initial operation”).

Shock loading

The indicated capacities are based on shock-free loading of the hoist. Light bumps as occurred during lifting and lowering as well as transporting of load are admitted. Heavier shock loadings, e.g. falling of the load, are strictly forbidden!

Chemicals

Hoists and attachments may not be operated without hesitation in the area of chemicals or chemical vapours – consult our specialists for advice. Hoists which have been subject to chemicals or vapours must be taken out of service and inspected by us.

Transport of people

Transport of people with hoisting equipment is generally forbidden! Transport of people may only by carried out with specially authorized products (e.g. Yaletrac, Mtrac).

Operation in danger zones

Lifting or transport of loads must be avoided while personnel are in the danger zone.
People are not allowed to pass over or under a suspended load.

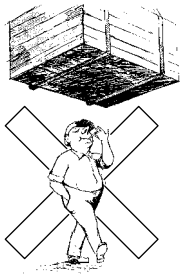

Electrical hazards

Load carrying hoist components (e.g. load chain) must not be subject to electric current and must never be used as a ground connection during welding. Further electrical hazards, e.g. with powered hoists, are indicated in the specific operating instructions!

Electric connections may only be performed by authorized persons resp. companies!

INFO

You will find the General Terms and Conditions at the end of the catalogue.

Please note the information on our training courses on page 4.

Application advices

- Hoists must always be in perfect condition and provided with a legible identity plate.
- Prior to starting work, the hoist including load carrying devices, equipment, supporting structure and suspension must be inspected for obvious deficiencies and failures. In addition, the function of the brake and the correct attachment of hoist and load have to be checked by carrying out a short work cycle of lifting/ pulling or tensioning and releasing.
- Inspect the load chain for sufficient lubrication and visually check for external defects, deformations, superficial cracks, wear or corrosion marks.
  A defective chain must be replaced prior to operation of the hoist.
- Units equipped with two chain falls should be inspected for twisted or kinked chains prior to being put into operation. The chains of multiple fall hoists may be twisted if the bottom block was turned over.

- Inspect top and bottom hooks for deformations, damage, cracks, wear or corrosion marks. A safety latch must be available and work effectively.
- Hoists with obvious defects and units which have been subject to overload or other dangerous influences have to be taken out of service and may only be operated after test and repair if so required.
- When selecting the proper product, make sure that the hoist is suitable to accept transportation, suspension, type of lashing devices and lashing points safely and without unintended movement (e.g. slipping).
- Load chains must not be used in kinked or knotted condition.
- The load must always be seated in the saddle of the hook.
  Never attach the load on the tip of the hook. This applies to top and bottom hooks.

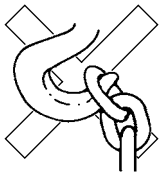

- The operator must ensure that the load is attached in a manner that does not expose himself or other personnel to danger by the hoist, chain(s) or the load.
- During lifting operations the load and suspension hook of the hoist must be perpendicular to the load center to prevent pendle motion of the load!
- The operator may start moving the load only after it has been attached correctly and all personnel are off the danger zone.
- Before lifting make sure that the load can move freely.
- After lifting or tensioning, a load must not be left unattended for a longer period of time.
- Chain stops, slipping clutches etc. are overload protection devices and may not be used as regular load limiters.
- Do not throw the hoist down. Always place it properly on the ground.

INFO

Labelling (Example)

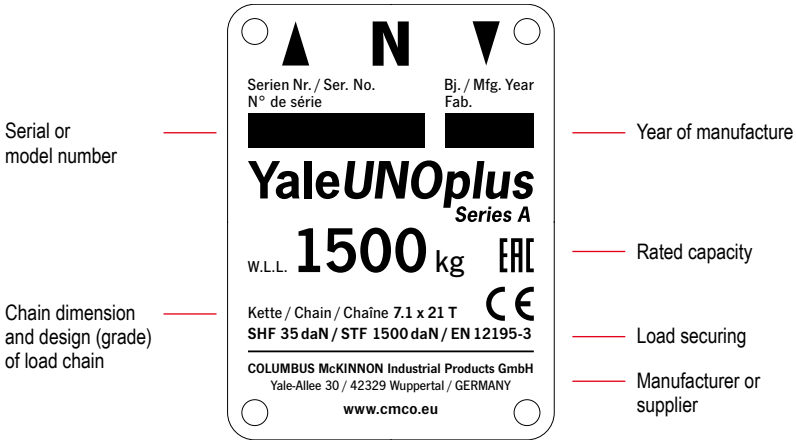

HOIST
yale

Maintenance and repair

- To ensure safe operation, all hoisting equipment must be subjected to regular inspections according to the maintenance instructions given by the manufacturer.
- Hoists which are due for maintenance (normally once per year, unless adverse working conditions dictate shorter periods) or products with obvious defects may be returned to us for inspection and repair.
- Inspections and tests must be performed by competent persons or specialist workshops that use original spare parts!

Inspections

- According to German laws and standards all hoisting equipment must be subjected to a mandatory inspection at least once a year. The inspection must be performed by a competent person.
- On building sites hoists have to be inspected every time before operation.
- Hoist and supporting components have to be cleaned prior to inspection. The cleaning procedure must not cause chemical damages (e.g. no acid-embrittlement). Do not expose the hoist and supporting components to unallowed temperatures by e.g. flame cleaning avoid concealment of cracks and excessive material loss (sand blasting).
  We shall be pleased to consult you in this respect. Please submit your hoists for inspection in clean condition. This will reduce inspection costs considerably!

Criteria for hoist disposal

Hoists must no longer be operated if e.g.:

- The identification (identity plate) is missing or illegible.
- Security relevant components like brake, slipping clutch, ratchet pawls etc. do not properly function any longer.
- Housing, control units and suspension of the hoist present obvious deficiencies, i.e.
  - cuts, grooves, cracks
  - excessive corrosion
  - staining due to heat
  - signs of subsequent welding resp. spatters which cannot be easily removed and leave stains
- Ropes show breakage of wires resp. bruises (criteria for disposal of ropes are given in classification DIN 15020), damages to the rope sleeve and similar failures.
- The load chain presents twisted or distorted links or shows an elongation of 5 % of one chain link or a reduction in diameter of more than 10 % (average of two measurings (longitudinal and transverse) compared to the nominal diameter).
- The opening (C) of suspension and/or load hooks is stretched by more than 10 % compared with the nominal dimension, or if the hook mouth shows a wear of more than 5 % of either dimension B or D.

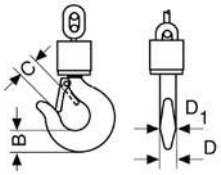

- Detrimental impacts by e.g. overloading, shock loading, chemical influences or heat have occurred, the hoist may only be returned to service after careful inspection and repair.

INFO

C 85
Ratchet lever hoist with roller chain

Capacity 750 - 3000 kg

D 85
Ratchet lever hoist with link chain

Capacity 750 - 10000 kg

Almost unlimited applications in maintenance, mining, construction, steel fabrication, shipbuilding and utility work. Ideal for moving and positioning heavy machines and securing heavy loads, simplifies setting pipes etc. in manholes and trenches.

Features

- Enclosed housing with housing cover, handlever and bottom block made from high tensile white malleable cast iron for overall rugged construction.
- Wet painting colour code RAL 1023.
- The graphite cast iron load sheave for the link chain has precision machined chain pockets for accurate fit and durability of the load chain.
- The roller chain sprocket is made from heat treated chromium-molybdenum steel with precision machined teeth to ensure smooth chain movement.
- Alloyed steel link chain with zinc-plated, in accordance with national and international standards and regulations.

We are pleased to send you our new Atex catalogue in PDF format.

INFO

Since 1936, the Velbert factory has built over 1 million units!

All ratchet lever hoists with a capacity exceeding 750 kg can be used for load attachment according to EN 12195.

Yale hoists and trolleys are not designed for passenger elevation applications and must not be used for this purpose.

Technical data C 85

Model	Art.-No.	Capacity kg	Number of chain falls	Chain dimensions p x b Zoll	Chain dimensions p x b mm	Lift with one full lever turn mm	Handle pull at WLL daN	Weight at standard lift (1.5 m) kg
PUL-LIFT C 85 750	N01141295	750	1	5/8" x 3/8"	15.875 x 9.65	115	38	8.7
PUL-LIFT C 85 1500	N01141296	1500	1	1" x 1/2"	25.4 x 12.7	45	31	17.0
PUL-LIFT C 85 3000	N01141297	3000	1	1 1/4" x 5/8"	31.75 x 15.875	36	40	22.2

Dimensions C 85

Model	PUL-LIFT C 85 750	PUL-LIFT C 85 1500	PUL-LIFT C 85 3000
A min., mm	322	389	403
B, mm	21	27	35
C, mm	27	30	34
D, mm	15	20	25
D1, mm	17	23	25
E, mm	443	443	570
F, mm	112	189	197
G, mm	56	134	142
H, mm	56	55	55
J, mm	142	171	179
K, mm	39	72	76
L, mm	103	99	103

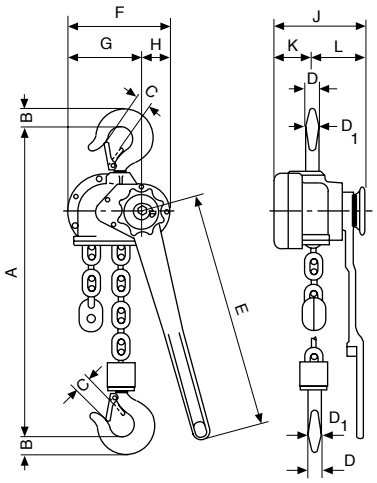

Technical data D 85

Model	Art.-No.	Capacity kg	Number of chain falls	Chain dimensions d x p in mm/ Version	Lift with one full lever turn mm	Handle pull at WLL daN	Weight at standard lift (1.5 m) kg
PUL-LIFT D 85 750	N01541291	750	1	6 x 18.5 - T	111	38	8.2
PUL-LIFT D 85 1500	N01541292	1500	1	9 x 27 - T	45	31	16.3
PUL-LIFT D 85 3000	N01541293	3000	1	11 x 31 - T	33	40	19.6
PUL-LIFT D 85 6000	N01541294	6000	2	11 x 31 - T	17	42	32.9
PUL-LIFT D 85 10000	N01541511	10000	3	11 x 31 - T	11	37	60.0

Dimensions D 85

Model	PUL-LIFT D 85 750	PUL-LIFT D 85 1500	PUL-LIFT D 85 3000	PUL-LIFT D 85 6000	PUL-LIFT D 85 10000
A min., mm	322	389	403	532	805
B, mm	21	27	35	48	61
C, mm	27	30	34	46	54
D, mm	15	20	25	40	40
D1, mm	17	23	25	40	45
E, mm	443	443	570	570	570
F, mm	112	189	197	197	305
G, mm	56	134	142	142	163
H, mm	56	55	55	55	142
J, mm	142	171	179	218	218
K, mm	39	72	76	76	76
L, mm	103	99	103	142	142

Yale*ERGO 360*®

Ratchet lever hoist

Capacity 750 - 9000 kg

Redefining lever-operated hoists, the Yale*ERGO 360*® features the revolutionary crank handle that allows for efficient operation in both lifting and pulling applications. Ergonomically designed for increased safety, the patented Yale*ERGO 360*® lets the operator work up to 12 times faster and with as much as 30 % less pull force than with conventional ratchet lever tools.

Features

- The lightweight, high-strength aluminium housing with powder coating and high-quality bearings offer a long service life even with intensive use and rough operating conditions.
- The hand lever with integrated snap crank ensures ideal power transmission and enables a 360° working range. This increases productivity and reduces the risk of injury.
- Display of the operating direction or free chaining in the viewing window of the hand lever.
- The covered load pressure brake remains free of dirt and moisture, which enables precise load positioning.
- Standard free chaining device to quickly attach the load or to pull the chain through the hoist in both directions.
- Chain guide and stripper are made of robust cast iron and zinc plated to protect against corrosion.
- Alloyed steel link chain with zinc-plated resp. yellow chromated finish, in accordance with national and international standards and regulations.
- Rotatable, forged top and load hooks and casted safety latches provide reliable and safe load suspension. The screwed top hook cross bars and bottom blocks are allowed for easy maintenance.

Optional

- All Yale*ERGO 360*® units can be equipped with an overload protection device in the form of a slip clutch which is factory preset to approx. 25 % ± 15 % overload.
- Shipyard hooks available for 1500 kg and 3000 kg units.

DESIGN AWARD 2018

PATENTED

HAND LEVER WITH RETRACTABLE CRANK

DESIGNED FOR OPTIMAL EFFICIENCY & SAFETY

Capacity
750 kg

Shortest hook space (Amin.) 320 mm

Handle pull at WLL crank lever handle operation 20 daN

Weight 6.7 kg

Capacity
1500 kg

Shortest hook space (Amin.) 375 mm

Handle pull at WLL crank lever handle operation 24 daN

Weight 9.6 kg

Capacity
3000 kg

Shortest hook space (Amin.) 445 mm

Handle pull at WLL crank lever handle operation 35 daN

Weight 17.2 kg

Capacity
6000 kg

Shortest hook space (Amin.) 563 mm

Handle pull at WLL crank lever handle operation 37 daN

Weight 28.9 kg

Capacity
9000 kg

Shortest hook space (Amin.) 695 mm

Handle pull at WLL crank lever handle operation 41 daN

Weight 49.5 kg

When folded out, the lever handle can serve as a carrying grip for easy transport. Simply attach the end stop to the hook and slip the hook onto the crank handle.

Unique body design allows the Yale*ERGO 360*® to lay flat to minimize tipping or slipping during operation.

The Yale*ERGO 360*® in conventional use.

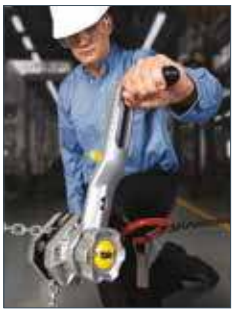

The Yale*ERGO 360*® in use of the extended crank handle.

DISTINCTIVE (((CLICKING SOUND)))

ENSURES THE HANDLE IS LOCKED INTO POSITION

To return handle to upright position, simply pull the handle outward and snap into place inside the lever.

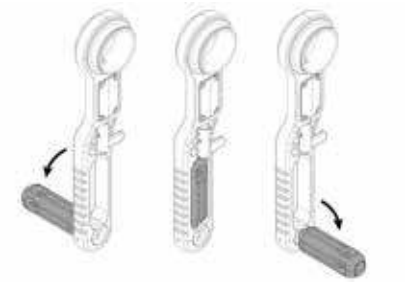

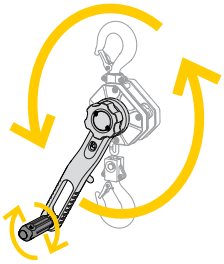

The hand lever with integrated crank

- 360° rotation increases efficiency, allowing operators to work up to 12 times faster than with a conventional ratchet lever hoist.
- Requires 30 % less pull force to operate.
- Easy and effective operation from any angle with handle that folds down and locks into position on either side of the lever.
- Design keeps the operator's body aligned with the load chain, reducing the risk of the twist effect – when a hoist twists around the chain.
  No need to use a second hand to stabilize the hoist.
- Operator can securely grip the grooved, no-slip handle.
- Crank handle made of durable polyamide with a heavy-duty steel core for rugged use.

SAFE & SECURE

SELECTOR LEVER LOCKS IN PLACE TO PREVENT ACCIDENTALLY SWITCHING.

Pull down on the selector lever to unlock it, turn it to the desired direction, and release it into the locking position.

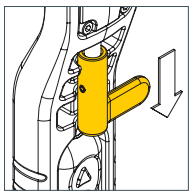

Convenient directional indicator

Easy-to-use, highly visible directional indicator window located in the handle clearly shows the operating direction as LIFTING (▲), LOWERING (▼) or NEUTRAL (**N**).

Simple & smooth free chaining device

Quick positioning of the unloaded chain - even with one-handed operation.

In this operating mode, the chain can be pulled through the unit by hand in both directions in order to attach it more quickly.

The free chaining device is activated by moving (shifting) the lever to the neutral position (**N**).

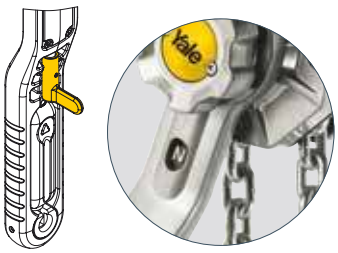

Technical data Yale*ERGO 360®*

Model	Art.-No.	Capacity kg	Number of chain falls	Chain dimensions d x p in mm/ design	Lift with one full lever turn mm	Handle pull at WLL daN	Handle pull at WLL with crank daN	Weight at standard lift (1.5 m) kg
Yale*ERGO 360* 750	192028204	750	1	5.6 x 17.1 - T	27.2	21	20	6.7
Yale*ERGO 360* 1500	192028202	1500	1	7.1 x 21 - T	21.7	31	24	9.6
Yale*ERGO 360* 3000	192028553	3000	1	10 x 28 - V	20.1	43	35	17.2
Yale*ERGO 360* 6000	192035451	6000	2	10 x 28 - V	10.1	46	37	28.9
Yale*ERGO 360* 9000	192039362	9000	3	10 x 28 - V	6.7	50	41	49.5

Dimensions Yale*ERGO 360®*

Model	Yale*ERGO 360* 750	Yale*ERGO 360* 1500	Yale*ERGO 360* 3000	Yale*ERGO 360* 6000	Yale*ERGO 360* 9000
A min., mm	320	375	445	563	695
B, mm	20	26	37	45	68
C, mm	27	31	40	47	68
D, mm	18	21	28	35	50
E, mm	327	327	377	377	377
F, mm	300	300	350	350	350
G, mm	40	51	57	71	116
H, mm	81	96	123	162	199
J, mm	121	147	180	233	315
K, mm	56	69	86	86	86
L, mm	105	110	121	121	121
M, mm	161	179	207	207	207
N, mm	30	30	30	30	30
O, mm	120	120	120	120	120
P, mm	257	273	299	299	299

Optional:

Shipyard hooks
for capacities 1500 and 3000 kg.

Based on a special design the shipyard hooks can be fixed to avoid slipping (resp. on steel plates which were braced for welding).

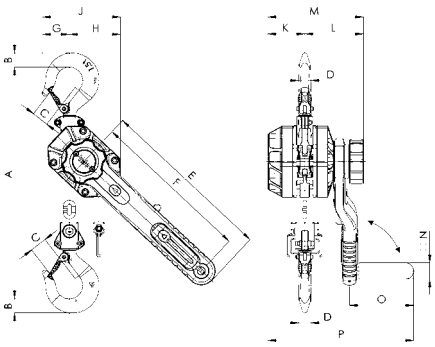

Yale*ERGO 360®*, 750 - 3000 kg, single fall

360°

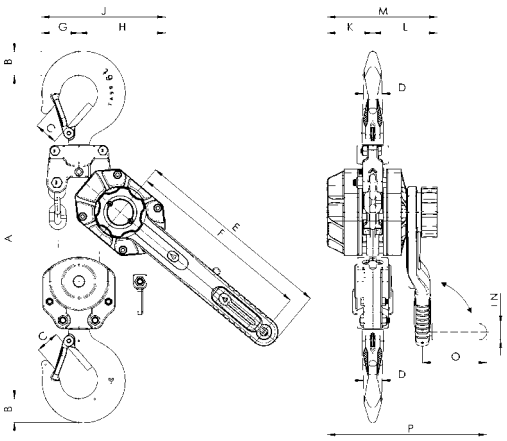

Yale*ERGO 360®*, 6000 kg, double fall

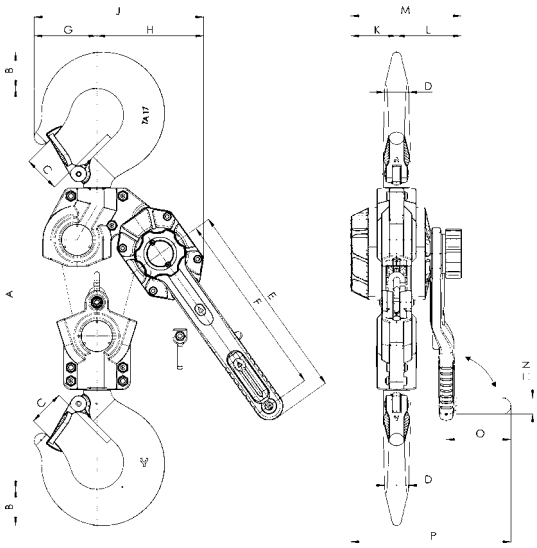

Yale*ERGO 360®*, 9000 kg, three fall

Yale*ERGO 360® UT*

Utility!

Ratchet lever hoist with safety gear

Capacity 1500 - 9000 kg

The Yale*ERGO 360® UT* is now also redefining the world of hoists for overhead line construction. The automatically acting safety gear, with a pending patent, once more increases the safety of use.
Here, too, the ergonomic and safety enhancing design of the device and the revolutionary, patented hand lever enable efficient work at any angle, for lifting and pulling applications.

Features

AUTOMATICALLY ACTING SAFETY GEAR

The Yale*ERGO 360® UT* has a unique, automatically locking safety device to prevent a sudden drop (patent pending). It guarantees permanent monitoring and is active during operation as well as during inactive moments without the user having to activate it.
In case of emergency, i.e. after failure of the load pressure brake and consequently exceeding the specified speed, the safety gear will automatically activate.
It safely absorbs the load, preventing the creation of larger dynamic forces which could cause further damage. Due to its design, the device remains in a safe state even in the event of an error (e.g. rusted ratchet pawl, broken springs or other influences such as basic corrosion or dirt).

EXCELLENT CORROSION PROTECTION

A housing optimized for outdoor applications (incl. water drainage holes on all sides) prevents a build up of water and the influence of moisture in extreme conditions (e.g. rain, fluctuations in temperature). External components such as the chain guide and the stripper are zinc plated. Some of the internal moving parts such as the drive pinion, the ratchet pawl, the load chain wheel and the ratchet are MKS coated (zinc flake coating).

Optional

CHAIN STOP & CHAIN CLAW*

Optionally, the devices can be equipped with our proven and tested YKST chain stop or the KKL chain claw.

*The usage is based on each country's specific regulations.

DGUV Test

HM 230021
Sicherheit geprüft
tested safety

dguv.de/pruefzeichen

PATENTED

AUTOMATICALLY ACTING SAFETY GEAR

DESIGNED FOR OPTIMAL EFFICIENCY & SAFETY

In accordance with EN 1808 -
Safety requirements for suspended access equipment, 8.9.2

In cooperation with BGHM Berufsgenossenschaft Holz und Metall and BG ETEM Energie Textil Elektro Medienerzeugnisse

Extract from BG ETEM statement:

"This is to confirm that the integrated safety gear in the ratchet lever hoist Yale*ERGO 360® UT* makes organizational measures such as the parallel use of several devices, the additional insertion of slings or the use and repositioning of an additional chain stopper obsolete.

In accordance with the S-T-O-P principle, the additional safety gear represents a technical solution that is superior to the organizational solutions used to date."

YaleERGO 360® UT *Utility!*

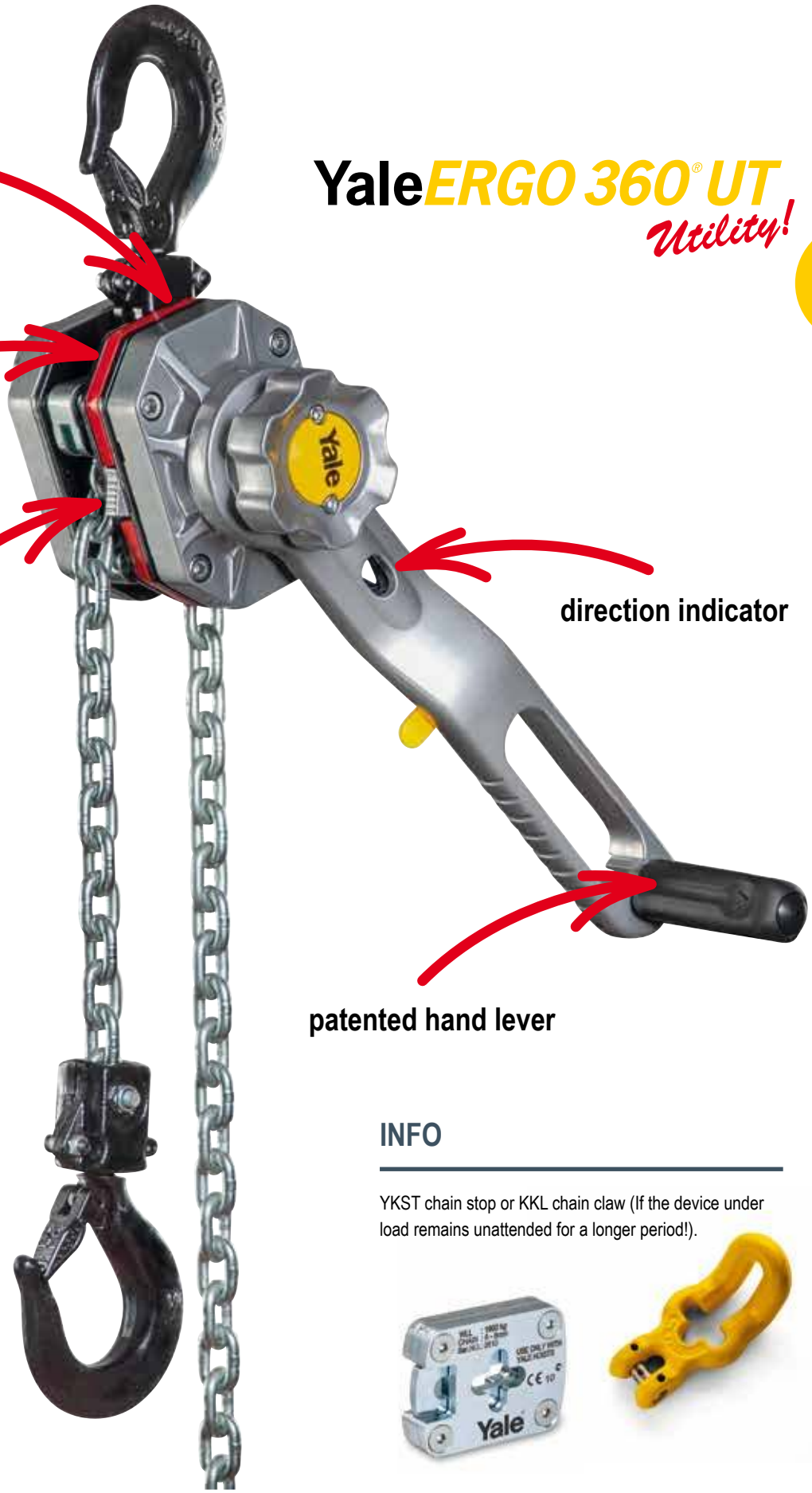

drain holes on all sides of the housing prevent standing water and moisture

automatically acting safety gear

push button to fully reset the safety gear

direction indicator

patented hand lever

INFO

YKST chain stop or KKL chain claw (If the device under load remains unattended for a longer period!).

STRUCTURE & FUNCTIONALITY OF THE AUTOMATIC SAFETY GEAR

PATENTED

AUTOMATICALLY ACTING SAFETY GEAR

DESIGNED FOR OPTIMAL EFFICIENCY & SAFETY

In accordance with EN 1808 -
Safety requirements for suspended access equipment, 8.9.2

REQUIREMENTS FOR THE REDUNDANT SAFETY GEAR in accordance with EN 1808 - Safety requirements for suspended access equipment, 8.9.2

- shall automatically engage in the event of overspeed (more than 0.5 m/s)
- the stopping distance must not exceed 500 mm
- shall be capable of being reset
- shall be capable of being tested
- shall permit lifting at any time

FUNCTION NORMAL OPERATION

Speed < 0.5 m/s

The rocker pawl moves continuously along the contours of the cam disc and lock disc.

FUNCTION ABSORPTION

Speed > 0.5 m/s

As soon as the speed exceeds 0.5 m/s, the rocker pawl engages the lock disc and safely absorbs the load.

INFO

In any cases the load is caught exceeding a speed of 0.5 m/s.

Speeds below 0.5 m/s (corresponds to 2 km/h) are not safety relevant according to EN 1808.

Extensive corrosion protection measures of the individual components ensure the proper functioning of the safety gear even during long-term use under poor weather conditions.

Overhead line construction

Aerial construction

Technical data Yale*ERGO 360® UT*

Model	Art.-No.	Capacity kg	Number of chain falls	Chain dimensions d x p in mm/ design	Lift with one full lever turn mm	Handle pull at WLL daN	Handle pull at WLL with crank daN	Weight at standard lift (1.5 m) kg
Yale*ERGO 360 UT* 1500	192069625	1500	1	7.1 x 21 - T	21.7	31	24	9.8
Yale*ERGO 360 UT* 3000	192069671	3000	1	10 x 28 - V	20.1	43	35	18.1
Yale*ERGO 360 UT* 6000	192071416	6000	2	10 x 28 - V	10.1	46	37	29.8
Yale*ERGO 360 UT* 9000	192083321	9000	3	10 x 28 - V	6.7	50	41	50.4

Dimensions Yale*ERGO 360® UT*

Model	Yale*ERGO 360 UT* 1500	Yale*ERGO 360 UT* 3000	Yale*ERGO 360 UT* 6000	Yale*ERGO 360 UT* 9000
A min., mm	375	445	563	695
B, mm	26	37	45	68
C, mm	31	40	47	68
D, mm	21	28	35	50
E, mm	327	377	377	377
F, mm	300	350	350	350
G, mm	51	57	71	116
H, mm	96	123	162	199
J, mm	147	180	233	315
K, mm	69	86	86	86
L, mm	124	136	136	136
M, mm	193	222	222	222
N mm	30	30	30	30
O, mm	120	120	120	120
P, mm	287	314	314	314

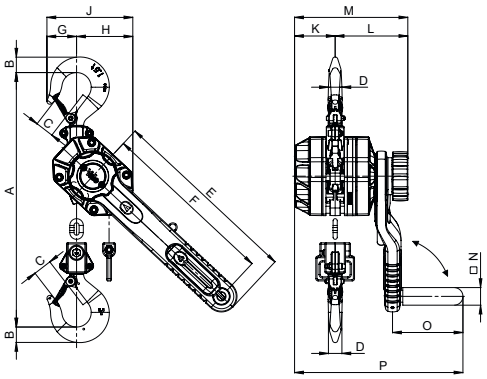

Yale*ERGO 360® UT*, 1500 - 3000 kg, single fall

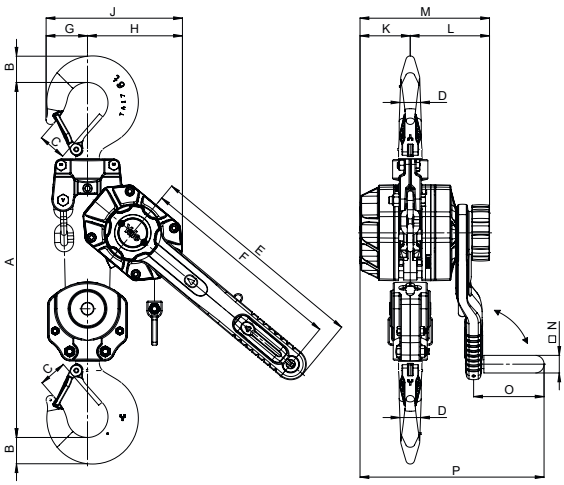

Yale*ERGO 360® UT*, 6000 kg, double fall

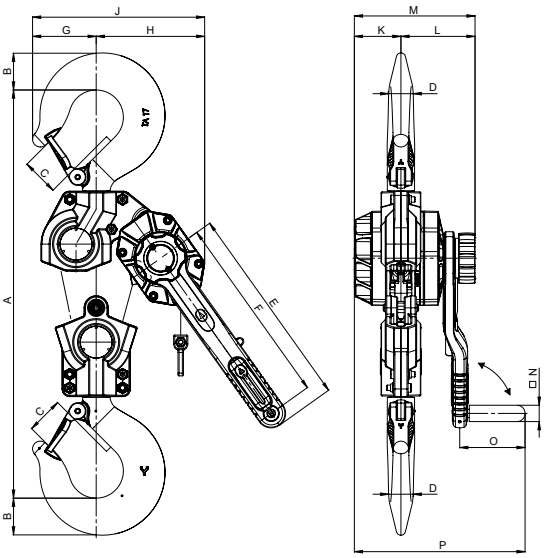

Yale*ERGO 360® UT*, 9000 kg, three fall

Construction of contact lines

Cable car construction

Positioning of loads

AL Ratchet lever hoist

Capacity 750 - 3000 kg

Its low own weight is an advantage. When the hoist has to be frequently carried over longer distances to different assignments. This universal ratchet hoist should not be missing in any service truck.

Features

- The enclosed housing, hand lever and hand wheel are made from high quality aluminium.
- Low effort on hand lever.
- Due to precise needle bearings the hoist can be operated with little effort.
- Standard free chaining device to quickly attach the load or to pull the chain through the hoist in both directions.
- The chain guide is cast into the body to ensure fault-less chain movement.
- Alloyed steel link chain with zinc-plated resp. yellow chromated finish, in accordance with national and international standards and regulations.

INFO

All ratchet lever hoists with a capacity exceeding 750 kg can be used for load attachment according to EN 12195.

Yale hoists and trolleys are not designed for passenger elevation applications and must not be used for this purpose.

Technical data AL

Model	Art.-No.	Capacity kg	Number of chain falls	Chain dimensions d x p in mm/ design	Lift with one full lever turn mm	Handle pull at WLL daN	Weight at standard lift (1.5 m) kg
AL 750	N02041251	750	1	6.3 x 19.1 - T	30	20	6.4
AL 1000	N02041252	1000	1	6.3 x 19.1 - T	30	22	6.6
AL 1500	N02041253	1500	1	7.1 x 21.2 - T	16	21	10.0
AL 3000	N02041254	3000	1	10 x 30.2 - T	14	28	18.0

Dimensions AL

Model	AL 750	AL 1000	AL 1500	AL 3000
A min., mm	315	325	380	455
B, mm	20	23	27	36
C, mm	22	23	26	33
D, mm	14	16	20	24
E, mm	300	300	300	400
F, mm	106	109	138	168
G, mm	47	47	60	75
H, mm	59	62	78	93
J, mm	154	154	177	212
K, mm	49	49	74	94
L, mm	105	105	103	118

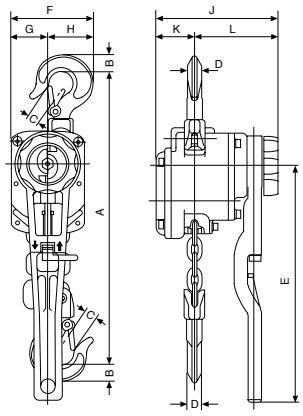

Yale*UNOplus* *Series A*

Ratchet lever hoist

Capacity 750 - 6000 kg

The *UNOplus - Series A* ratchet lever hoist is the result of further technical development of the *UNOplus*, which has proven itself over many years.
The versatile tool for lifting, pulling and securing of loads is characterised by its compact design, robust stamped steel construction and the smoothly running free chaining device. The further reduced weight optimizes operation, makes the application even more comfortable and the UNOplus - Series A to a convenient, versatile device.

Features

- Due to optimized gearing and improved bearings in the housing cover a minimum effort is required to operate the short hand lever.
- Automatic screw-and-disc type load brake with corrosion protected components.
- Standard free chaining device to quickly attach the load or to pull the chain through the hoist in both directions.
- Robust chain guide rollers eliminate fouling and jamming of chain on the load sheave.
- Robust chain end stop
- Comfortable rubber grip provides for extra protection against slippage.
- Alloyed steel link chain with zinc-plated resp. yellow chromated finish, in accordance with national and international standards and regulations.
- Forged suspension and load hooks are made from non-aging, high tensile steel and fitted with robust safety latches.

COMPACT & TRANSPORTABLE

UNIVERSALLY USABLE & USER FRIENDLY

LIGHTWEIGHT & CAN BE USED IN THE SMALLEST AREAS.

INFO

All ratchet lever hoists with a capacity exceeding 750 kg can be used for load attachment according to EN 12195.

Yale hoists and trolleys are not designed for passenger elevation applications and must not be used for this purpose.

We are pleased to send you our new Atex catalogue in PDF format.

Technical data *UNOplus-A*

Model	Art.-No.	Capacity kg	Number of chain falls	Chain dimensions d x p in mm/ design	Lift with one full lever turn mm	Handle pull at WLL daN	Weight at standard lift (1.5 m) kg
***UNOplus-A* 750**	192049841	750	1	5.6 x 17.1 - T	27	22	6.3
***UNOplus-A* 1500**	192049940	1500	1	7.1 x 21 - T	22	35	9.2
***UNOplus-A* 3000**	192050025	3000	1	10 x 28 - V	20	40	16.9
***UNOplus-A* 6000**	192050579	6000	2	10 x 28 - V	10	43	28.6

Dimensions *UNOplus-A*

Model	***UNOplus-A* 750**	***UNOplus-A* 1500**	***UNOplus-A* 3000**	***UNOplus-A* 6000**
A min., mm	312	375	445	563
B, mm	20	26	37	45
C, mm	27	31	40	47
D, mm	18	21	28	35
E, mm	267	267	376	376
F, mm	121	146	180	232
G, mm	40	51	57	71
H, mm	81	95	123	161
J, mm	144	164	193	193
K, mm	53	68	83	83
L, mm	91	96	110	110

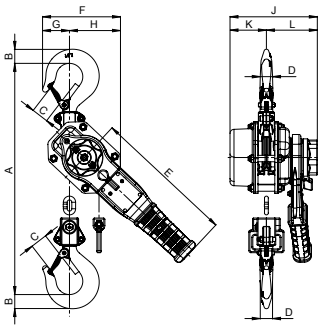

UNOplus-A, 750 - 3000 kg, single fall

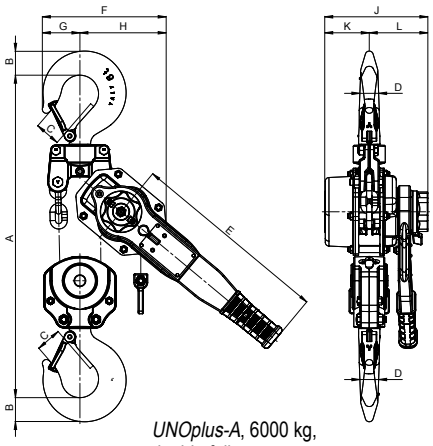

UNOplus-A, 6000 kg, double fall

Yale*UNOplus*

ARCTIC EDITION ***Series A***

Ratchet lever hoist

Capacity 750 - 6000 kg

With the Yale *ARCTIC EDITION* the field of application of the tried and tested Yalelift 360 manual hand chain hoist can now be expanded to applications under extreme low temperatures.

Care was taken to ensure that all functions, especially its innovative 360° hand chain guide, function optimally and safely even under extreme temperatures. The materials and lubricants used were adapted to the requirements and tested and certified in complex low-temperature test procedures.

This allows the user to work safely and productively with the Yalelift 360 even at temperatures down to -40°C, whereas standard hoists without these measures may only be used down to -20°C (DIN EN13157 Cranes - Safety - hand-operated cranes).

In addition to static tests, dynamic low-temperature tests were also carried out to rule out malfunctions and material failure.

We can confirm the user's suitability with a certificate.

INFO

Standard hoists according to EN13157
(cranes - safety - hand operated cranes)

5.1.12 Temperature
Hand chain blocks and their components shall be capable of operating within an ambient temperature range of -10°C to +50°C unless another temperature range is agreed between the manufacturer and the purchaser. Standard hoist products from CMCO are suitable for a temperature range of -20°C to +50°C!

Technical data *UNOplus-A ARCTIC EDITION*

Model	Art.-No.	Capacity kg	Number of chain falls	Chain dimensions d x p in mm/ design	Lift with one full lever turn mm	Handle pull at WLL daN	Weight at standard lift (1.5 m) kg
UNOplus-A* 750 *ARCTIC EDITION	192099226	750	1	5.6 x 17.1 - T	27	22	6.3
UNOplus-A* 1500 *ARCTIC EDITION	192099227	1500	1	7.1 x 21 - T	22	35	9.2
UNOplus-A* 3000 *ARCTIC EDITION	192099228	3000	1	10 x 28 - V	20	40	16.9
UNOplus-A* 6000 *ARCTIC EDITION	192099229	6000	2	10 x 28 - V	10	43	28.6

Dimensions *UNOplus-A ARCTIC EDITION*

Model	*UNOplus-A* 750 *ARCTIC EDITION*	*UNOplus-A* 1500 *ARCTIC EDITION*	*UNOplus-A* 3000 *ARCTIC EDITION*	*UNOplus-A* 6000 *ARCTIC EDITION*
A min., mm	312	375	445	563
B, mm	20	26	37	45
C, mm	27	31	40	47
D, mm	18	21	28	35
E, mm	267	267	376	376
F, mm	121	146	180	232
G, mm	40	51	57	71
H, mm	81	95	123	161
J, mm	144	164	193	193
K, mm	53	68	83	83
L, mm	91	96	110	110

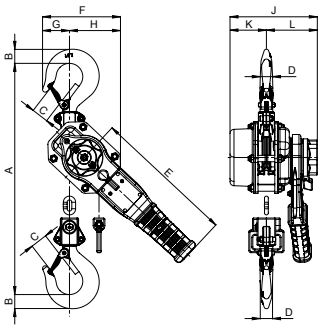

UNOplus-A ARCTIC EDITION,
750 - 3000 kg, single fall

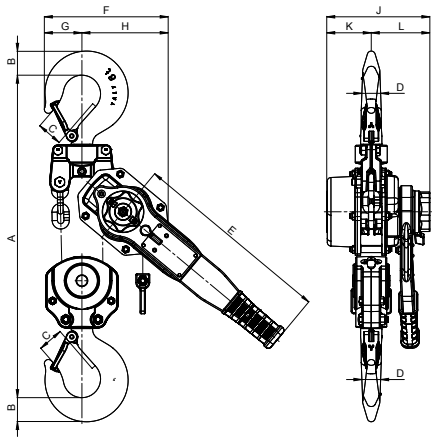

UNOplus-A ARCTIC EDITION,
6000 kg, double fall

COMPACT & TRANSPORTABLE

UNIVERSALLY USABLE & USER FRIENDLY

LIGHTWEIGHT & CAN BE USED IN THE SMALLEST AREAS.

Yale*handy*

Ratchet lever hoist

Capacity 250 - 500 kg

The extreme low own weight and the very compact design make the hoist easy to use even in confined working conditions. Due to the multitude of application possibilities e.g. in industry, trade and service this ratchet lever hoist is indispensable.

Features

- The enclosed design protects the internal parts from contamination.
- The short handlever is fitted with an ergonomic rubber grip.
- All parts of the disc type load brake are manufactured from high quality materials and are corrosion protected.
- Standard free chaining device to quickly attach the load or to pull the chain through the hoist in both directions.
- Alloyed steel link chain with zinc-plated resp. yellow chromated finish, in accordance with national and international standards and regulations.
- Forged suspension and load hooks are made from non-aging, high tensile steel and fitted with robust safety latches.

INFO

Yale hoists and trolleys are not designed for passenger elevation applications and must not be used for this purpose.

Technical data Yalehandy

Model	Art.-No.	Capacity kg	Number of chain falls	Chain dimensions d x p in mm/ design	Lift with one full lever turn mm	Handle pull at WLL daN	Weight at standard lift (1.5 m) kg
Yalehandy 250	N02300018	250	1	4 x 12 - T	80	25	2.2
Yalehandy 500	N02300070	500	1	4 x 12 - V	40	25	2.8

Dimensions Yalehandy

Model	Yalehandy 250	Yalehandy 500
A min., mm	240	282
B, mm	20	17
C, mm	21	24
D, mm	14	12
E, mm	160	160
F, mm	72	104
G, mm	33	38
H, mm	39	66
J, mm	98	116
K, mm	21	36
L, mm	77	80

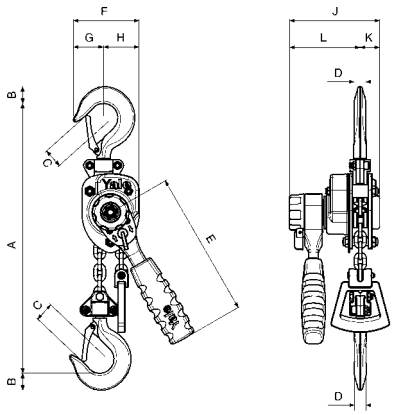

Silverline HZ S
Ratchet lever hoist

Capacity 750 - 6000 kg

The Silverline HZ S is designed and built for safe and efficient operation.
A hoist with low maintenance - at an economical price.

Features

- Strong bolts between side plates and housing cover ensure increased stability.
- Chain guide rollers eliminate fouling and jamming of chain.
- Bearings for side plates permit a long service life.
- Zinc-plated load chain as standard.
- Forged suspension and load hooks are made from high tensile steel and fitted with safety latches.

INFO

All ratchet lever hoists with a capacity exceeding 750 kg can be used for load attachment according to EN 12195.

Yale hoists and trolleys are not designed for passenger elevation applications and must not be used for this purpose.

Technical data Silverline HZ S

Model	Art.-No.	Capacity kg	Number of chain falls	Chain dimensions d x p in mm/ design	Lift with one full lever turn mm	Handle pull at WLL daN	Weight at standard lift (1.5 m) kg
HZ S 750	N02300113	750	1	6 x 18 - T	20	20	7.0
HZ S 1500	N02300114	1500	1	8 x 24 - T	10	36	10.0
HZ S 3000	N02300115	3000	1	10 x 30 - T	17	38	18.0
HZ S 6000	N02300116	6000	2	10 x 30 - T	9	39	27.0

Dimensions Silverline HZ S

Model	HZ S 750	HZ S 1500	HZ S 3000	HZ S 6000
A min., mm	330	410	490	640
B, mm	24	30	45	55
C, mm	26	31	34	46
D, mm	14	18	26	37
E, mm	280	410	410	410
F, mm	111	175	190	240
G, mm	33	50	60	80
H, mm	78	125	130	160
J, mm	142	180	195	200
K, mm	55	75	85	90
L, mm	87	105	110	110

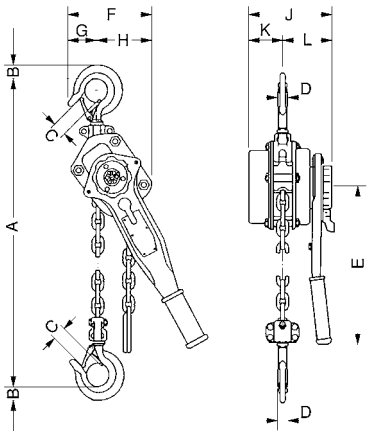

Silverline Stira S
Hand chain hoist

Capacity 500 - 5000 kg

The hand chain run is just as smooth as on the models Yale*lift 360* and VS*III*, but the Silverline Stira S series is a low-priced alternative to the high-quality units.

Features

- Strong bolts between side plates and housing cover ensure increased stability.
- Chain guide rollers eliminate fouling and jamming of chain.
- The design prevents the hand chain from jamming and jumping off.
- Bearings for side plates permit a long service life.
- Zinc-plated load chain as standard.
- Forged suspension and load hooks are made from high tensile steel and fitted with safety latches.

INFO

Yale hoists and trolleys are not designed for passenger elevation applications and must not be used for this purpose.

Technical data Silverline Stira S

Model	Art.-No.	Capacity kg	Number of chain falls	Chain dimensions d x p in mm/ design	Lift per 1 m hand chain overhaul mm	Handle pull at WLL daN	Weight at standard lift (3 m) kg
Stira S 500	N04500041	500	1	6 x 18 - T	29	23	12.0
Stira S 1000	N04500042	1000	1	6 x 18 - T	27	31	14.0
Stira S 1500	N04500043	1500	1	8 x 24 - T	20	32	19.0
Stira S 2000	N04500044	2000	1	8 x 24 - T	15	36	21.0
Stira S 3000	N04500045	3000	2	8 x 24 - T	5	34	27.0
Stira S 5000	N04500046	5000	2	10 x 30 - T	3	41	43.0

Dimensions Silverline Stira S

Model	Stira S 500	Stira S 1000	Stira S 1500	Stira S 2000	Stira S 3000	Stira S 5000
A min.	270	317	399	414	465	636
B	18	23	28	28	35	46
C	30	34	38	41	48	52
D	13	16	20	23	27	35
E	127	158	174	187	199	253
F	131	140	161	161	161	186
G	74	77	82	84	82	93
H	57	63	79	77	79	91
K	220	250	280	300	310	400

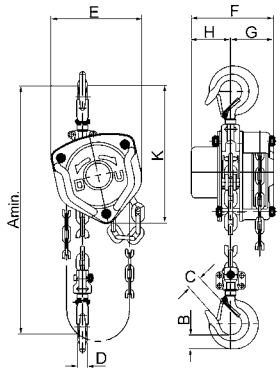

Silverline Stira S
500 - 2000 kg, single fall

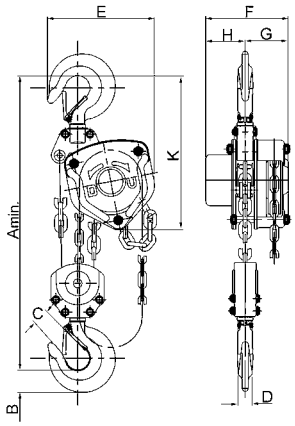

Silverline Stira S
3000 - 5000 kg, double fall

Yale *VS III*

Hand chain hoist

Capacity 250 - 5000 kg

Extremely low overall height allows optimal use of available headroom. Fully enclosed stamped steel housing allows also outdoor use. The improved hand chain guide prevents canting or jamming of the hand chain, leading to a smooth running of the chain. High quality bearings on side plates, gearbox and load chain sheave ensure smooth operation of load chain and drive pinion. Optimized hand forces set standards for easy operation. The hooks are equipped with robust safety latches and can rotate 360°.

Features

- Strong bolts between side plates and housing cover and the reinforced hand wheel cover ensure increased stability.
- Precision machined guide rollers ensure smooth running of the load chain.
- High quality bearings for gearbox, side plates and load chain sheave permit a long service life.
- Zinc-plated and yellow-chromated brake parts and guide rollers ensure increased corrosion protection.
- Zinc-plated load chain as standard for added corrosion protection.

Optional

- Overload protection device (from 500 kg available)
- Chain container

Load chain sheave with needle bearing

Side plate with ball bearing

Housing cover with ball bearing

Yale *VS III*

Hand chain hoist

Capacity 10000 - 50000 kg

Having long years of experience with this solid product, we decided to extend the VS*III* series by the load capacities 10 t, 20 t, 30 t and 50 t.

In order to serve all industries (even the paper- or the ship industry), the VSIII lifts the loads very sensitively, as the components and construction parts have been positioned very precisely.

Features

- Strong bolts between side plates and housing cover and the reinforced hand wheel cover ensure increased stability.
- Precision machined guide rollers ensure smooth running of the load chain.
- High quality bearings for gearbox, side plates and load chain sheave permit a long service life.
- Zinc-plated and yellow-chromated brake parts and guide rollers ensure increased corrosion protection.
- Zinc-plated load chain as standard for added corrosion protection.

Optional

- Overload protection device
- Chain container on request

SERIES EXTENSION

NOW WITH HIGH SWL!

30000 - 50000 kg

INFO

To avoid bruising or injuries, the chain inlet as well as the top hook connection is covered in protective material.

Technical data VS*III*

Model	Art.-No.	Capacity in kg/ Number of chain falls	Chain dimensions d x p in mm/ design	Lift per 1 m hand chain overhaul mm	Handle pull at WLL daN	Weight at standard lift (3 m) kg
VS*III* 0,25/1	N04200123	250/1	4 x 12 - T	50	20	4.9
VS*III* 0,5/1	N04200124	500/1	5 x 15 - T	26	21	9.0
VS*III* 1,0/1	N04200125	1000/1	6 x 18 - T	24	24	11.5
VS*III* 1,5/1	N04200134	1500/1	8 x 24 - T	17	30	17.5
VS*III* 2,0/1	N04200126	2000/1	8 x 24 - T	19	32	19.0
VS*III* 2,0/2	N04200127	2000/2	6 x 18 - T	15	29	17.3
VS*III* 3,0/1	N04200128	3000/1	10 x 30 - T	12	40	31.0
VS*III* 3,0/2	N04200129	3000/2	8 x 24 - T	10	37	27.0
VS*III* 5,0/2	N04200130	5000/2	10 x 30 - T	8	41	43.0
VS*III* 10/4	192039383	10000/4	10 x 30 - T	2.84	37	78.5
VS*III* 20/8	192039384	20000/8	10 x 30 - T	1.42	44.5	197
VS*III* 30/12	192039385	30000/12	10 x 30 - T	0.83	46.3	268
VS*III* 50/18	192039386	50000/18	10 x 30 - T	0.56	53.6	540

Dimensions VS*III*

Model	VS*III* 0,25/1	VS*III* 0,5/1	VS*III* 1,0/1	VS*III* 1,5/1	VS*III* 2,0/1	VS*III* 2,0/2	VS*III* 3,0/1	VS*III* 3,0/2	VS*III* 5,0/2	VS*III* 10/4	VS*III* 20/8	VS*III* 30/12	VS*III* 50/18
A min., mm	290	350	380	450	460	490	570	580	700	860	950	1112	1700
B, mm	12	21	27	33	37	37	46	46	56	63	90	90	165
C, mm	26	28	32	37	41	41	44	44	50	65	86	85	135
D, mm	11	16	19	22	27	27	31	31	37	47	69	67	108
E, mm	118	145	158	180	205	170	240	220	250	463	860	704	776
F, mm	113	140	155	175	180	155	210	175	190	104	200	410	627
G, mm	65	80	87	85	94	87	110	94	95	55	100	225	314
H, mm	48	60	68	90	86	68	100	81	95	50	100	186	314
K, mm	190	240	270	300	320	285	370	340	410	448	508	528	656

INFO

Yale hoists and trolleys are not designed for passenger elevation applications and must not be used for this purpose.

Optional: Chain container

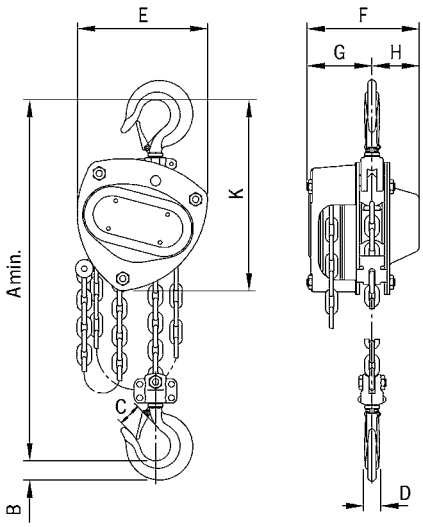

VS*III*, 250 - 3000 kg, single fall

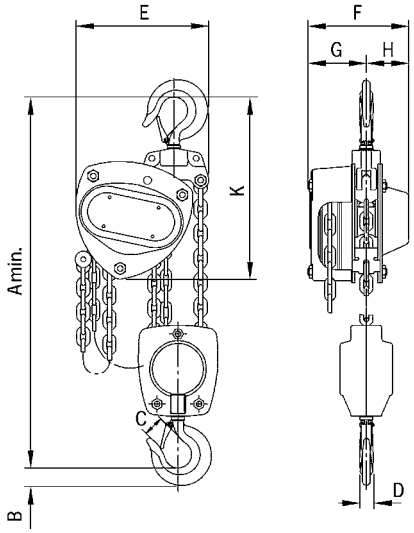

VS*III*, 2000 - 5000 kg, double fall

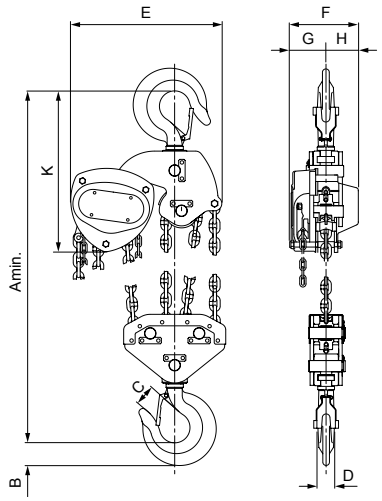

VS*III*, 10000 kg, four chain falls

INFO

HTG trolleys for hand chain hoists upwards 10000 kg please see pages 54 - 57.

SERIES EXTENSION

NOW WITH HIGH SWL!

30000 - 50000 kg

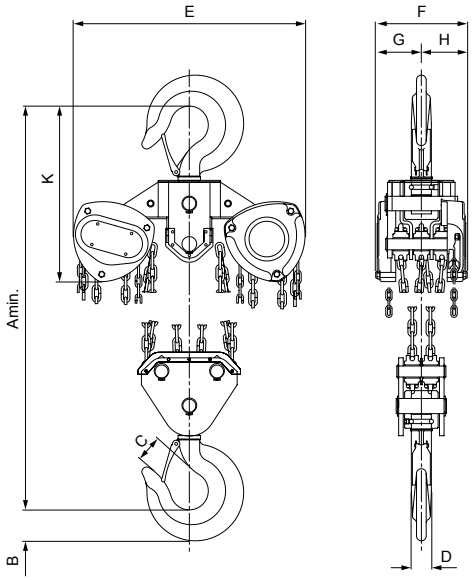

VS*III*, 20000 kg, eight chain falls

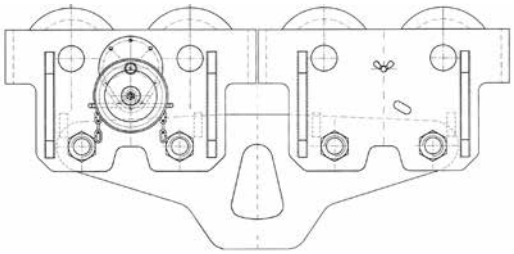

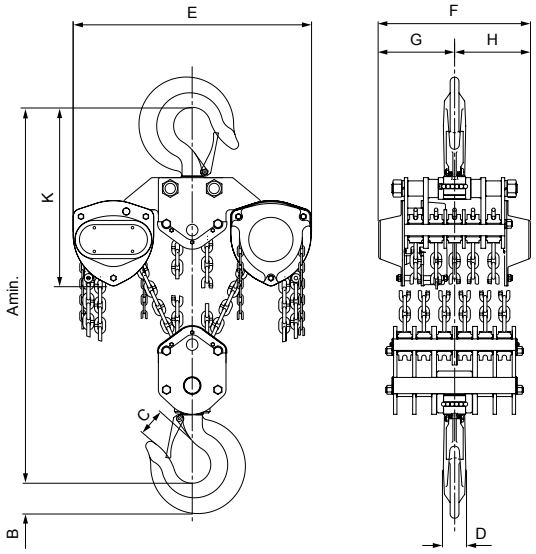

VS*III*, 30000 kg, twelve chain falls

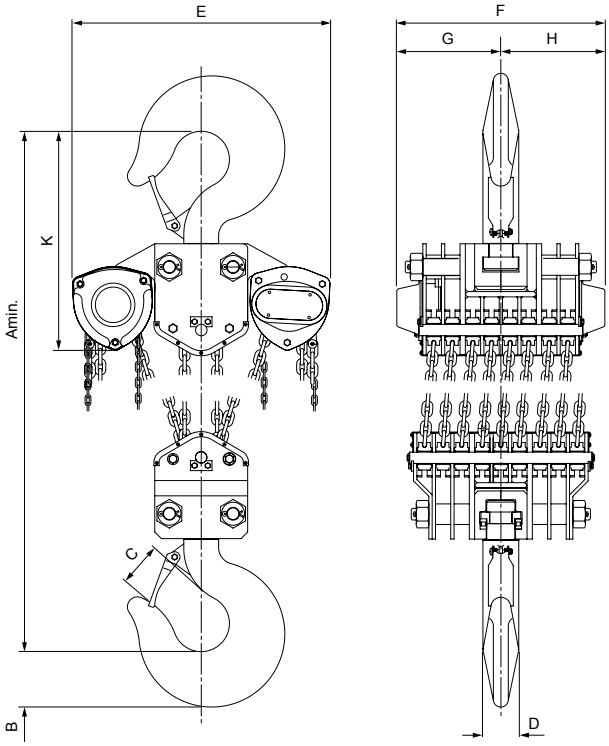

VS*III*, 50000 kg, eighteen chain falls

DESIGN AWARD 2003

Rotating hand chain guide!

360°

EXPERIENCE THE
ADVANTAGE OF 360°

We are pleased to send you our new Atex catalogue in PDF format.

INFO

Easy modification from Yalelift 360 to Yalelift IT is possible.

Yale*lift 360*

Hand chain hoist

Capacity 500 - 10000 kg

Areas of operation as well as operator conditions have been improved far beyond those of a classical hand chain hoist.

Features

- The enclosed robust stamped steel housing protects all internal components even in the toughest conditions.
- The extremely low headroom allows maximum use of the lifting height.
- The revolutionary 360° rotating hand chain guide allows the operator to work from virtually any position, in confined spaces or above the load. The Yalelift can even be operated from the side of the load which also makes it possible to use the hoist for horizontal pulling or tensioning. Due to the additional flexibility, the operator is no longer forced to work in the danger zone near the load.
- The brake system is extremely quiet and guarantees operational safety and improved serviceability due to omission of the vulnerable ratchet pawls. All parts are made of high quality materials, additionally zinc-plated or yellow-chromated to increase corrosion prevention.
- Chain guide and gearbox are almost totally enclosed. Even under the toughest conditions the internal gearbox remains protected.
- The hardened load sheave with four precision machined pockets ensures accurate movement of the load chain.
- The surface protected zinc-plated alloy steel load chains fulfil all requirements of current national and international standards and regulations. They are optimally matched to the load sprocket and ensure safe and long-lasting operation of the unit.
- Forged load and suspension hooks that yield under overoad instead of breaking, are made of high tensile steel. The hooks are fitted with robust safety latches and rotate 360°.

Optional

- Adjustable overload protection device.
- Chain container
- Corrosion resistant version.

Yale*lift 360*

Hand chain hoist, 20 t

Capacity 20000 kg

In spite of its high capacity, the Yale*lift 360* 20 t features a compact design.

Features

- All components are made of high quality materials, some components are zinc-plated or yellow-chromated for added corrosion protection. This ensures that also heaviest loads are held reliably.
- The enclosed robust stamped steel body resists in the toughest conditions and allows outside operation.
- The hardened load sheave with five precision machined pockets ensures accurate movement of the load chain.
- The low headroom (hook-to-hook dimension 1065 mm) allows maximum use of the lifting height.
- The Yale*lift 360* 20 t is equipped with six chain falls only which results in higher speed and lower weight.

Optional

- Adjustable overload protection device.
- Chain container
- Corrosion resistant version.

The robust stamped steel housing with four stay bolts is resistant to the toughest working conditions.

Chain guide

UPGRADE

SIMPLE & FLEXIBLE

FROM Yale*lift 360* TO Yale*lift* IT

Technical data Yale*lift 360*

Model	Art-No.	Capacity kg	Number of chain falls	Chain dimensions d x p in mm/ design	Lift per 1 m hand chain overhaul mm	Handle pull at WLL daN	Weight at standard lift (3 m) kg
YL 500	N04700109	500	1	5 x 15 - T	33	21	9
YL 1000	N04700110	1000	1	6 x 18 - T	20	30	13
YL 2000	N04700111	2000	1	8 x 24 - T	14	32	21
YL 3000	N04700112	3000	1	10 x 30 - V	12	38	34
YL 5000	N04700113	5000	2	10 x 30 - T	6	34	48
YL 10000	N04700075	10000	3	10 x 30 - V	4	44	71
YL 20000	N04700077	20000	6	10 x 30 - V	2	2 x 44	196

Dimensions Yale*lift 360*

Model	YL 500	YL 1000	YL 2000	YL 3000	YL 5000	YL 10000	YL 20000
A min., mm	300	335	395	520	654	825	1.065
B, mm	17	22	30	38	45	68	85
C, mm	24	29	35	40	47	68	64
D, mm	133	156	182	220	220	220	303
E, mm	148	175	203	250	250	383	555
F, mm	148	167	194	219	219	219	250
G, mm	139	164	192	225	242	326	391
H, mm	206	242	283	335	352	436	501
I, mm	24	24	31	34	21	136	–
K, mm	61	70	83	95	95	95	396
L, mm	87	97	111	124	124	124	125
M, mm	110	125	156	178	285	401	471
N, mm	14	19	22	30	37	50	56

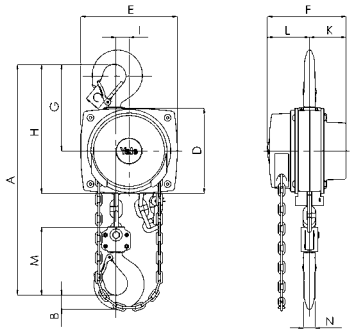

Yale*lift 360*, 500 - 3000 kg, single fall

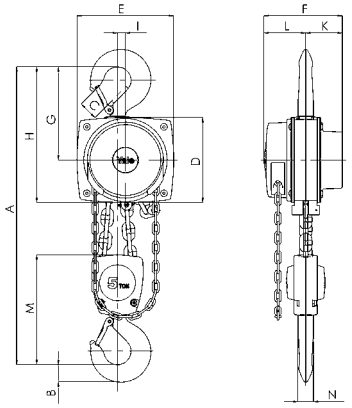

Yale*lift 360*, 5000 kg, double fall

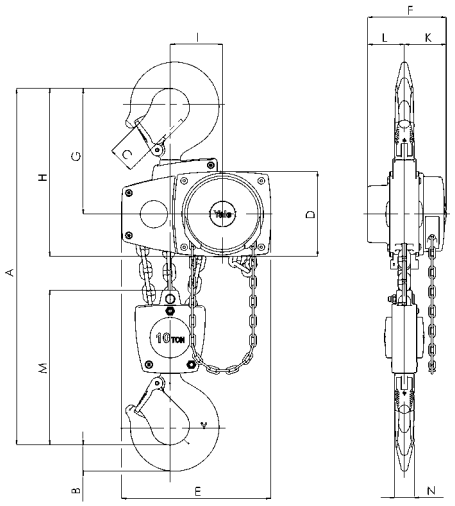

Yale*lift 360*, 10000 kg, three falls

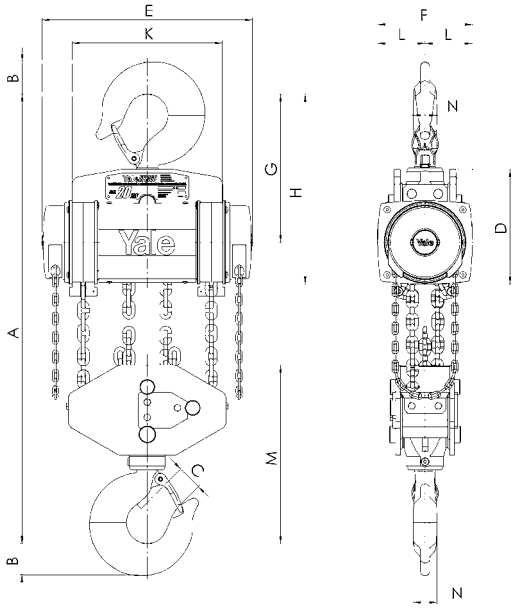

Yale*lift 360*, 20000 kg, six falls

Yale*lift 360*

ARCTIC EDITION

Hand chain hoist

Capacity 500 - 20000 kg

As with the Yalelift 360, we are also introducing the Yale UNOplus Series A in *ARCTIC EDITION*, a hand lever hoist for extreme applications.

It was ensured that all functions even under extremes temperatures work satisfactory. Materials used for this purpose as well as lubricants adapted to the requirements and tested and certified in complex low-temperature test procedures, which means that the user can work safely and productively with the YaleUNOplus Series A, allows temperatures down to -40°C.

In addition to static tests, dynamic low-temperature tests were also carried out to rule out malfunctions and material failure.

We can confirm the user's suitability with a certificate!

360°

EXPERIENCE THE ADVANTAGE OF 360°

TESTED APPROVED -40°C

INFO

Standard hoists according to EN13157
(cranes - safety - hand operated cranes)

5.1.12 Temperature
Hand chain blocks and their components shall be capable of operating within an ambient temperature range of -10°C to +50°C unless another temperature range is agreed between the manufacturer and the purchaser. Standard hoist products from CMCO are suitable for a temperature range of -20°C to +50°C!

Technical data Yale*lift 360 ARCTIC EDITION*

Model	Art-No.	Capacity kg	Number of chain falls	Chain dimensions d x p in mm/ design	Lift per 1 m hand chain overhaul mm	Handle pull at WLL daN	Weight at standard lift (3 m) kg
YL 500 *ARCTIC EDITION*	192099205	500	1	5 x 15 - T	33	21	9
YL 1000 *ARCTIC EDITION*	192099206	1000	1	6 x 18 - T	20	30	13
YL 2000 *ARCTIC EDITION*	192099207	2000	1	8 x 24 - T	14	32	21
YL 3000 *ARCTIC EDITION*	192099208	3000	1	10 x 30 - V	12	38	34
YL 5000 *ARCTIC EDITION*	192099209	5000	2	10 x 30 - T	6	34	48
YL 10000 *ARCTIC EDITION*	192099210	10000	3	10 x 30 - V	4	44	71
YL 20000 *ARCTIC EDITION*	192099211	20000	6	10 x 30 - V	2	2 x 44	196

Dimensions Yale*lift 360 ARCTIC EDITION*

Model	**YL 500 *ARCTIC EDITION***	**YL 1000 *ARCTIC EDITION***	**YL 2000 *ARCTIC EDITION***	**YL 3000 *ARCTIC EDITION***	**YL 5000 *ARCTIC EDITION***	**YL 10000 *ARCTIC EDITION***	**YL 20000 *ARCTIC EDITION***
A min., mm	300	335	395	520	654	825	1065
B, mm	17	22	30	38	45	68	85
C, mm	24	29	35	40	47	68	64
D, mm	133	156	182	220	220	220	303
E, mm	148	175	203	250	250	383	555
F, mm	148	167	194	219	219	219	250
G, mm	139	164	192	225	242	326	391
H, mm	206	242	283	335	352	436	501
I, mm	24	24	31	34	21	136	–
K, mm	61	70	83	95	95	95	396
L, mm	87	97	111	124	124	124	125
M, mm	110	125	156	178	285	401	471
N, mm	14	19	22	30	37	50	56

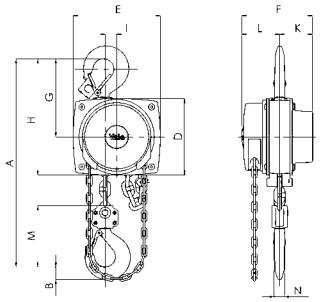

Yale*lift 360*, 500 - 3000 kg, single fall

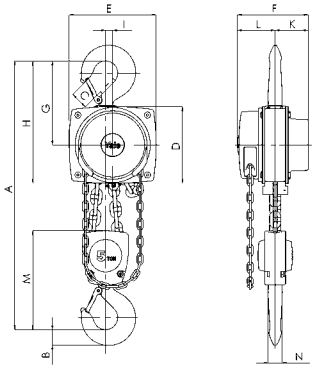

Yale*lift 360*, 5000 kg, double fall

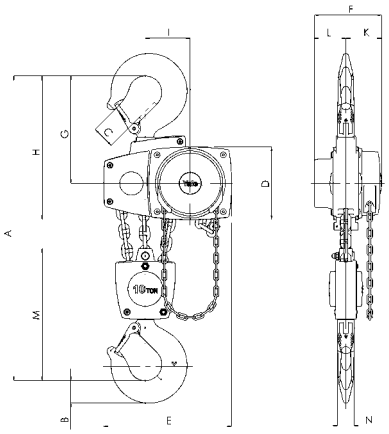

Yale*lift 360*, 10000 kg, three falls

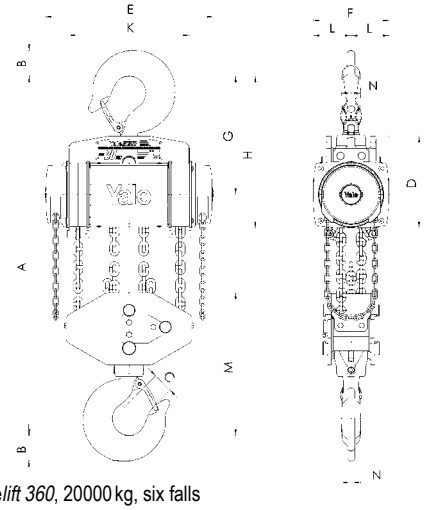

Yale*lift 360*, 20000 kg, six falls

Depicted rubber buffers are optionally available!

Yale*lift 360*

YLIT – Hand chain hoist with integrated push or with integrated geared trolley

Capacity 500 - 20000 kg

The combination of the Yale*lift 360* with a low headroom manual trolley provides even more flexibility in the application.

Features

- All units of this series up to a capacity of 3000 kg are built with a single chain fall, the min. headroom (Dim. A) has been further reduced. Ideal for applications with low ceilings and limited headroom.
- The approved and almost stepless adjustment system of the trolley enables the simple and quick assembly due to adjusting nuts.
- Trolleys up to 5 t capacity are offered for two beam ranges; range A for a flange width of up to 180 mm is standard and covers approx. 80 % of all applications. Conversion to range B for beam width up to 300 mm can be easily accomplished.
- The trolley wheels are designed for a max. beam profile incline of 14 % (DIN 1025 - part 1), excellent rolling features are guaranteed by pre-lubricated, encapsulated ball bearings.
- Anti-drop and anti-tilt devices as standard.

Optional

- Adjustable overload protection device.
- Chain container
- Rubber buffers
- Corrosion resistant version.
- Beam locking device to secure the unloaded hoist with integrated trolley in a fixed position on the beam (park position e.g. on ships).

360°

EXPERIENCE THE ADVANTAGE OF 360°

UPGRADE

SIMPLE & FLEXIBLE

FROM *360* TO Yale*lift* IT

Technical data Yale*lift* ITP - with integrated push trolley

Model	Art-No.	Capacity in kg/ Number of chain falls	Size	Beam flange width b mm	Beam flange thickness t max. mm	Curve radius min. m	Weight at standard lift (3 m) kg
YL ITP 500	N04900044	500/1	A	50 - 180	19	0.9	20
YL ITP 1000	N04900045	1000/1	A	50 - 180	19	0.9	27
YL ITP 2000	N04900046	2000/1	A	58 - 180	19	1.15	44
YL ITP 3000	N04900047	3000/1	A	74 - 180	27	1.5	77
YL ITP 5000	N04900020	5000/2	A	98 - 180	27	2.0	125
YL ITP 500	–	500/1	B	180 - 300	19	0.9	21
YL ITP 1000	–	1000/1	B	180 - 300	19	0.9	29
YL ITP 2000	–	2000/1	B	180 - 300	19	1.15	46
YL ITP 3000	–	3000/1	B	180 - 300	27	1.4	79
YL ITP 5000	–	5000/2	B	180 - 300	27	1.8	129

Technical data Yale*lift* ITG - with integrated geared trolley

Model	Art-No.	Capacity in kg/ Number of chain falls	Size	Beam flange width b mm	Beam flange thickness t max. mm	Curve radius min. m	Weight at standard lift (3 m) kg
YL ITG 500	N04900056	500/1	A	50 - 180	19	0.9	24
YL ITG 1000	N04900057	1000/1	A	50 - 180	19	0.9	32
YL ITG 2000	N04900058	2000/1	A	58 - 180	19	1.15	49
YL ITG 3000	N04900059	3000/1	A	74 - 180	27	1.5	82
YL ITG 5000	N04900060	5000/2	A	98 - 180	27	2.0	130
YL ITG 500	–	500/1	B	180 - 300	19	0.9	25
YL ITG 1000	–	1000/1	B	180 - 300	19	0.9	33
YL ITG 2000	–	2000/1	B	180 - 300	19	1.15	50
YL ITG 3000	–	3000/1	B	180 - 300	27	1.4	84
YL ITG 5000	–	5000/2	B	180 - 300	27	1.8	134
YL ITG 10000	N04900061	10000/3	B	125 - 310	40	1.8	202
YL ITG 20000 [1]	N04900055	20000/6	B	180 - 310	40	9.5	on request

[1] Dimensions on request

COMPLETE SERIES YALELIFT

CAPACITIES FROM 500 - 20000 KG

WITH

INTEGRATED PUSH OR GEARED TROLLEY

We are pleased to send you our new Atex catalogue in PDF format.

Dimensions Yale*lift* ITP/ITG

Model	YLIT 500	YLIT 1000	YLIT 2000	YLIT 3000	YLIT 5000	YLIT 10000
A min., mm	245	272	323	382	550	784
A1, mm	158	178	205.5	252	260.5	380
A2, mm	–	–	–	–	–	–
B, mm	17	22	30	38	45	68
C, mm	24	29	35	40	47	68
D, mm	14	19	22	30	37	50
F (Geared trolley), mm	92	92	91	107	149.5	113
H1, mm	24.5	24	23.5	32	30.5	55
I (Push trolley), mm	71.5	71.5	95.5	131	142.5	169
I (Geared trolley), mm	76.5	76.5	98	132.5	148.5	169
L, mm	270	310	360	445	525	430
L1, mm	130	130	150	180	209	200
L2, mm	159	175	207	256	283	261
M, mm	M 18	M 22	M 27	M 30	M 42	M 48
O, mm	60	60	80	112	125	150
P (Geared trolley), mm	108	110	112	112	117	158
T (Area A), mm	280	290	305	320	364	–
T (Area B), mm	400	410	425	440	484	540

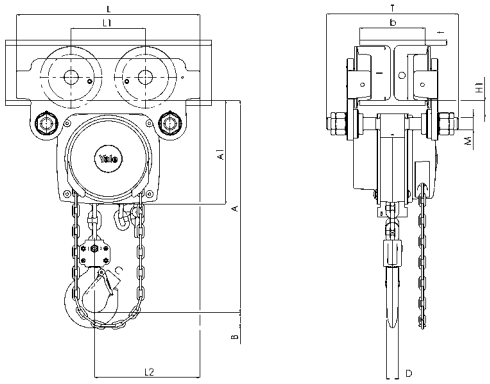

Yale*lift* ITP, 500 - 3000 kg, single fall

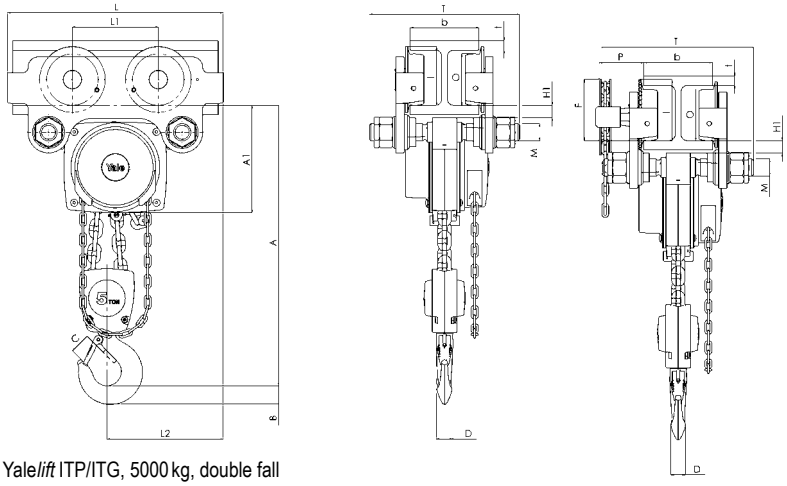

Yale*lift* ITP/ITG, 5000 kg, double fall

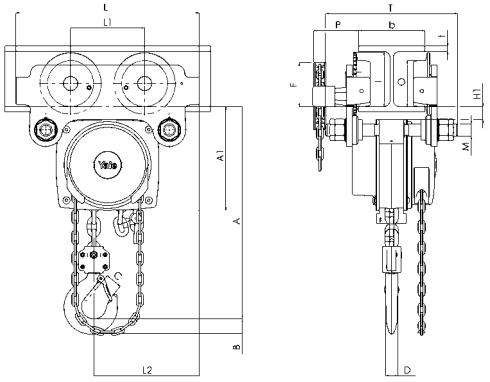

Yale*lift* ITG, 500 - 3000 kg, single fall

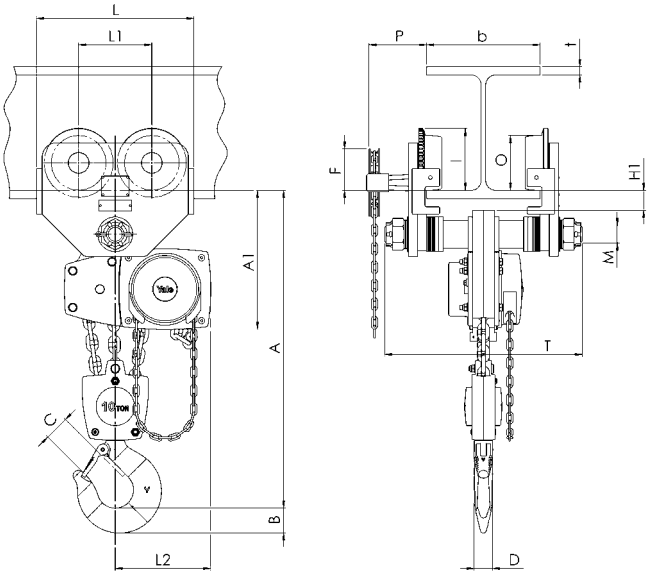

Yale*lift* ITG, 10000 kg, three falls

Yale*lift 360*

YLLH – Hand chain hoist with integrated push or with integrated geared trolley (low headroom)

Capacity 500 - 10000 kg

The hand chain hoist Yale*lift* LH with integrated low headroom manual trolley is the consequent further development of the Yale*lift* IT. Wherever an even smaller headroom is essential, the Yale*lift* LH is the ideal choice.

Features

- The specially developed chain reeving system and chain guide allow the bottom block to be pulled laterally to the hoist even further up and almost against the beam flange.
- The integrated design of the innovative Yale*lift* LH uses the same manual trolleys as incorporated in the Yale*lift* IT series.
- All units of this series up to a capacity of 3000 kg are built with a single chain fall.
- The approved and almost stepless adjustment system of the trolley enables the simple and quick assembly due to adjusting nuts.
- Trolleys up to 5 t capacity are offered for two beam ranges; range A for a flange width of up to 180 mm is standard and covers approx. 80 % of all applications. Conversion to range B for beam width up to 300 mm can be easily accomplished.
- The trolley wheels are designed for a max. beam profile incline of 14 % (DIN 1025 - part 1), excellent rolling features are guaranteed by pre-lubricated, encapsulated ball bearings.
- The low headroom version of the Yale*lift* IT is adjustable to fit a wide range of beam profiles (e.g. INP, IPE, IPB).
- Anti-drop and anti-tilt devices as standard.

Optional

- Adjustable overload protection device.
- Chain container
- Rubber buffers
- Corrosion resistant version.
- Beam locking device to secure the unloaded hoist with integrated trolley in a fixed position on the beam (park position e.g. on ships).

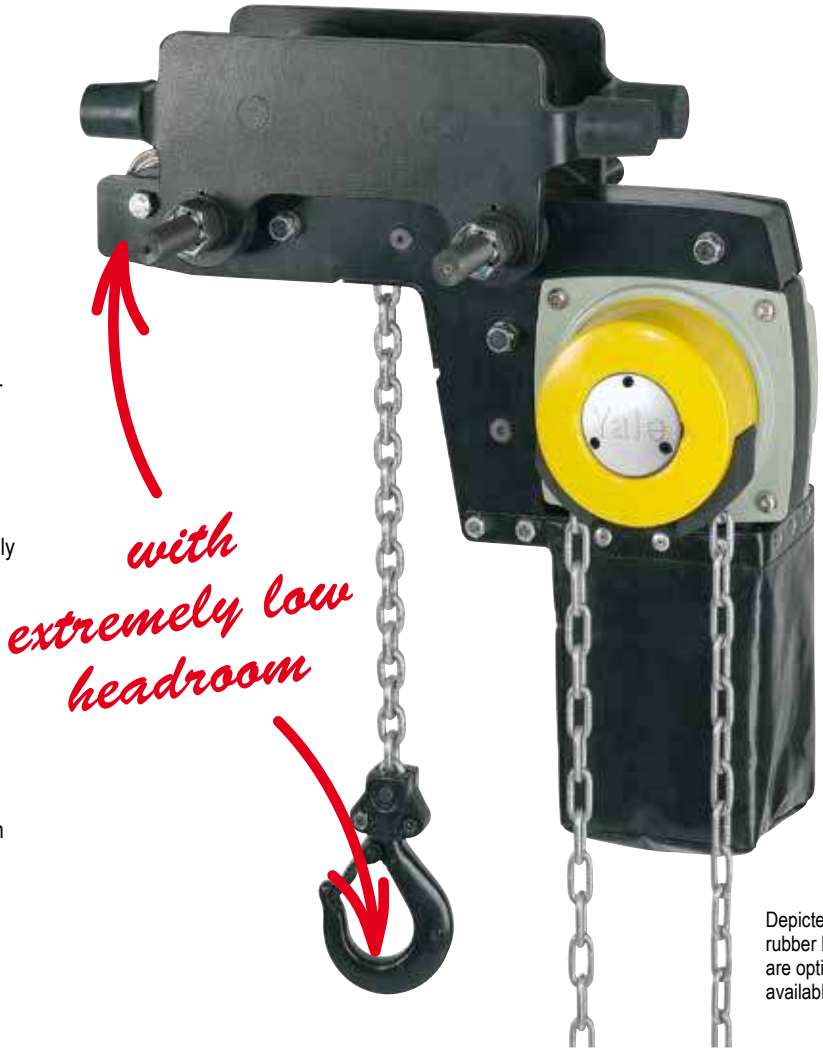

Depicted rubber buffers are optionally available!

360°

EXPERIENCE THE
ADVANTAGE OF 360°

We are pleased to send you our new Atex catalogue in PDF format.

Technical data Yale*lift* LHP - with integrated push trolley

Model	Art-No.	Capacity in kg/ Number of chain falls	Size	Beam flange width b mm	Beam flange thickness t max. mm	Curve radius min. m	Weight at standard lift (3 m) kg
YL LHP 500	N05600017	500/1	A	60 - 180	19	0.9	27
YL LHP 1000	N05600018	1000/1	A	70 - 180	19	0.9	35
YL LHP 2000	N05600019	2000/1	A	82 - 180	19	1.15	61
YL LHP 3000	N05600020	3000/1	A	100 - 180	19	1.5	107
YL LHP 5000	N05600021	5000/2	A	110 - 180	27	2.0	152
YL LHP 500	–	500/1	B	180 - 300	19	0.9	27
YL LHP 1000	–	1000/1	B	180 - 300	19	0.9	36
YL LHP 2000	–	2000/1	B	180 - 300	19	1.15	62
YL LHP 3000	–	3000/1	B	180 - 300	19	1.4	109
YL LHP 5000	–	5000/2	B	180 - 300	27	1.8	156

Technical data Yale*lift* LHG - with integrated geared trolley

Model	Art-No.	Capacity in kg/ Number of chain falls	Size	Beam flange width b mm	Beam flange thickness t max. mm	Curve radius min. m	Weight at standard lift (3 m) kg
YL LHG 500	N05600022	500/1	A	60 - 180	19	0.9	31
YL LHG 1000	N05600023	1000/1	A	70 - 180	19	0.9	40
YL LHG 2000	N05600024	2000/1	A	82 - 180	19	1.15	65
YL LHG 3000	N05600025	3000/1	A	100 - 180	19	1.5	112
YL LHG 5000	N05600026	5000/2	A	110 - 180	27	2.0	157
YL LHG 10000	192038865	10000/3	A	125 - 210	40	1.8	230
YL LHG 500	–	500/1	B	180 - 300	19	0.9	32
YL LHG 1000	–	1000/1	B	180 - 300	19	0.9	41
YL LHG 2000	–	2000/1	B	180 - 300	19	1.15	67
YL LHG 3000	–	3000/1	B	180 - 300	19	1.4	114
YL LHG 5000	–	5000/2	B	180 - 300	27	1.8	161
YL LHG 10000	N05600027	10000/3	B	190 - 310	40	1.8	232

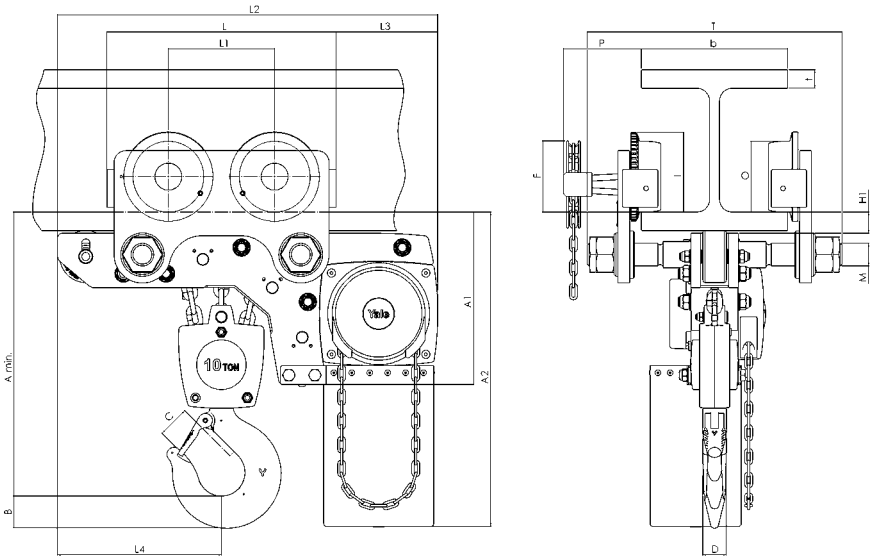

Yale*lift* LHG, 10000 kg, three falls

Dimensions Yale*lift* LH

Model	YLLH 500	YLLH 1000	YLLH 2000	YLLH 3000	YLLH 5000	YLLH 10000
A min., mm	188	211	264	316	425	565
A1, mm	223	250	289	346	345	365
A2, mm	381	427	511	614	612	665
B, mm	17	22	30	38	45	68
C, mm	24	29	35	40	47	68
D, mm	14	19	22	30	37	50
F (Geared trolley), mm	92	92	91	107	150	150
H1, mm	24	24	24	32	31	45
I (Push trolley), mm	72	72	96	131	143	–
I (Geared trolley), mm	77	77	98	133	149	170
L, mm	270	310	360	445	525	485
L1, mm	130	130	150	180	209	225
L2, mm	444	488	582	690	720	805
L3, mm	124	135	172	203	175	215
L4, mm	184	201	230	265	283	348
M, mm	M 18	M 22	M 27	M 30	M 42	M 48
O, mm	60	60	80	112	125	150
P (Geared trolley), mm	108	110	112	112	117	165
T (Area A), mm	280	290	305	320	364	440
T (Area B), mm	400	410	425	440	484	540

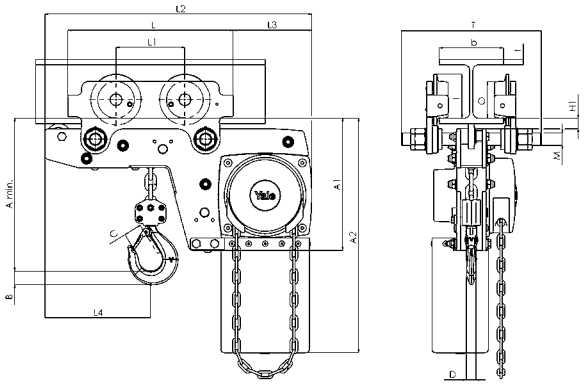

Yale*lift* LHP, 500 - 3000 kg, single fall

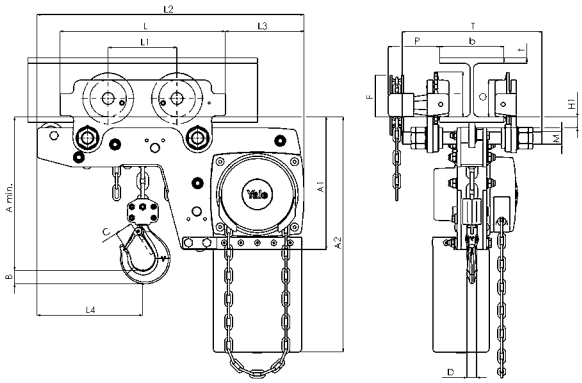

Yale*lift* LHG, 500 - 3000 kg, single fall

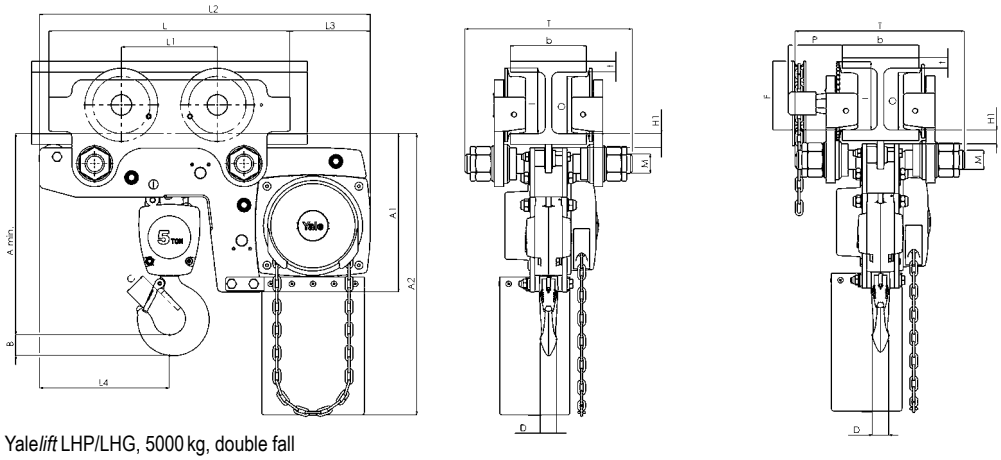

Yale*lift* LHP/LHG, 5000 kg, double fall

Yale*MINI 360*

Hand chain hoist

new!

Capacity 250 - 500 kg

The smallest of the Yale hand chain hoists has a compact design and a hand chain wheel cover that allows a rotation of 360°. This ensures a high level of safety, as it is possible to work outside the danger zone.

The housing of the new YaleMINI 360 is made of die-cast aluminium, which makes it a very lightweight hand chain hoist. Due to the low weight, there are countless possible applications, e.g. assembly work in industry, car repair shops, crafts etc.

Features

- With the 360° rotating hand chain guide, a very large work area can be covered, this makes it possible for the operator to stand clear of the danger zone.
- Compact design, light weight, easy to carry.
- Made of die-cast aluminium.
- Due to the compact housing, all internal parts are protected. The device can therefore also be used outdoors or in rough environments.
- The load pressure brake complies with all technical regulations, thus the load is held in any position.
- The standard equipment includes forged lifting and load hooks made from age-resistant high-alloy tempered steel, which open when overloaded without breaking. The hooks can be rotate through 360 degrees and are fitted with robust safey catches.
- The galvanized steel load chain complies with all applicable national and international regulations. The optimal fit to the load chain wheel ensures safe and long lasting operation.

360°

EXPERIENCE THE ADVANTAGE OF 360°

Due to its size, the YaleMINI 360 fits into every tool box and supports the operator in his work.

Technical data Yale*MINI 360*

Model	Art.-No.	Capacity kg	Number of chain falls	Chain dimensions d x p in mm/ design	Lift per 1 m hand chain overhaul mm	Handle pull at WLL daN	Weight at standard lift (3 m) kg
Yale*MINI 360* 250	192084199	250	1	3 x 9 - T	40	25	2.9
Yale*MINI 360* 500	192084200	500	1	4 x 12 - T	25	24	4.3

Dimensions Yale*MINI 360*

Model	Yale*MINI 360* 250	Yale*MINI 360* 500
A min., mm	245	285
B, mm	17	22
C, mm	21	23
D, mm	13	18
E, mm	84	104
F, mm	87	101
G, mm	51	58
H, mm	36	43
K, mm	150	175

INFO

Yale hoists and trolleys are not designed for passenger elevation applications and must not be used for this purpose.

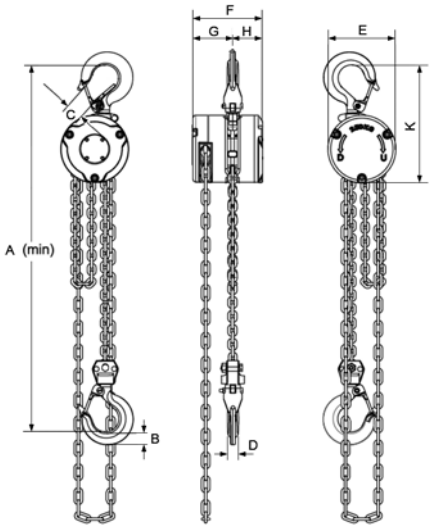

Capacity 250 kg

Capacity 500 kg

Lifting application

Pulling application

Corroded Yalelift with integrated trolley
– still functional after 9 years in use

MKS coated hand chain hoist Yalelift 360 with integrated trolley and buffers.

This is the standard version with the classification Atex Basic. However, the unit can also be used in non-explosive areas without hesitation.

Corrosion protection

What does corrosion actually mean?

Corrosion is a term from the Latin “corrodere” and means to decompose or eat away and is, from a technical point of view the reaction of a material with its environment. In popular speech, metals are also referred as “rusting”.

How does corrosion occur?

Nowadays, metals are exposed to a wide variety of environmental influences, such as climate and air pollution. This can change their structure. Especially with metals such as iron or steel, oxide formation has a negative effect on the material. Rust develops as a product of corrosion.
In untreated or damaged areas, humidity can hit the metal surface and thus attack it. The corresponding area begins to corrode to the point of rusting through completely.

Types of corrosion

Technically speaking, types of corrosion are classified according to material, cause and appearance and also according to where they occur.
The standard DIN EN ISO 8044 defines 37 different types of corrosion.
One of the best-known types of corrosion is contact corrosion, in which an electrochemical reaction between two different metallic materials in conjunction with e.g. humidity leads to corrosion of the less noble metal.

Other types of corrosion can be:

- pitting corrosion,
- surface corrosion,
- vibration corrosion cracking,
- gap corrosion, etc.

Areas of application

Corrosion-protected equipment with galvanised load or hand chains or rust and acid-resistant chains should be used wherever increased demands are made on corrosion resistance are required. Typical applications are in the food industry (e.g. dairies, slaughterhouses, etc.), the chemical industry (e.g. paper industry, colouring), agriculture or wastewater treatment plants.

Preventive corrosion protection

To prevent early corrosion, all our products are coated. This coating varies depending on the model and is carried out in the form of a wet coating, powder or MKS coating.

For specifications on corrosion protection, the DIN EN ISO 12944 series of standards is used in many cases. This series of standards is used for steel structures or structures whose components are made of unalloyed or low-alloyed steel with a thickness of at least 3 mm and which are designed in accordance with a structural safety designed.

We can only base our products on the corrosivity categories contained in this series of standards (see table below). For some models, increased corrosion protection can be achieved by applying additional or thicker coatings. You will find a detailed list on the next page.

INFO

Corrosion causes annually in Germany alone 75 billion € damage!

Corrosion protection classes in accordance to DIN EN ISO 12944

Atmospheric-Corrosivity categories, Corrosion stress	Corrosivity	Corrosion protection period	Protection period in years	Examples of typical environments
C1 very low	very low low-aggressive inside	short (L) medium (M) long (H) very long (VH)	up to 7 7 to 15 15 to 25 > 25	Only indoor rooms, insulated buildings 60 % relative humidity
C2 low	low moderate aggressive outside/inside	short (L) medium (M) long (H) very long (VH)	up to 7 7 to 15 15 to 25 > 25	Slightly polluted atmosphere, dry climate, e.g. rural areas
C3 medium	moderate low-aggressive outside	short (L) medium (M) long (H) very long (VH)	up to 7 7 to 15 15 to 25 > 25	City and industrial atmosphere with moderate SO_2 pollution or moderate climate
C4 high	high moderately aggressive outside/inside	short (L) medium (M) long (H) very long (VH)	up to 7 7 to 15 15 to 25 > 25	Industrial and coastal atmosphere with moderate salt pollution
C5 very high	very high aggressive outside/inside	short (L) medium (M) long (H) very long (VH)	up to 7 7 to 15 15 to 25 > 25	Industrial atmosphere with high relative humidity and aggressive atmosphere as well as coastal atmosphere with high salt content
CX extremely	very high maritim outside/inside	short (L) medium (M) long (H) very long (VH)	up to 7 7 to 15 15 to 25 > 25	Offshore areas with high salt content, industrial areas with extreme humidity and aggressive atmosphere as well as subtropical and tropical atmosphere

MKS Coating

The MKS coating (micro corrosion protection system) is a coating of zinc and aluminium lamellae which primarily protect the unit against corrosion. Even thin layers - typically a system consisting of base and top coat - can achieve high protective effects against base metal corrosion (red rust).

This MKS coating is used on the models Yale*lift* 360 Atex and HTP/G Atex trolleys for use in explosion-protected areas, but also, for example in wastewater treatment plants.

Powder coating

This is a coating process in which a metal surface is coated with powder. A typical coating line consists of surface pre-treatment (cleaning and/or application of a conversion coating), intermediate drying, electrostatic coating zone and dryer. The workpieces are transported via a transport system. The powder coatings produced typically have layer thicknesses between 60 and 120 µm. However, depending on the application and surface characteristics, the coating thickness can also be above or below this range.

Wet painting

Varnish is a liquid coating material. This material is applied thinly to surfaces and built up into a continuous, solid film by chemical or physical processes (for example, evaporation of the solvent). Varnishes usually consist of binders such as resins, dispersions or emulsions, fillers, pigments, solvents and additives.

Coating types as standard:

Model	Coating type		
	Wet painting	Powder coating	MKS Coating
CD 85	+		
Yalelift 360		++	
YL with integrated trolley[1]	+	++	
HTP/G	+		
CPE/CPA (with integrated trolley/Atex)	+		
Yalelift 360 Atex			+++
YL Atex with integrated trolley			+++
HTP/HTG Atex			+++

[1]Hand chain hoist powder coated/trolley wet painted

Additional coating possible for:

Model	Coating type		
	Wet painting	Powder coating	MKS + Powder coating
CD 85	x		
Yalelift 360		x	
YL with integrated trolley[1]	x	x	
HTP/G	x		
CPE/CPA (with integrated trolley/Atex)	x		
Yalelift 360 Atex			x
YL Atex with integrated trolley			x
HTP/HTG Atex			x

[1]Hand chain hoist powder coated/trolley wet painted

All three types of coating have the same purpose:

- **Protection**
  (protective effect, such as protective coating with combination of primer and top coat, protective varnishes),
- **Decoration**
  (optical effect, specific colour effect) and
- **Function**
  (special surface properties, such as modified electrical conductivity)

Selection criteria

The correct selection of an additional coating is essentially based on the following questions:

Where will the relevant equipment be used?

Chemical plants, refineries, off-/On-shore platforms etc.

What environmental stresses will the unit be exposed to?

This includes, for example, high humidity, industrial exhaust fumes, salty air, fluctuating temperature ranges, etc.

Layer thickness structure in general

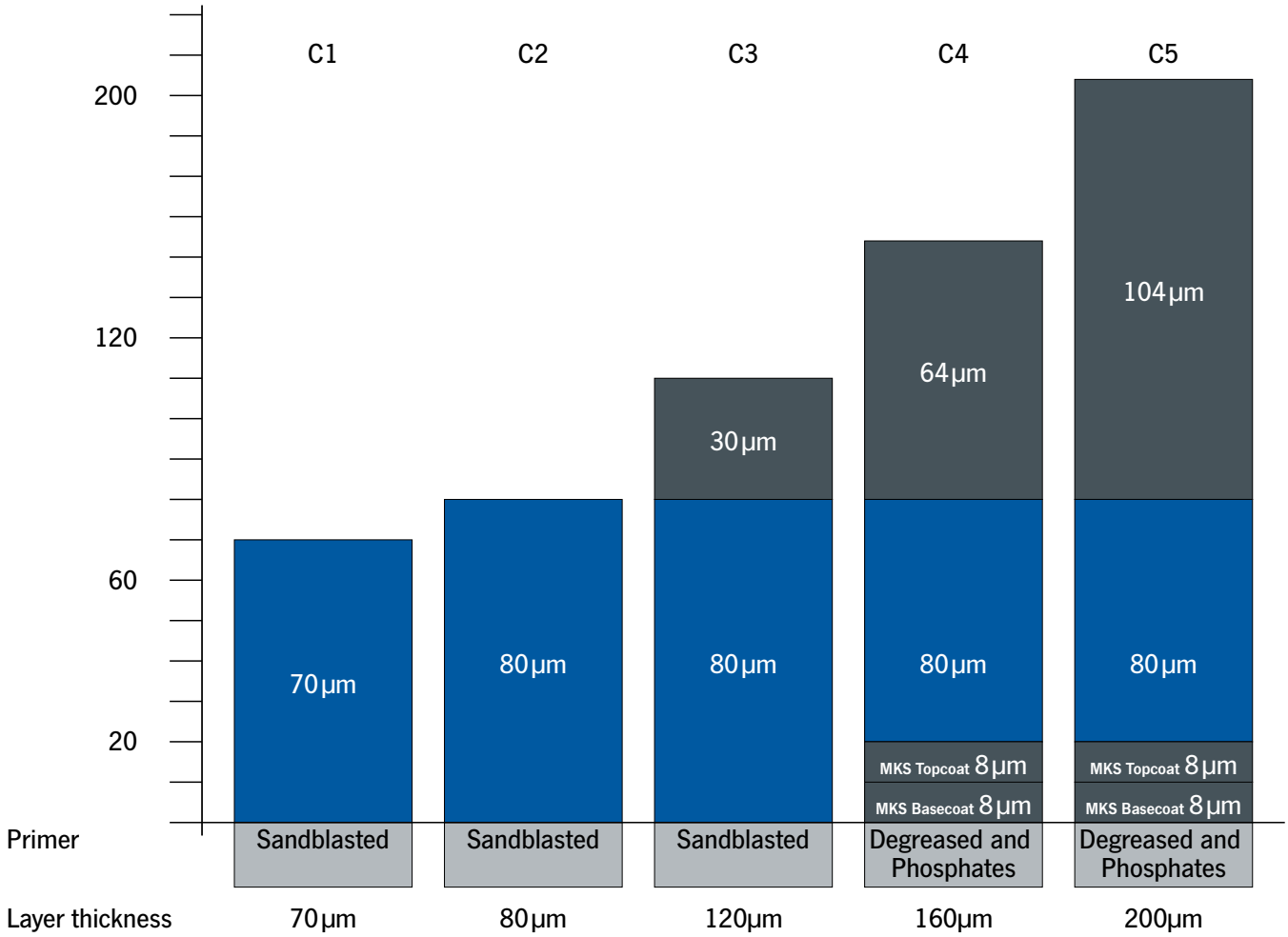

Up to C3 we cover all standard coatings (wet painting and powder coating) on our products.
This means that the corrosivity categories C1 and C2 are also covered.

INFO

We expressly point out that abrasion of the coating occurs on all external moving parts, which reduces the coating thickness. Depending on the model and type of base coating, base metal corrosion can therefore not be completely ruled out.

When measuring the coating thickness, slight deviations from the values given here are possible, depending on the measuring point.

A coating protocol can be prepared on request, at an additional charge.

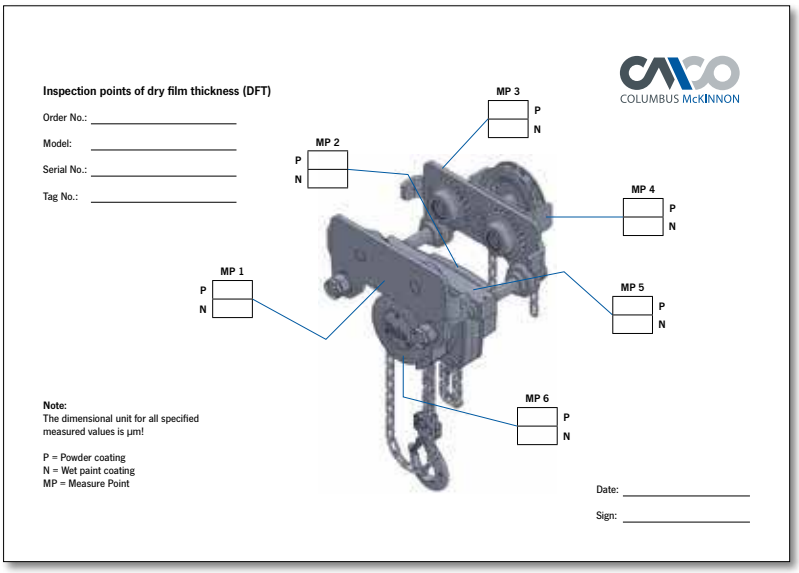

HTP (Push trolley)

HTG (Geared trolley)

SERIES EXTENSION

NOW WITH HIGH WWL!

30000 - 50000 kg

HTP and HTG
Push and geared trolley

Capacity 500 - 50000 kg

The trolley enables the exact positioning or easy traversing of large loads with either manual or powered hoisting equipment.

Features

- It has excellent rolling features due to machined steel wheels mounted on prelubricated, encapsulated ball bearings.
- Adjustable to fit a wide range of beam widths and profiles (e.g. INP, IPE and IPB).
- Adjustments are made by rotating the clevis load bar which also ensures the centred positioning of the hoist in the clevis – no creeping to the left or the right (up to 5000 kg capacity, from 8000 kg upwards the traverse is adjusted via sleeves and washers).
- The trolley wheels are designed for a max. beam profile incline of 14 % (DIN 1025 - part 1).

Optional

up to 20000 kg capacity:

- Rotating hand chain guide.
- Stainless steel hand chains.
- Locking device to secure the trolley in position on the beam (park position e.g. on ships).
- Both versions are also available with high-temperature bearings up to 350°. From 250° C, however, the load capacity is reduced to 90 % of the nominal load and from 300° C the corresponding capacity is reduced to 80 % of the nominal load.

all capacities:

- Buffers

INFO

Yale hoists and trolleys are not designed for passenger elevation applications and must not be used for this purpose.

Technical data HTP

Model	Art.-No.	Capacity kg	Size	Beam flange width b mm	Beam flange thickness t max. mm	Curve radius min. m	Hand effort at WLL daN	Weight kg	Weight with locking device kg
HTP 500	N05141273	500	A	50 - 220	25	0.9	–	8.0	14.5
HTP 1000	N05141274	1000	A	50 - 220	25	0.9	–	9.0	17.0
HTP 2000	N05141275	2000	A	66 - 220	25	1.15	–	16.0	24.0
HTP 3000	N05141276	3000	A	74 - 220	25	1.4	–	32.0	41.2
HTP 5000	N05141277	5000	A	90 - 220	25	1.8	–	48.0	58.5
HTP 500	N05148305	500	B	160 - 300	40	0.9	–	10.6	17.1
HTP 1000	N05148306	1000	B	160 - 300	40	0.9	–	12.0	20.0
HTP 2000	N05148307	2000	B	160 - 300	40	1.15	–	19.3	27.3
HTP 3000	N05148308	3000	B	160 - 300	40	1.4	–	35.8	45.0
HTP 5000	N05148309	5000	B	180 - 300	40	1.8	–	52.2	62.7

Technical data HTG

Model	Art.-No.	Capacity kg	Size	Beam flange width b mm	Beam flange thickness t max. mm	Curve radius min. m	Hand effort at WLL daN	Weight [1] kg	Weight [1] with locking device kg
HTG 500	N05300006	500	A	50 - 220	25	0.9	3	9.7	16.2
HTG 1000	N05300007	1000	A	50 - 220	25	0.9	6	11.2	19.2
HTG 2000	N05300008	2000	A	66 - 220	25	1.15	7	18.0	26.0
HTG 3000	N05300009	3000	A	74 - 220	25	1.4	7	35.4	44.6
HTG 5000	N05300010	5000	A	90 - 220	25	1.8	9	51.8	62.3
HTG 500	N05300011	500	B	160 - 300	40	0.9	3	12.6	19.1
HTG 1000	N05300012	1000	B	160 - 300	40	0.9	6	14.1	22.1
HTG 2000	N05300013	2000	B	160 - 300	40	1.15	7	21.3	29.3
HTG 3000	N05300014	3000	B	160 - 300	40	1.4	7	39.2	48.4
HTG 5000	N05300015	5000	B	180 - 300	40	1.8	9	56.0	66.5
HTG 8000	N05300016	8000	B	125 - 310	40	1.8	14	104.0	–
HTG 10000	N05300017	10000	B	125 - 310	40	1.8	14	104.0	–
HTG 15000	N05300018	15000	B	125 - 310	40	5.0	29	230.0	–
HTG 20000	N05300019	20000	B	125 - 310	40	5.0	29	230.0	–
HTG 30000	192045613	30000	B	175 - 305	34	1.6	24	248.0	–
HTG 50000	192045614	50000	B	175 - 305	34	5.1	25	489.0	–

[1] Weight without hand chain

We are pleased to send you our new Atex catalogue in PDF format.

Dimensions HTP

Model	HTP 500-A	HTP 1000-A	HTP 2000-A	HTP 3000-A	HTP 5000-A	HTP 500-B	HTP 1000-B	HTP 2000-B	HTP 3000-B	HTP 5000-B
A, mm	77	82.5	98.5	114	132.5	92	97.5	113.5	129	147.5
D, mm	16	17	22	26	33	16	17	22	26	33
D1, mm	25	30	40	48	60	25	30	40	48	60
D2, mm	30	35	47	58	70	30	35	47	58	70
F1, mm	57.5	57.5	57.5	57.5	57.5	57.5	57.5	57.5	57.5	57.5
H1, mm	30.5	30.5	30.5	30	30	45.5	45.5	45.5	45	49.5
I (HTP), mm	71.5	71.5	95.5	131	142.5	71.5	71.5	95.5	131	142.5
L, mm	260	260	310	390	450	260	260	310	390	450
L1, mm	130	130	150	180	209	130	130	150	180	209
O, mm	60	60	80	112	125	60	60	80	112	125
P1, mm	168	168	168	168	168	168	168	168	168	168
P2, mm	146	150	155	160	167.5	177	177	177	180	187.5
L3, mm	346	346	396	476	556	346	346	396	476	556

Dimensions HTG

Model	HTG 500-A	HTG 1000-A	HTG 2000-A	HTG 3000-A	HTG 5000-A	HTG 500-B	HTG 1000-B	HTG 2000-B	HTG 3000-B	HTG 5000-B
A, mm	77	82.5	98.5	114	132.5	92	97.5	113.5	129	147.5
D, mm	16	17	22	26	33	16	17	22	26	33
D1, mm	25	30	40	48	60	25	30	40	48	60
D2, mm	30	35	47	58	70	30	35	47	58	70
F (HTG), mm	91.5	91.5	90.5	107.5	149.5	91.5	91.5	90.5	107.5	149.5
F1, mm	57.5	57.5	57.5	57.5	57.5	57.5	57.5	57.5	57.5	57.5
H1, mm	30.5	30.5	30.5	30	30	45.5	45.5	45.5	45	45
I (HTG), mm	76.5	76.5	98	132.5	148.5	76.5	76.5	98	132.5	148.5
L, mm	260	260	310	390	450	260	260	310	390	450
L1, mm	130	130	150	180	209	130	130	150	180	209
O, mm	60	60	80	112	125	60	60	80	112	125
P (HTG), mm	110	110	110	110	110	110	110	110	110	110
P1, mm	168	168	168	168	168	168	168	168	168	168
P2, mm	146	150	155	160	167.5	187	187	189.5	191.5	191.5
L3, mm	346	346	396	476	556	346	346	396	476	556
P3, mm	194	194	194	195	195	194	194	194	195	195

Dimensions HTG

Model	HTG 8000-B	HTG 10000-B	HTG 15000-B	HTG 20000-B	HTG 30000-B	HTG 50000-B
A, mm	276	276	270	270	261	310
B, mm	52	52	70	70	65	100
D, mm	30	30	35	35	35	60
D1, mm	80	80	110	110	90	125
D2, mm	114	114	155	155	125	195
F (HTG), mm	113	113	113	113	93	93
F1, mm	77	77	–	–	–	–
H1, mm	45	45	45	45	40	40
I (HTG), mm	170	170	170	170	224	224
L, mm	430	430	870	870	625	1.260
L1, mm	200	200	200	200	296	296
L2, mm	–	–	115	115	164.5	164.5
O, mm	150	150	150	150	196	196
P (HTG), mm	163	163	163	163	165	165
P1, mm	193	193	–	–	–	–
T, mm	270	270	270	270	333	343
L3, mm	536	536	976	976	–	–

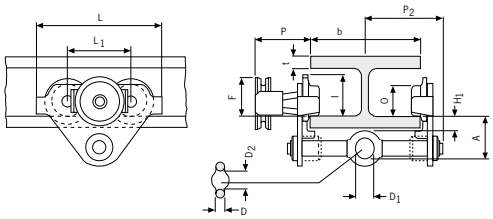

HTP/G, 500 - 5000 kg

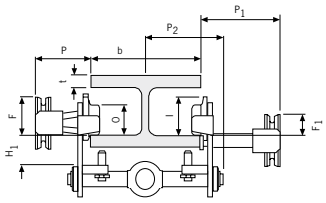

HTP/G, 500 - 5000 kg,
with locking device

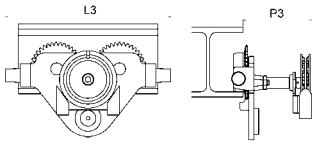

HTG, 500 - 5000 kg,
with rotating hand chain guide
and buffers

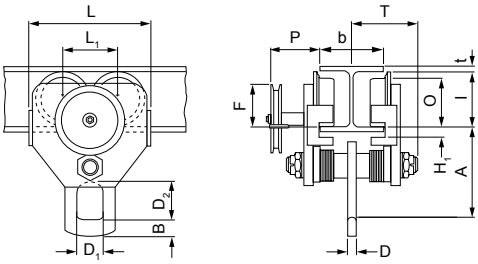

HTG, 10000 kg

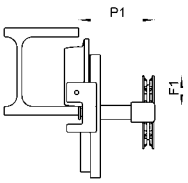

HTG, 10000 kg,
with locking device

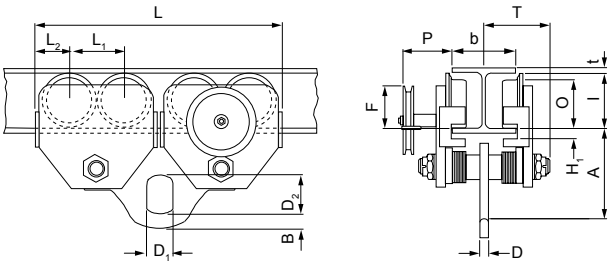

HTG, 15000 - 20000 kg

SERIES EXTENSION

NOW WITH HIGH WWL!

30000 - 50000 kg

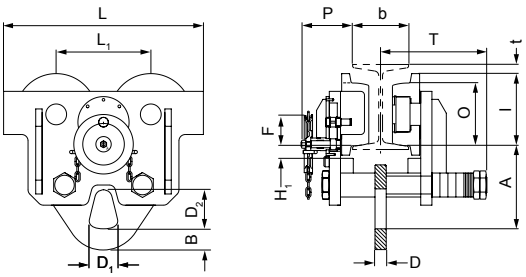

HTG, 30000 kg

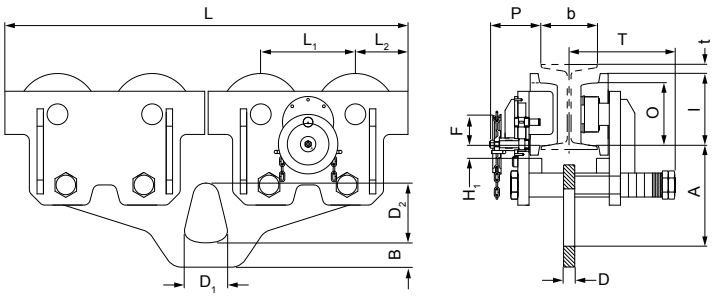

HTG, 50000 kg

CTP
Trolley clamp

Capacity 1000 - 3000 kg

Easy fitting to overhead beams for the attachment and transport of loads.

Features

- Central threaded spindle provides quick adjustment to the required beam width.
- Threaded spindle and clevis are zinc-plated for added corrosion protection.

Technical data CTP

Model	Art.-No.	Capacity kg	Beam flange width b mm	Curve radius min. m	Weight kg
CTP 1-A	NO5500024	1000	60 - 150	0.6	2.5
CTP 2-A	NO5500025	2000	75 - 200	0.9	9.9
CTP 2-B	NO5500026	2000	200 - 300	0.9	10.3
CTP 3-A	NO5500027	3000	75 - 200	1.15	17.5
CTP 3-B	NO5500028	3000	200 - 320	1.15	19.5

Dimensions CTP

Model	CTP 1-A	CTP 2-A	CTP 2-B	CTP 3-A	CTP 3-B
A, mm	82 - 109	106 - 155	136 - 191	128 - 171	150 - 212
D, mm	26	42	42	50	50
E, mm	22	20	20	22	22
H1, mm	20	24	24	30.5	30.5
I, mm	53	71.5	71.5	95.5	95.5
L, mm	160	260	260	310	310
L1, mm	75	130	130	150	150
M, mm	M12	M18	M18	M24	M24
O, mm	46	60	60	80	80
P, mm	153	205	255	220	280
T, mm	105	139	189	155	215
tmax., mm	15	25	25	25	25

INFO

Yale hoists and trolleys are not designed for passenger elevation applications and must not be used for this purpose.

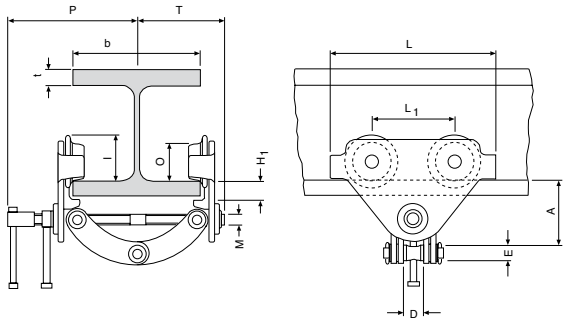

VTE-U, VTEF-U Electric trolley with shackle

Capacity 1000 - 5000 kg

Specially recommended for loads over 1000 kg, for transporting over long distances and/or when used frequently.

Suitable for almost all hoists with suspension hook due to universal shackle connection.
Travel motor with worm gear transmission ensures smooth start and self braking – a separate motor brake is not required.

Features

- Standard operating voltage:
  Euro-voltage 400 V, 3 Ph, 50 Hz.
  Single speed motors can be reconnected to 230 V, 3 Ph, 50 Hz.
- Motor protected to IP 55 against dust and water jets. Push-button pendant control IP 65.
- Compact, robust frame with low overall height.
- Wheels manufactured from fracture-proof steel. Smooth running due to machined surfaces and ball bearing mounting. Cambered profile suitable for flat and inclined beam profiles.
- Anti-drop and anti-tilt devices as standard.
- Easy adjusted to fit to a wide range of beam widths and profiles due to threaded spindles.

Optional

- Low voltage control 42 V
- Rubber buffers
- 230 V, 1 Ph, 50 Hz

Wheel with cambered profile

Threaded spindle

Anti-drop device with option to fit buffers

INFO

Yale hoists and trolleys are not designed for passenger elevation applications and must not be used for this purpose.

Technical data VTE-U, VTEF-U

Model	Art.-No.	Capacity kg	Travel speed m/min	Motor kW	Beam flange width A[2] mm	Beam flange thickness t max. mm	Curve radius min. at flange width A / B[2] m	Weight at flange width A / B[2] kg
VTE 1-A-18/U[1]	N06409625	1000	18[1]	0.18	58 - 180	19	0.9/0.9	19.5/25.2
VTEF 1-A-18/4,5/U[1]	N06409943	1000	18/4.5[1]	0.18/0.06	58 - 180	19	0.9/0.9	19.5/25.2
VTE 2-A-18/U[1]	N06409626	2000	18[1]	0.18	58 - 180	19	1.15/1.15	26/30.2
VTEF 2-A-18/4,5/U[1]	N06409945	2000	18/4.5[1]	0.18/0.06	58 - 180	19	1.15/1.15	26/30.2
VTE 3-A-11/U	N06409939	3000	11	0.37	74 - 180	27	1.5/1.4	51/53
VTEF 3-A-11/2,8/U	N06409947	3000	11/2.8	0.3/0.09	74 - 180	27	1.5/1.4	51/53
VTE 5-A-11/U	N06409941	5000	11	0.37	98 - 180	27	2.0/1.8	77/80
VTEF 5-A-11/2,8/U	N06409949	5000	11/2.8	0.3/0.09	98 - 180	27	2.0/1.8	77/80

[1] 11 or 11/2.8 m/min travel speed on request [2] Trolleys with beam flange width B are suitable for flange width of 180 - 300 mm

Dimensions VTE-U, VTEF-U

Model	VTE 1-A-18/U	VTE 2-A-18/U	VTE 3-A-11/U	VTE 5-A-11/U
A, mm	113	115	139	161
B, mm	b + 50	b + 54	b + 60	b + 70
C, mm	49	47	57	60
D, mm	16	16	19	22
E, mm	187	187	202	202
F, mm	94	94	94	94
G, mm	43	43	51	58
H, mm	129	128	144	178
H1, mm	24	24	32	32
I, mm	77	98	133	149
L1, mm	130	150	180	209
M, mm	155	180	208	263
N1G, mm	255	255	292	292
N2G, mm	263	263	296	296
O, mm	60	80	112	125
P, mm	123	123	129	121
Q, mm	145/205[3]	153/213[3]	160/220[3]	182/242[3]

[3] at beam flange width B

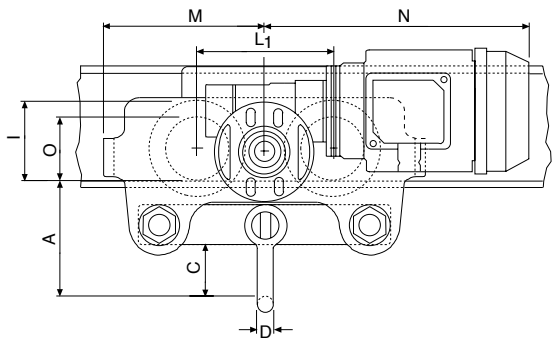

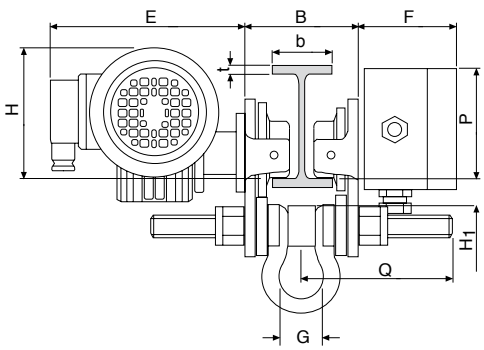

YC
Beam clamp

Capacity 1000 - 10000 kg

Provides a quick and versatile rigging point for hoisting equipment, pulley blocks or loads. Flexible application due to wide adjustment range. The central threaded spindle allows easy attachment and a safe and secure grip. The spindle can be secured against loosening.

INFO

Yale hoists and trolleys are not designed for passenger elevation applications and must not be used for this purpose.

Suitable as a horizontal anchor point.
Can also be used as a lifting clamp.

Technical data YC

Model	Art.-No.	Capacity kg	Beam flange width mm	Weight kg
YC 1	NO5406181	1000	75 - 230	3.4
YC 2	NO5406182	2000	75 - 230	3.8
YC 3	NO5407417	3000	80 - 320	7.6
YC 5	NO5407418	5000	90 - 320	11.0
YC 10	NO5407419	10000	90 - 320	17.2

Dimensions YC

Model	YC 1	YC 2	YC 3	YC 5	YC 10
A min., mm	115	115	180	180	175
A max., mm	150	150	225	225	220
A1, mm	78	78	85	95	95
A2, mm	246	246	325	325	325
B1, mm	186	186	232	242	268
B2, mm	350	350	455	445	480
b1, mm	75	75	80	90	90
b2, mm	230	230	320	320	320
C, mm	50	50	70	70	70
D, mm	3	4	6	10	14
E, mm	215	215	255	255	275
F1, mm	34	35	35	35	35
F2, mm	17	18	21	21	20
G1, mm	82	82	120	116	110
G2, mm	44	44	75	75	66
H, mm	20	20	22	28	38
J1, mm	14	14	30	30	34
J2, mm	21	21	34	34	35
K1, mm	48	50	60	60	60
K2, mm	31	32	40	42	40
L, mm	80	86	114	129	146

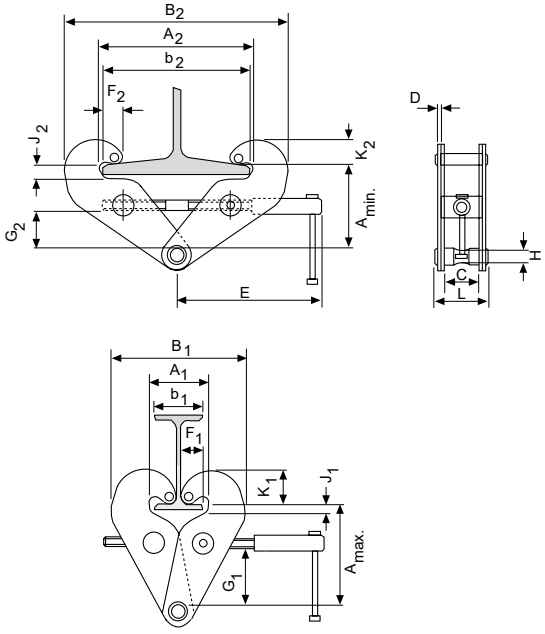

INFO

General information about electric chain hoists

Apart from the usual criterion such as lifting capacity, lifting speed and dimensions also consider following:

1. Choosing a motor according to FEM 9.683

In addition to the torque the decisive criterion for rating an electric motor is the heat it generates. Here we differentiate between two operational modes:

1.1 Intermittent duty

In this case the motor is designed for a series of equal cycles consisting of duty periods with constant load and rest periods. The heat generation depends on the relative duty cycle, that is, the relationsship between operating period under load, total operating time and the number of starts/hour.

$$ED = \frac{\text{Operating period}}{\text{Operating period + rest periods}} \%$$

The number of cycles that can be made under full load is calculated as follows:

$$S \approx 0.3 \times \frac{ED \times V}{H}$$

S = Cycles per hour
ED = Duty rating in %
V = Lifting speed in m/min
H = Average lifting height in m

A cycle consists of a motion of lifting, lowering and the rest periods. One must ensure that the lifting height does not exceed the value permitted by the percentage duty cycle referred to a cycle period of 10 minutes

$$H \leq \frac{ED \times V}{20}$$

and that simultaneously the permissible number of starts is not exceeded. It is generally accepted that a cycle consists of 6 starts.

1.2 Short time duty

Where special duty conditions exist (e.g. long hook path) the operating period must be of such length that the admissible temperature limit of the motor is not exceeded. For such cases intermittent duty must be replaced by short time duty. That is, the motor may be operated for up to 10 starts over a certain period (with Yale products 30 min). Thereafter the motor must cool down to room temperature.

1.3 Calculation example intermittant duty

Electric chain hoist	:	CPV 5-8
Lifting speed	:	8 m/min
Lifting height	:	2.8 m
Duty rating ED	:	50 %
c/h	:	180

Number of cycles per hour

$$S = 0.3 \times \frac{50 \times 8}{2.8} = 42.8$$

Max. lifting height

$$H = 2.8 \leq \frac{50 \times 8}{20} = 20\,m$$

Number of starts

$$N = \frac{25 \text{ cycles}}{\text{hour}} \times \frac{6 \text{ starts}}{\text{cycle}} = 150 \text{ c/h}$$

2. Classification of hoisting equipment according to FEM 9.511

To choose an optimal hoist the lifting capacity and also the classification group must be known. The classification group indicates the theoretical operating time of the mechanical components under full load:

Classification group	FEM ISO	1 Bm M3	1 Am M4	2 m M5	3 m M6
Operating time in h		400	800	1600	3200

If the hoist is operated as classified an actual operating time of around 10 years can be expected.
After this period a general overhaul is necessary.

To define the classification group following values must be determined:

2.1 Average operating time per day

The average operating time can be estimated or calculated as follows:

$$\text{Time/day} = \frac{\text{2 x average hook path} \times \text{cycles /hour} \times \text{time/ day}}{\text{60 x lifting speed}}$$

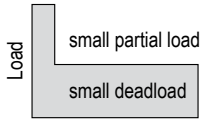

1 light

Hoists or parts thereof usually subject to very small loads and in exceptional cases only to maximum loads.

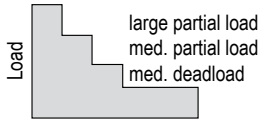

2 medium

Hoists or parts thereof usually subject to small loads but rather often to maximum loads.

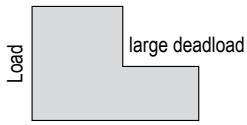

3 heavy

Hoists or parts thereof usually subject to medium loads but frequently to maximum loads.

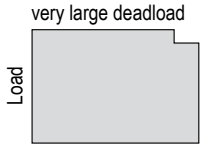

4 very heavy

Hoists or parts thereof usually subject to maximum or almost maximum loads.

2.2 Load spectrum

The load spectrum indicates to what extent a hoist or part thereof is subject to maximal stress or whether it is subject to smaller loads only. It can be calculated or estimated according to the diagrams on the right:

2.3 Classification

The classification group is defined by operating hours and load spectrum:

Load spectrum	Aver. op. hours per working day		
1 light	up to 2	2-4	4-8
2 medium	up to 1	1-2	2-4
3 heavy	up to 0.5	0.5-1	1-2
4 very heavy	up to 0.25	0.25-0.5	0.5-1
Classification group acc. to FEM/ISO	1 Bm/M3	1 Am/M4	2 m/M5

INFO

IP protection according to EN 60529

Depending on the operating and environmental conditions the damaging effect of water, foreign particles and dust and the contact with live or moving parts inside a motor is to be prevented by choosing a suitable protection.
The marking used to indicate the degree of protection consists of the letters IP followed by two characteristic numerals.
The marking applies to the unit as it is supplied and the defined or usual location of the unit.
The protection can change if the unit is located or fitted differently.

Motor surface cooled

Protection	1st digit		2nd digit
	Contact protection	Ingress of solid foreign particles	Ingress of liquid
IP 44	contact with tools or similar	against solid foreign bodies over 1 mm Ø	splashing from all directions
IP 50	complete protection against contact	damaging dust deposits	no protection
IP 54	contact with tools or similar	against solid foreign bodies over 1 mm Ø	splashing from all directions
IP 55	complete protection against contact	damaging dust deposits	water jets from all directions
IP 56	complete protection against contact	damaging dust deposits	momentarily flooding
IP 65	complete protection against contact	against ingress of dust	water jets from all directions

Protection against contact and solid foreign particles

First digit 0 No protection
No protection of persons against contact with live or moving parts inside the enclosure. No protection of equipment against ingress of solid foreign particles.

First digit 1 Protection against large solid foreign particles
Protection against accidental or inadvertent contact with live or moving parts inside the enclosure by a large surface of the human body, e.g. hand, but not protected against deliberate access to such parts.

First digit 2 Protection against med. size solid foreign particles
Protection against contact with live or moving parts inside the enclosure by fingers. Protection against ingress of medium size solid foreign particles of diameter greater than 12 mm.

First digit 3 Protection against small solid foreign particles
Protection against contact with live or moving parts inside the enclosure by tools, wires or such objects of thickness greater than 2.5 mm. Protection against ingress of small solid foreign particles of diameter greater than 2.5 mm.

First digit 4 Protection against granular structured foreign particles
Protection against contact with live or moving parts inside the enclosure by tools, wires or such objects of thickness greater than 1 mm.
Protection against ingress of granular structured solid foreign particles of diameter greater than 1 mm.

First digit 5 Protection against dust deposits
Complete protection against contact with live or moving parts inside the enclosure. Protection against harmful deposits of dust. The ingress of dust is not totally prevented, but dust cannot enter in an amount sufficient to interfere with the satisfactory operation of the equipment enclosed.

First digit 6 Complete protection
Complete protection against contact with live or moving parts inside the enclosure. Protected against the ingress of dust.

Protection against liquids

Second digit 0 No protection
No particular protection

Second digit 1 Protection against vertical water drops
Droplets of condensed water falling on the enclosure shall have no harmful effects.

Second digit 2 Protection against diagonal falling water drops
Protection against dripping liquids. Droplets of falling liquid shall have no harmful effect when the enclosure is tilted at any angle up to 15° from the vertical.

Second digit 3 Protection against spray water
Protection against dripping liquids. Water falling as rain at an angle equal to or smaller than 60° in respect to the vertical shall have no harmful effect.

Second digit 4 Protection against splashing
Liquid splashed from any direction shall have no harmful effect.

Second digit 5 Protection against water jets
Water projected by a nozzle from any direction under stated conditions shall have no harmful effect.

Second digit 6 Protection against flooding
Protection against conditions on ships decks (deck watertight equipment). Water from heavy seas shall not enter the enclosure under prescribed conditions[2].

Second digit 7 Protection against immersion in water
It shall not be possible for water to enter the enclosure under stated conditions of pressure and time[2].

Second digit 8 Protection against indefinite immersion
Protection against indefinite immersion in water.
Under specific pressure it shall not be possible for water to enter the enclosure[2]).

[2]) In certain cases water should not ingress. As required this is defined on the follow-on page of the unit in question.

Technical questionnaire to identify a suitable electric chain hoist

Company: _____ Date: _____

Contact: _____ e-Mail: _____

Phone: _____ Fax: _____

Details about intended use

_____

_____

_____

_____

_____

Required capacity

_____

Lifting height

_____

Ambient conditions

- ☐ normal
- ☐ humidity
- ☐ dust
- ☐ dirt
- ☐ particular temperatures _____ °C
- ☐ increased rel. humidity _____ %

Other

_____

_____

How long is the hoist in operation

_____ load cycles per hour

_____ hours per day

_____ days per week

_____ distance covered per lifting cycle

Unusual operating conditions that could be important for the choice and function of the electric chain hoist:

Type of load

- ☐ permanent
- ☐ changing
- ☐ shocks
- ☐ vibrations
- ☐ static

Trolley drive

- ☐ motor
- ☐ manual

Operating voltage

- ☐ 400 V
- ☐ 230 V
- ☐ 3-phase a.c.
- ☐ 1-phase a.c.

Power frequency

- ☐ 50 Hz
- ☐ 60 Hz

Protection

- ☐ IP 54
- ☐ other

Yale *CPV*

Electric chain hoist with suspension hook or with integrated trolley

Capacity 125 - 5000 kg

The electric chain hoist CPV combines modern design and technical innovation. A robust construction makes the series a versatile tool for professional applications.
The integrated limit switch for the highest and lowest hook position considerably extends the working life span of the slip clutch, motor and gearbox.

Features

- Increased operating safety through 42 V control voltage (low voltage control) and the main contactor.
- The integrated limit switch for the highest and lowest hook position considerably extends the service life of the slip clutch, motor and gearbox.
- Overload protection (slip clutch) in all CPV hoists is outside force flow to meet higher safety requirements.
- Electromagnetic spring pressure brake holds the load safely even in the event of power failure.
- Different suspension types available such as top hook, lug or an integrated trolley. A retro-fit to another type of suspension is possible.
- Any chain length (lifting height) as per customer order.
- Oil bath gearbox (or semifluid grease with CPV/F 2-8 and 5-4 as well as CPV 2-4 and 5-2) with helical gearing for particularly smooth service and enhanced lifetime.
- All-steel chain guide.
  The chain guide of the smallest hoist CPV/F 2-8 and 5-4 as well as CPV 2-4 and 5-2 is a thermoplastic (POM) chain guide that is integral with the housing.
- CPV series are protected up to IP 55
- 2 year warranty (excluding wear parts).

COMPLETE SERIES CPV

CAPACITIES 125 - 5000 KG

WITH

SUSPENSION HOOK AS STANDARD,

SUSPENSION LUG AS AN OPTION,

PUSH, GEARED OR ELECTRIC TROLLEY

INFO

Festooned cable systems please see pages 160 - 161.

Yale hoists and trolleys are not designed for passenger elevation applications and must not be used for this purpose.

Optional

- Other operating and control voltages.
- Flexible chain containers.
- Power supply cables, CEE plugs with phase changing switch.
- Radio remote controls, also acc. to DIN EN 13849-1, PL „d“.
- Pluggable control pendants.
- Wall mounted controls.
- Rotary limit switch as a back-up to standard limit switches.
- Frequency controllers, stepless and ramp controls.
- Suspensions 90° turned.
- Thermal sensors.

Optional:
Radio remote control

Optional:
with suspension lug

Yale *CPV*

Further standards

CPV „Quick Delivery“ 24 h programme

Capacity 250 - 1000 kg

Features

- Top suspension hook
- Lifting height 6 m
- With chain container

SPECIAL MODEL CPV
“QUICK DELIVERY”
THE HOIST CAN BE SHIPPED EX CMCO WUPPERTAL WITHIN 24 HOURS

Technical data CPVF - 24 h “Quick Delivery” programme

Model	Art.-No.	Capacity kg	Number of chain falls	Lifting speed in m/min main lift	fine lift
CPVF 2-8	192052434	250	1	8	2
CPVF 5-8	192052435	500	1	8	2
CPVF 10-8	192052436	1000	1	8	2

Technical data CPV/CPVF - 400 V, 3 Ph, 50 Hz

Capacity kg	Model	Number of chain falls	Chain dimensions d x p mm	Classification FEM/ISO	Lifting speed main lift m/min	Lifting speed fine lift m/min	Hoist motor rating kW	Motor rating ED %	Weight at standard lift (3 m) [1] suspension lug kg	Weight at standard lift (3 m) [1] push trolley[2] kg	Weight at standard lift (3 m) [1] electric trolley[3] kg
125	**CPV 2-8**	1	4 x 12.2	3 m/M6	8	–	0.37	75	17	26	31
125	**CPVF 2-8**	1	4 x 12.2	3 m/M6	8	2	0.37/0.09	50/25	18	27	32
250	**CPV 2-8**	1	4 x 12.2	1 Am/M4	8	–	0.37	50	17	26	31
250	**CPVF 2-8**	1	4 x 12.2	1 Am/M4	8	2	0.37/0.09	33/17	18	27	32
250	**CPVF 2-18**	1	5 x15.1	1 Am/M4	18	4.5	0.75/0.18	33/17	27	42	50
320	**CPV 5-8**	1	5 x 15.1	3 m/M6	8	–	0.75	67	26	41	49
320	**CPVF 5-8**	1	5 x 15.1	3 m/M6	8	2	0.75/0.18	45/22	27	42	50
500	**CPV 5-4**	2	4 x 12.2	1 Am/M4	4	–	0.37	50	20	29	34
500	**CPVF 5-4**	2	4 x 12.2	1 Am/M4	4	1	0.37/0.09	33/17	21	30	35
500	**CPV 5-8**	1	5 x 15.1	1 Am/M4	8	–	0.75	50	26	41	49
500	**CPVF 5-8**	1	5 x 15.1	1 Am/M4	8	2	0.75/0.18	33/17	27	42	50
500	**CPVF 5-18**	1	7.1 x 20.5	1 Am/M4	18	4.5	1.5/0.37	33/17	59	78	85
630	**CPV 10-8**	1	7.1 x 20.5	3 m/M6	8	–	1.5	67	58	77	84
630	**CPVF 10-8**	1	7.1 x 20.5	3 m/M6	8	2	1.5/0.37	45/22	59	78	85
1000	**CPV 10-4**	2	5 x 15.1	1 Am/M4	4	–	0.75	50	28	43	51
1000	**CPVF 10-4**	2	5 x 15.1	1 Am/M4	4	1	0.75/0.18	33/17	29	44	52
1000	**CPV 10-8**	1	7.1 x 20.5	1 Am/M4	8	–	1.5	50	58	77	84
1000	**CPVF 10-8**	1	7.1 x 20.5	1 Am/M4	8	2	1.5/0.37	33/17	59	78	85
1500	**CPV 20-4**	2	7.1 x 20.5	2 m/M5	4	–	1.5	62	63	82	89
1500	**CPVF 20-4**	2	7.1 x 20.5	2 m/M5	4	1	1.5/0.37	41/21	64	83	90
2000	**CPV 20-4**	2	7.1 x 20.5	1 Am/M4	4	–	1.5	50	63	82	89
2000	**CPVF 20-4**	2	7.1 x 20.5	1 Am/M4	4	1	1.5/0.37	33/17	64	83	90
2000	**CPVF 25-8**	1	11.3 x 31	2 m/M5	8	2	3.6/0.9	39/20	85	147	161
2500	**CPVF 25-8**	1	11.3 x 31	1 Am/M4	8	2	3.6/0.9	33/17	85	147	161
3200	**CPVF 50-4**	2	11.3 x 31	3 m/M6	4	1	3.6/0.9	44/22	98	160	174
5000	**CPVF 50-4**	2	11.3 x 31	1 Am/M4	4	1	3.6/0.9	33/17	98	160	174

CPV - 230 V, 1 PH, 50 HZ

125	**CPV 2-4**	1	4 x 12.2	3 m/M6	4	–	0.37	35
250	**CPV 2-4**	1	4 x 12.2	1 Bm/M3	4	–	0.37	25
500	**CPV 5-2**	2	4 x 12.2	1 Bm/M3	2	–	0.37	25
500	**CPV 5-8**	1	5 x 15.1	1 Bm/M3	8	–	1.0	25
1.000	**CPV 10-4**	2	5 x 15.1	1 Bm/M3	4	–	1.0	25

[1] Other lifting heights on request. [2] For trolleys type A and B: Additional weight for geared trolley (VTG): 2.5 kg
[3] For electric trolley with 2 speeds (VTEF) +2.0 kg

Depicted chain container optionally available.

Trolleys

Suitable for	All trolleys: Capacity of the trolley kg	Size	Beam flange width b mm	Beam flange thickness t max. mm	Curve radius min. m	Electric trolley: Travel speed m/min at 50 Hz	Motor kW at 50 Hz
CPV/CPVF 2-8/5-4, CPV 2-4/5-2	500	A	58 - 180	19	0.9	11 or 18	0.09
CPV/CPVF 2-8/5-4, CPV 2-4/5-2	500	B	180 - 300	19	0.9	11 or 18	0.09
CPV/CPVF 5-8/10-4, CPVF 2-18	1000	A	58 - 180	19	0.9	18 or 18/4.5 [1]	0.18 or 0.18/0.06
CPV/CPVF 5-8/10-4, CPVF 2-18	1000	B	180 - 300	19	0.9	18 or 18/4.5 [1]	0.18 or 0.18/0.06
CPV/CPVF 10-8/20-4, CPVF 5-18	2000	A	58 - 180	19	1.15	18 or 18/4.5 [1]	0.18 or 0.18/0.06
CPV/CPVF 10-8/20-4, CPVF 5-18	2000	B	180 - 300	19	1.15	18 or 18/4.5 [1]	0.18 or 0.18/0.06
CPVF 25-8/50-4	5000	A	98 - 180	27	2.0	11 or 11/2.8	0.37 or 0.3/0.09
CPVF 25-8/50-4	5000	B	180 - 300	27	1.8	11 or 11/2.8	0.37 or 0.3/0.09

[1] Alternatively 11 or 11/2.8 m/min

Yale *CPV*

Options and features for applications

FOR CORROSIVE ENVIRONMENT & FOOD INDUSTRY

- Stainless steel load chains.
- Stainless steel load hooks for single fall hoists.
- Zinc- or copper- bottom blocks for double fall hoists.
- Zinc plated trolleys and/or 2-component topcoat.
- Food industry approved gearbox lubricants and grease (H1).
- Textile rain coats for hoists and trolleys.

FOR SIMULTANEOUS LIFTING

Yale offers solutions for lifting loads with two or more electric chain hoists simultaneously. Depending on the customer's application, the hoist system must meet various and sometimes very demanding requirements.

Please contact Columbus McKinnon to find a suitable solution.

- Radio or cable controls
- Movement selection: single or group movement
- On trolleys or as point hoists
- Coupled trolleys

FOR CRANE BUILDING

- Beam locking device for trolleys
- Rubber buffers for trolleys
- Trolley travel end buffer stops
- 90° suspension on trolley
- Counter for operating hours
- Trolley travel end limit switches
- Signal horn or lamp for crane applications
- Festoon cable systems or other power supply
- Suspensions for light crane systems
- Crane operation pendants

Dimensions CPV/CPVF

Model	CPV/CPVF 2-8 CPV 2-4	CPV/CPVF 5-4 CPV 5-2	CPVF 2-18 CPV/CPVF 5-8	CPV/CPVF 10-4	CPVF 5-18 CPV/CPVF 10-8	CPV/CPVF 20-4	CPVF 25-8	CPVF 50-4
A, mm	327	363	357	430	431	528	514	658
A1, mm	163	163	196	196	234	234	288	288
A2 (dimension with chain container), mm								
- Size I (for lifting height, m)	343 (15 m)	343 (7.5 m)	476 (10 m)	476 (5 m)	564 (12 m)	564 (6 m)	580 (13 m)	580 (6 m)
- Size II (for lifting height, m)	413 (32 m)	413 (16 m)	526 (22 m)	526 (11 m)	644 (18 m)	644 (9 m)	764 (25 m)	764 (12 m)
- Size III (for lifting height, m)	483 (52 m)	483 (26 m)	606 (40 m)	606 (20 m)	734 (25 m)	734 (12 m)	854 (30 m)	854 (15 m)
- Size IV (for lifting height, m)	–	–	798 (64 m)	798 (32 m)	934 (40 m)	934 (20 m)	–	–
B, mm	23	23	22	29	29	37	37	37
B1, mm	12	12	15	15	20	20	33	33
C, mm	30	30	29	35	35	40	46	46
C1, mm	30	30	38	38	45	45	71	71
C2, mm	105	105	105	105	154	154	194	194
D, mm	16	16	15	21	21	26	35	35
D1, mm	12	12	15	15	15	15	25	25
E, mm	205	205	277	277	326	326	409	409
G, mm	106	126	120	144	140	173	179	179
G1 (size I), mm	124	124	142	166	175	208	264	264
G1 (size II), mm	124	124	162	186	175	208	264	264
G1 (size III), mm	124	124	162	186	175	208	265	265
G1 (size IV), mm	124	124	162	186	175	208	–	–
H, mm	99	79	157	133	186	154	230	230
H2, mm	92	72	158	158	186	186	230	180
K, mm	215	215	208	208	285	285	335	335
M (size I), mm	157	157	162	162	209	209	300	300
M (size II), mm	157	157	197	197	209	209	300	300
M (size III), mm	157	157	197	197	209	209	301	301
M (size IV), mm	157	157	197	197	209	209	–	–
N [1], mm	159	159	219	219	274	274	299	299

[1] for 230 V, 1 Ph, 50 Hz: approx. +35 mm

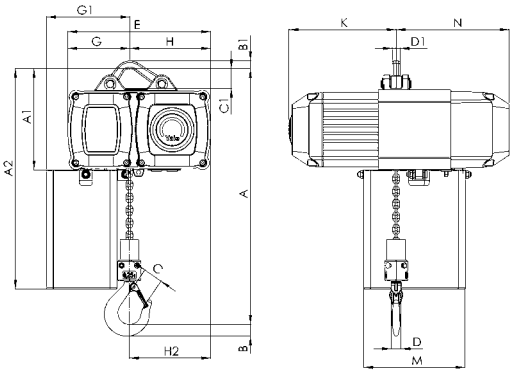

CPV/CPVF
with suspension lug, 125 - 2500 kg, single fall

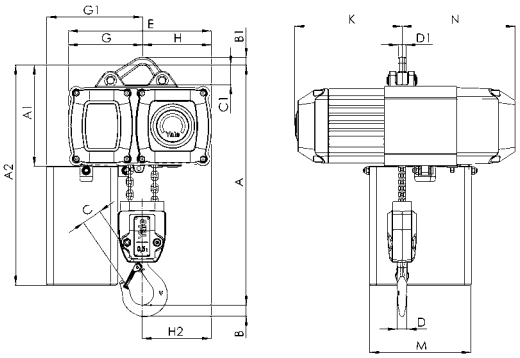

CPV/CPVF
with suspension lug, 500 - 5000 kg, double fall

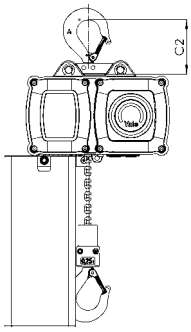

CPV/CPVF
with suspension lug, 250 - 2500 kg

Dimensions CPV/CPVF

Model	CPV/CPVF 2-8 CPV 2-4	CPV/CPVF 5-4 CPV 5-2	CPVF 2-18 CPV/CPVF 5-8	CPV/CPVF 10-4	CPVF 5-18 CPV/CPVF 10-8	CPV/CPVF 20-4	CPVF 25-8	CPVF 50-4
A3, mm	199	199	228	228	263	263	339	339
A4 (dimension with chain container), mm								
- Size I (for lift-height, m)	379 (15 m)	379 (7.5 m)	508 (10 m)	508 (5 m)	593 (12 m)	593 (6 m)	631 (13 m)	631 (6 m)
- Size II (for lift-height, m)	449 (32 m)	449 (16 m)	558 (22 m)	558 (11 m)	673 (18 m)	673 (9 m)	815 (25 m)	815 (12 m)
- Size III (for lift-height, m)	519 (52 m)	519 (26 m)	638 (40 m)	638 (20 m)	768 (25 m)	768 (12 m)	905 (30 m)	905 (15 m)
- Size IV (for lift-height, m)	–	–	830 (64 m)	830 (32 m)	968 (40 m)	968 (20 m)	–	–
A5, mm	365	401	389	462	460	558	648	738
b, mm	A = 58 - 180 B = 180 - 300	A = 58 - 180 B = 180 - 300	A = 58 - 180 B = 180 - 300	A = 58 - 180 B = 180 - 300	A = 58 - 180 B = 180 - 300	A = 58 - 180 B = 180 - 300	A = 98 - 180 B = 180 - 300	A = 98 - 180 B = 180 - 300
H1, mm	25	25	24	24	23	23	30	30
H3, mm	113	113	129	129	129	129	178	178
H4 (VTG), mm	95	95	95	95	95	95	149	149
H4 (VTE), mm	142	142	142	142	142	142	121	121
I (Push trolley), mm	72	72	72	72	96	96	142	142
I (Geared trolley), mm	76	76	77	77	98	98	149	149
L (VTP/VTG), mm	310	310	310	310	360	360	525	525
L1, mm	130	130	130	130	150	150	209	209
L2 (VTE), mm	255	255	255	255	255	255	292	292
L2 (VTEF), mm	222	222	263	263	263	263	296	296
L3, mm	135	135	155	155	180	180	263	263
L4, mm	131	111	173	161	203	203	258	208
O, mm	60	60	60	60	80	80	125	125
P, mm	171	171	180	180	180	180	172	172
P1, mm	236	236	246	246	246	246	233	233
S, mm	b + 50	b + 50	b + 50	b + 50	b + 54	b + 54	b + 70	b + 70
T, mm	94	94	94	94	94	94	94	94
tmax., mm	12	12	19	19	19	19	27	27

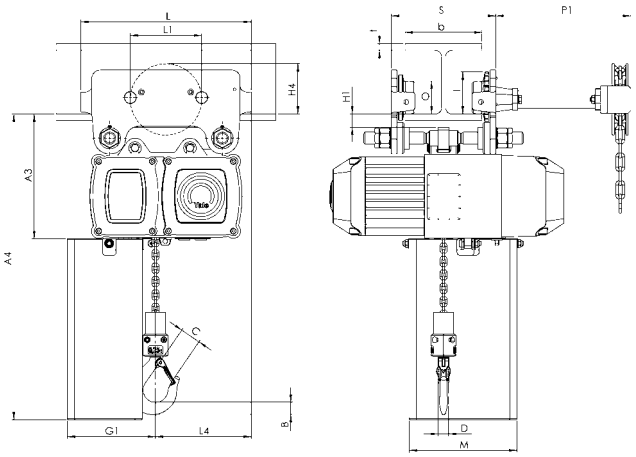

CPV/CPVF
with integrated manual push or geared trolley

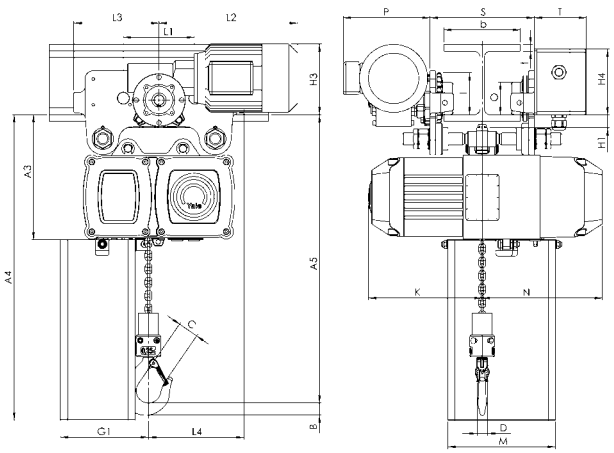

CPV/CPVF
with integrated electric trolley

The delivered product may differ from the product shown in the image.

CPEF
Electric chain hoist with suspension lug or with integrated trolley

Capacity 1600 - 7500 kg

The CPEF series is a range of high quality products for professional applications. They are highly efficient and engineered for a long working life. The hoists are composed of three main component parts which makes service easy and inexpensive.

Features

- Classification 1 Am/M4, except CPEF 20-8, CPEF 30-5 und CPEF 40-4 with classification 1 Bm/M3.
- 42 V low voltage control
- 2 year warranty (excluding wear parts) as well as a lifetime lubricated gear box.
- Motor fitted with a bimetallic thermal protection.
- The heavy duty squirrel cage motor has an adjustable spring pressure brake that holds the load secure even in the event of a power failure.
- Standard operating voltage: Euro-voltage 400 V, 3 Ph, 50 Hz.
- Motor protected to IP 55, insulation class F, against ingress of dust and water jets.
- Encapsulated pendant control protected to IP 65, against ingress of dust and water jets.
- The 5-pocket load chain sheave, manufactured from wear resistant case hardening steel, is matched perfectly to the load chain to guarantee smooth and precise chain motion.
- The standard, oil bath lubricated planetary gearbox is particularly smooth running.
- Forged suspension and load hooks are made from non-aging, high tensile steel and fitted with robust safety latches.
- The standard case hardened and zinc-plated link chain is matched perfectly to the load chain to guarantee smooth and precise chain motion.
  All requirements of national and international standards and regulations are fulfilled.

Optional

- Stainless steel load chain.
- Suspension hook rotated 90°.
- Flexible chain container.
- Other operating voltages
- Limit switches for highest and lowest hook positions (in combination with low voltage control).
- Radio remote control
- Control for synchronized operation of several hoists.
- Manual and electric trolleys.
- Festooned cable system or conductor rail system

CPEF 100-2
Electric chain hoist with suspension hook or with integrated trolley

Capacity 10000 kg

The model CPEF 100-2 consists of two CPEF 50-2 units. They are connected by a framework.
Suspension hook , geared or electric trolleys are available. Integrated limit switches for highest and lowest hook positions are standard. 42 V low voltage control as standard.

Optional

- Stainless steel load chain.
- Flexible chain container.
- Other operating voltages
- Motor with stainless steel brake.
- Radio remote control
- Festooned cable system or conductor rail system

INFO

The units are certified by the employer's liability insurance association (Berufsgenossenschaft) and fulfil the requirements of the machinery directive 2006/42/EG.

Festooned cable systems please see pages 160 - 161.

The delivered product may differ from the product shown in the image.

5-pocket load chain
sheave machined for smooth, precise chain motion.

Universal connection
to suspension hook, trolley or steel structures.

Double fall bottom block
for capacities between 3200 up to 5000 kg.

Hoist connected directly to trolley
with electric drive. Manual pull and geared trolleys also available.

Optional:
Flexible chain container made from wear resistant textile fabric.

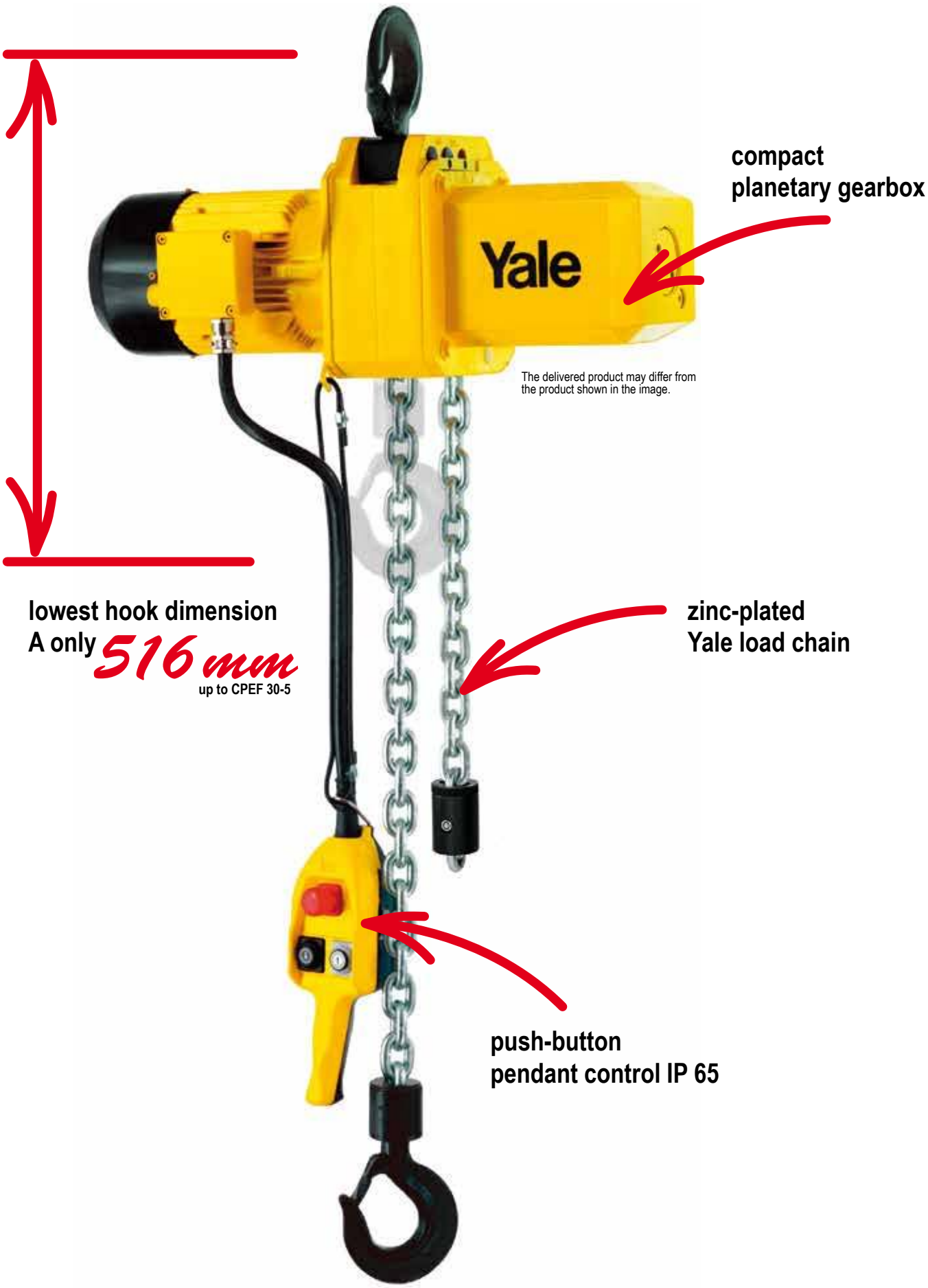
compact
planetary gearbox
Yale
The delivered product may differ from the product shown in the image.
lowest hook dimension
A only 516 mm
up to CPEF 30-5
zinc-plated
Yale load chain
push-button
pendant control IP 65

Technical data CPEF - 400 V, 3 Ph, 50 Hz

Model	Art.-No. CPEF with suspension hook	Capacity in kg/ Number of chain falls	Chain dimensions d x p mm	Classification FEM/ISO	Lifting speed main lift m/min	Lifting speed fine lift m/min	Hoist motor rating kW	Motor rating ED %
CPEF 16-8	N06000246	1600/1	11.3 x 31	1 Am/M4	8	2	2.3/0.58	40/20
CPEF 20-8	N06000248	2000/1	11.3 x 31	1 Bm/M3	8	2	2.8/0.7	25/15
CPEF 25-5	N06000250	2500/1	11.3 x 31	1 Am/M4	5	1.25	2.3/0.58	40/20
CPEF 30-5	N06000252	3000/1	11.3 x 31	1 Bm/M3	5	1.25	2.8/0.7	25/15
CPEF 32-4	N06000254	3200/2	11.3 x 31	1 Am/M4	4	1	2.3/0.58	40/20
CPEF 40-4	N06000256	4000/2	11.3 x 31	1 Bm/M3	4	1	2.8/0.7	25/15
CPEF 50-2	N06000258	5000/2	11.3 x 31	1 Am/M4	2.5	0.6	2.3/0.58	40/20
CPEF 75-1,6	N06000278	7500/3	11.3 x 31	1 Am/M4	1.6	0.4	2.8/0.58	40/20
CPEF 100-2	N06041607	10000/4	11.3 x 31	1 Am/M4	2.5	0.6	2 x 2.3/0.58	40/20

Model	Weight at standard lift (3 m)[1] Suspension hook kg	Manual geared trolley kg	Electric trolley kg
CPEF 16-8	93	159	171
CPEF 20-8	93	159	171
CPEF 25-5	93	159	171
CPEF 30-5	93	159	171
CPEF 32-4	112	178	189
CPEF 40-4	112	178	189
CPEF 50-2	112	178	189
CPEF 75-1,6	226	326	348
CPEF 100-2	287	390	413

[1] Other lifting heights on request.

The delivered product may differ from the product shown in the image.

Technical data trolleys

Capacity kg	Size	Beam flange width b mm	Beam flange thickness t max. mm	Curve radius min. m	Electric trolley travel speed m/min at 50 Hz	Electric trolley motor kW at 50 Hz
1600 - 5000	A	98 - 180	27	2.0	11/2.8	0.3/0.09
1600 - 5000	B	180 - 300	27	1.8	11/2.8	0.3/0.09
7500 - 10000	B	125 - 310	40	1.8	5/1.25	0.55/0.12

INFO

Festooned cable systems please see pages 160 - 161.

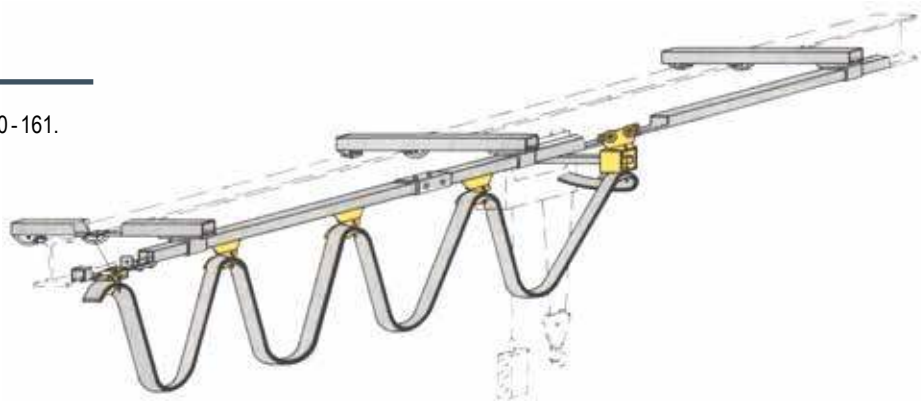

Dimensions CPE[1]/CPEF

Model	CPE[1]/CPEF 16-8	CPE[1]/CPEF 20-8	CPE[1]/CPEF 25-5	CPE[1]/CPEF 30-5	CPE[1]/CPEF 32-4	CPE[1]/CPEF 40-4	CPE[1]/CPEF 50-2	CPE[1]/CPEF 75-1,6	CPE[1]/CPEF 100-2
A, mm	516	516	516	516	681	681	681	950	1068
A1, mm	286	286	286	286	428	428	428	479	651
A2 (13 m), mm	430	430	430	430	430	430	430	–	–
A2 (21 m), mm	530	530	530	530	530	530	530	530	555
B, mm	35	35	35	35	45	45	45	60	60
C, mm	37	37	37	37	46	46	46	52	52
D, mm	24	24	24	24	30	30	30	40/45	40/45
E, mm	45/50	45/50	45/50	45/50	45/50	45/50	45/50	–	–
F1, mm	160	160	160	160	160	160	160	160	160
F2, mm	184/195	184/195	184/195	184/195	184/195	184/195	184/195	184/195	184/195
G, mm	220	220	220	220	220	220	220	220	–
G1, mm	180	180	180	180	140	140	140	293/298	340/345
G2 (13 m), mm	257	257	257	257	218	218	218	–	–
G2 (21 m), mm	277	277	277	277	238	238	238	345	408
H1, mm	110	110	110	110	110	110	110	110	135
H2, mm	135	135	135	135	135	135	135	307	256
K1, mm	100	100	100	100	100	100	100	92	92
K2, mm	51	51	51	51	51	51	51	62	62
M, mm	50	50	50	50	10	10	10	138	–
N, mm	105/110	105/110	105/110	105/110	145/150	145/150	145/150	136	390
Q1, mm	280	280	280	280	280	280	280	280	280
Q2, mm	382/438	382/438	382/438	382/438	382/438	382/438	382/438	382/438	382/438

[1] The model CPE (single speed hoist) is available on request. Please consider the deviating motor dimensions in the above table.

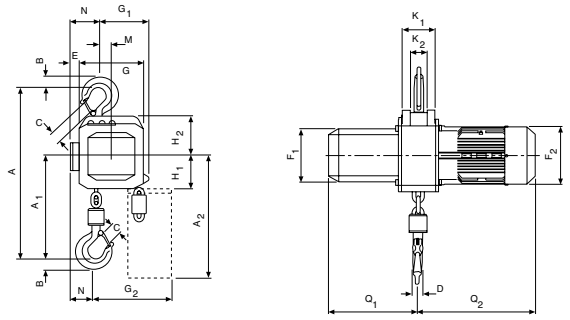

CPE[1]/CPEF with suspension hook, 1600 - 3000 kg, single fall

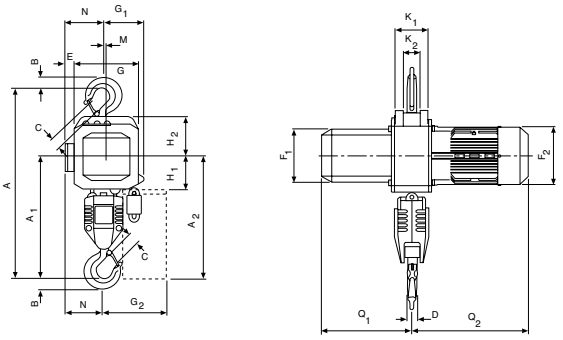

CPE[1]/CPEF with suspension hook, 3200 - 5000 kg, double fall

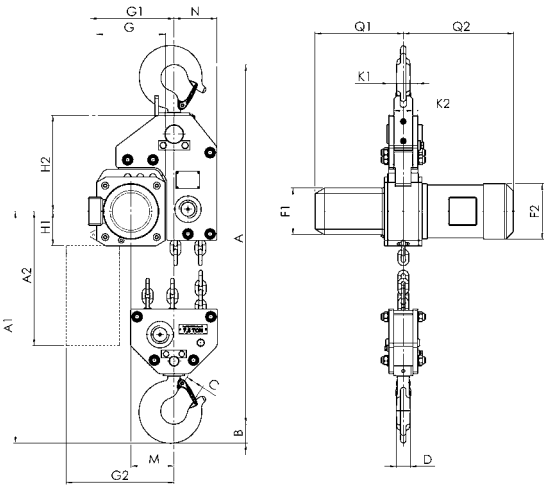

CPE[1]/CPEF 75-1,6 with suspension hook, 7500 kg

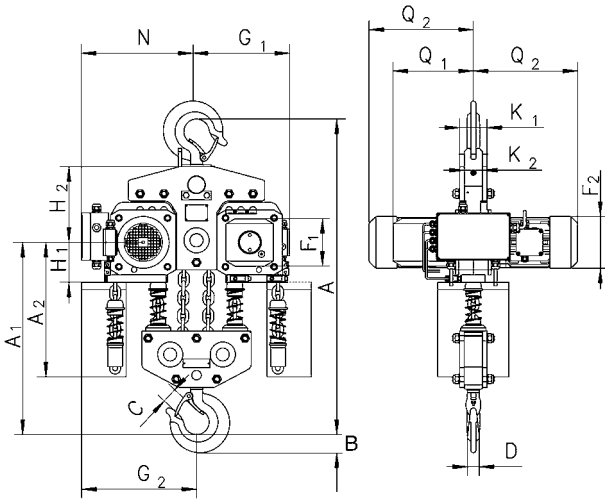

CPE[1]/CPEF 100-2 with suspension hook, 10000 kg

Dimensions CPEF

Model	CPEF 16-8	CPEF 20-8	CPEF 25-5	CPEF 30-5	CPEF 32-4	CPEF 40-4	CPEF 50-2	CPEF 75-1,6	CPEF 100-2
A3, mm	121	121	121	121	121	121	121	–	110
A4, mm	465	465	465	465	615	615	615	855	965
A5, mm	298	298	298	298	298	298	298	477	450
A6, mm	178	178	178	178	178	178	178	–	170
b, mm	A = 98 - 180/ B = 180 - 300	A = 98 - 180/ B = 180 - 300	A = 98 - 180/ B = 180 - 300	A = 98 - 180/ B = 180 - 300	A = 98 - 180/ B = 180 - 300	A = 98 - 180/ B = 180 - 300	A = 98 - 180/ B = 180 - 300	125 - 310	125 - 310
F, mm	150	150	150	150	150	150	150	113	113
I, mm	148.5	148.5	148.5	148.5	148.5	148.5	148.5	170	170
L1, mm	209	209	209	209	209	209	209	200	200
L2, mm	262.5	262.5	262.5	262.5	262.5	262.5	262.5	215	215
L3 (VTE), mm	292	292	292	292	292	292	292	–	335
L3 (VTEF), mm	296	296	296	296	296	296	296	–	335
L4, mm	213	213	213	213	253	253	253	215	390
L5, mm	312	312	312	312	272	272	272	215	215
L6 (VTE), mm	342	342	342	342	342	342	342	–	–
L6 (VTEF), mm	346	346	346	346	306	306	306	–	–
O, mm	125	125	125	125	125	125	125	150	150
P (VTE), mm	197	197	197	197	197	197	197	–	273
P (VTEF), mm	205	205	205	205	205	205	205	–	280
P1, mm	229	229	229	229	229	229	229	–	110
S, mm	b + 70	b + 70	b + 70	b + 70	b + 70	b + 70	b + 70	b + 98	b + 98
T, mm	94	94	94	94	94	94	94	–	94
tmax., mm	27	27	27	27	27	27	27	40	40

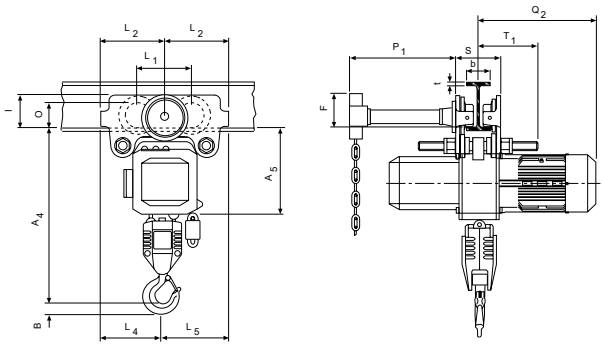

CPE[1]/CPEF with integrated manual geared trolley

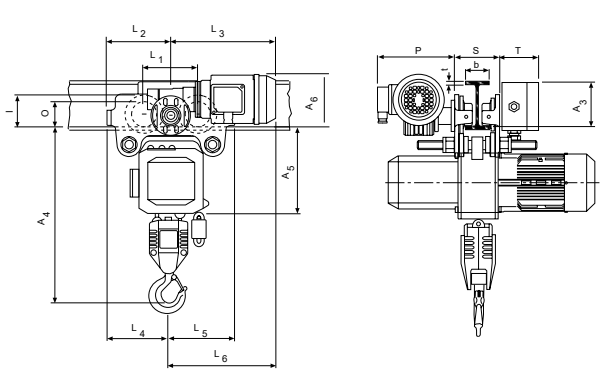

CPE[1]/CPEF with integrated electric trolley

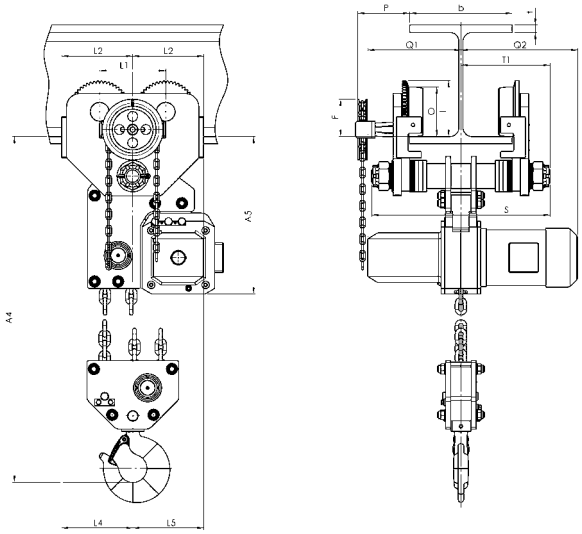

CPE[1]/CPEF with integrated geared or electric trolley, 7500 kg

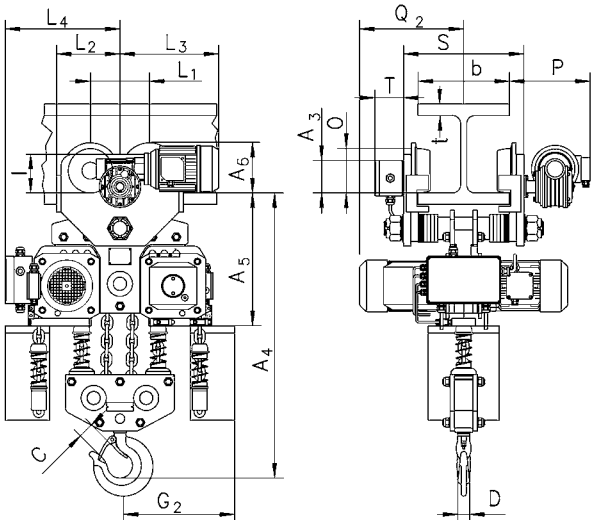

CPE[1]/CPEF with integrated electric trolley, 10000 kg

ST chain hoist

Users, crane manufacturers and systems manufacturers appreciate the robust classic which proves itself in operation day after day. It is powerful, reliable and undemanding as regards maintenance and power consumption. The supervised series production of the standard components brings you economic advantages. And in conjunction with the precise manufacture of off-standard components, the ST chain hoist is an acknowledged top level quality product.

The modular system permits numerous combinations of the sub-assemblies to achieve your individual solutions.
The ST series from STAHL CraneSystems is available in 6 load capacity variants for the load capacity range from 125 kg to 6300 kg. The chain hoists can be used as stationary models with suspension hook or eye, with rigid suspension or with a push trolley. Or when completed by an electric trolley, they are mounted on standard cranes, off-standard cranes or in systems manufacture.

The technical highlight that makes the ST chain hoist one of the safest around is its direct suspension from the solid cast iron chain guide. The chain guide integrates the load-bearing components in one component.

The STF chain hoists variant is equipped with frequency inverters from Magnetek as standard. This ensures precise, stepless lifting and travel with reliable feedback. Various off-standard designs are available for use in particular conditions. Two constructions optimise the effective hook height of all chain hoist models if required. The headroom of the short headroom trolley and extra short headroom trolley is reduced by 33 % and over 60 % respectively. For exceptional requirements, our experts in the engineering department will develop suitable customised solutions. Even in explosive atmospheres you do not have to manage without the ST chain hoist. On request, nearly the entire chain hoist programme is available in explosion-protected design for Zone 1, Zone 21 and Zone 22.

CONTACT

STAHL CraneSystems GmbH, Daimlerstr. 6, 74653 Künzelsau
T +49 7940 128-0, F +49 7940 55665, info.scs@stahlcranes.com

ST30

STK extra short headroom trolley

If you do not want to lose even a millimetre of lifting height, the STK extra short headroom trolley is just the thing for you.

The construction of the short headroom trolley itself saves a tremendous amount of space. The body of the chain hoist is mounted at an angle, meaning that no return sheave is required. This reduces the headroom by 33 %. The extra short headroom trolley with its headroom reduced by 60 %, by contrast, achieves maximum hook paths, which is particularly beneficial in extremely low-ceilinged rooms. The extremely short distance from the underside of the beam to the bed of the hook is just 210 mm at a load capacity of 5000 kg and even just 185 mm at a load capacity of 3200 kg. The chain hoists used here, mounted vertically, are based on the standard ST chain hoist programme from STAHL CraneSystems.

The innovative, patented chain guide is unique. Two separate, synchronously running chains act on a bottom hook block. The load is lifted and precisely positioned without swinging or vibration.

- Very compact dimensions for maximum use of headroom
- Specially developed for low-ceilinged rooms
- Low deadweight and low maintenance
- Load is lifted steadily and without swinging
- Trolleys with no projecting edges for steady cross travel
- Optionally with frequency inverters for lifting and travel and radio remote controls from Magnetek
- Optionally permanent electronic monitoring of the suspended loads
- Optionally available in explosion-protected design

STD dual chain hoist

The dual chain hoist is an off-standard development for long goods and loads which need to be picked up at two points. It has two load chains which are driven in synch by a single hoist motor. The distance between the hooks can be selected to suit the goods to be transported. The design means that the two running hooks running in synch lift and transport the load without dangerous tilting.

Due to the low headroom construction it is ideal where headroom is restricted. Depending on the requirements there are versions where the load hooks are either to both the right and left or only on one side of the chain hoist. For stationary use, the chain hoist, adapted to the width of the load, is mounted rigidly on a substructure. In combination with an electric trolley, the chain hoist becomes mobile.

The STD Vario dual chain hoist with its electrically adjustable distance between hooks allows goods with unequal loads or different lengths to be lifted without any problems, transported safely and positioned precisely.

- Low space requirement permitting maximum height of lift
- Two hook lead-offs running in synch on one hoist
- Synchronous lifting even with uneven loading, no tilting of the load
- Individually adapted to width of load
- Optionally with frequency inverters for lifting and travel and radio remote controls from Magnetek
- Optionally permanent electronic monitoring of the suspended loads
- Optionally available in explosion-protected design

STF chain hoist

The STF chain hoist combines the proven technology of the ST chain hoist with the advantages of the Magnetek IMPULSE® frequency inverters.

Equipped with the IMPULSE®·G+ Mini as standard, the STF chain hoist not only allows precise movements, but also provides valuable diagnostic and performance information such as the current status of the chain hoist via data exchange with IoT networks. The IMPULSE·G+ Mini frequency inverter can be connected to fieldbus systems such as Modbus, Profibus or Ethernet, making it an important step towards Industry 4.0.

The STF chain hoist is equipped with overspeed protection, standstill monitoring (SRC rotation control) and 1024 PPR tachometer. This ensures greater safety for the operator and less stress on structural, mechanical and control components. The fast programmability of the frequency inverter, also offers a safe, highly reliable and simple plug-and-play application.

- Standard with Magnetek IMPULSE·G+ Mini
- Optional frequency-controlled drive
- Simple connection to IoT networks
- Increased safety through overspeed protection and standstill monitoring (SRC rotation control)
- 1024 PPR tachometer for reliable feedback in harsh environments
- Simple plug-and-play application
- IP66 protection available as an option
- Braking resistance also optionally available in IP67

Industry-specific applications

Special industries place special hygienic and mechanical demands on the work equipment used there and thus also on crane systems and chain hoists.

The standard components can for example be adapted to many requirements in the food sector by means of special paints and biodegradable lubricants with food approval or by design in protection class IP66. The chain hoist can be used in clean rooms or in medical technology by using trolleys and load chains made of stainless steel, acid and alkali-resistant components or drip pans under the hoist and trolleys.

The extra short headroom trolley and the dual chain hoist are suitable for complex, space-saving solutions, for example in cold rooms or big bag discharge systems. All components are also available in explosion-protected versions – so even hazardous materials such as flour, grain or sugar can be transported safely.

- IP66 protection for hoists and controls
- Anti-condensation heaters against corrosion
- Stainless steel components
- Acid and alkali-resistant components
- Special paints and lubricants
- Use in harsh environments, e.g. in foundries
- Drip pans and trays
- Low-wear electronic swing damping
- Synchronous chain guides and synchronous lifting
- Explosion-protected versions

ST
Electric chain hoist with suspension hook or with integrated trolley

Capacity 250 - 2000 kg

Users, crane manufacturers and systems manufacturers appreciate the robust classic which proves itself in operation day after day. It is powerful, reliable and undemanding as regards maintenance and power consumption. The supervised series production of the standard components brings you economic advantages. And in conjunction with the precise manufacture of off-standard components, the ST chain hoist is an acknowledged top level quality product.

The modular system permits numerous combinations of the sub-assemblies to achieve your individual solutions. The ST series from STAHL CraneSystems is available in 6 load capacity variants for the load capacity range from 125 kg to 6300 kg. The chain hoists can be used as stationary models with suspension hook or eye, with rigid suspension or with a push trolley. Or when completed by an electric trolley, they are mounted on standard cranes, off-standard cranes or in systems manufacture. The technical highlight that makes the patented ST chain hoist one of the safest around is its direct suspension from the solid cast iron chain guide.

Features

- Extensive chain hoist range for lifting capacities from 125 kg to 6300 kg
- Suspension directly from the chain guide of solid cast iron
- Easy inspection and maintenance of the chain drive thanks to overmounted drive shaft
- Optionally with frequency inverters for lifting and travel from Magnetek
- Extremely short and compact construction ensures that space can be utilised to the maximum
- High ISO classification according to FEM/ISO standards
- Optionally available in explosion-protected design complying with ATEX and IECEx

INFO

STAHL CraneSystems hoists are not designed for passenger elevation applications and must not be used for this purpose.

Technical data ST - with suspension hook

Model	Art.-No.	Capacity in kg/ Number of chain falls	Lifting speed m/min	Classification FEM/ISO	Motor rating ED %	Hoist motor rating kW
ST 0502-8/2 [1]	A70109458	250 1/1	8/2	1Am/M4	35/15	0.4/0.1
ST 0502-8/2 [1]	A70109527	500 2/1	4/1	1Am/M4	35/15	0.4/0.1
ST 1005-8/2 [1]	A70109530	500 1/1	8/2	1Am/M4	40/20	0.8/0.2
ST 1005-8/2 [1]	A70109532	1000 2/1	4/1	1Am/M4	40/20	0.8/0.2
ST 2010-8/2 [2]	–	1000 1/1	8/2	2m/M5	40/20	1.5/0.37
ST 2010-8/2 [2]	–	2000 2/1	4/1	2m/M5	40/20	1.5/0.37

Technical data ST - with push trolley

Model	Art.-No.	Capacity in kg/ Number of chain falls	Lifting speed m/min	Classification FEM/ISO	Motor rating ED %	Hoist motor rating kW	Flange width mm
ST 0502-8/2 [1]	A70109528	250 1/1	8/2	1Am/M4	35/15	0.4/0.1	42-180
ST 0502-8/2 [1]	A70109528	500 2/1	4/1	1Am/M4	35/15	0.4/0.1	42-180
ST 1005-8/2 [2]	–	500 1/1	8/2	1Am/M4	40/20	0.8/0.2	42-180
ST 1005-8/2 [2]	–	1000 2/1	4/1	1Am/M4	40/20	0.8/0.2	58-300
ST 2010-8/2 [2]	–	1000 1/1	8/2	2m/M5	40/20	1.5/0.37	58-300
ST 2010-8/2 [2]	–	2000 2/1	4/1	2m/M5	40/20	1.5/0.37	66-300

Technical data ST - with geared trolley

Model	Art.-No.	Capacity in kg/ Number of chain falls	Lifting speed m/min	Classification FEM/ISO	Motor rating ED %	Hoist motor rating kW	Flange width mm	Travel speed m/min
ST 0502-8/2 [2]	–	250 1/1	8/2	1Am/M4	35/15	0.4/0.1	42-180	20/5
ST 0502-8/2 [1]	A70109540	500 2/1	4/1	1Am/M4	35/15	0.4/0.1	42-180	20/5
ST 1005-8/2 [2]	–	500 1/1	8/2	1Am/M4	40/20	0.8/0.2	42-180	20/5
ST 1005-8/2 [1]	A70109538	1000 2/1	4/1	1Am/M4	40/20	0.8/0.2	58-300	20/5
ST 2010-8/2 [2]	–	1000 1/1	8/2	2m/M5	40/20	1.5/0.37	58-300	20/5
ST 2010-8/2 [2]	–	2000 2/1	4/1	2m/M5	40/20	1.5/0.37	66-300	20/5

Supply voltage 380 – 415 V, 50 Hz (at ST 05: 380 – 400 V), operating voltage 48 VAC, contactor control with converter, control unit for 2-stage speeds, protection IP55. Optionally with travel limit switch and towing arm. Not included in scope of delivery: Limit switch, timer and temperature monitoring.
[1] Delivery time 48h ex works Wuppertal, [2] Delivery time on request

INFO

Other options on request!

Festooned cable systems please see pages 160 - 161.

CPA 10-9

CPA 1-13 / 2-10 und 5-5
CPA 10-9
Pneumatic chain hoist with suspension hook

Capacity 125 - 980 kg

Pneumatic chain hoists are characterized by high durability in a great number of industrial applications. The robust but light weight housing allows an easy transport.

Features

- Operating pressure 6 bar
- Rotating piston motor with 100 % duty rating and an unlimited number of starts for continuous operation.
- Integrated limit switches for highest and lowest hook position as standard.
- Self-adjusting automatic disc brake
- Extremely sensitive control with emergency-stop for a precise positioning of the load.
- Air release for brake as standard for CPA 10-9

Optional

- Trolleys for pneumatic chain hoists with suspension hook.
- Maintenance unit for main air supply pipe (pressure regulator, manometer, lubricator and support).
- Chain container

Applications

Automobile and aircraft industries, shipyards, on ships and docks. Foundries, on-/offshore, paint factories and paint shops, refineries, oil depots, galvanizing. Printing, textile and food industries, pulp, paper and cement mills. Glass and ceramic industries, wood working industries, chemical industries, heat treatment and power plants etc.

Explosion-proof version corresponds to Basic.

INFO

To ensure faultless operation the compressed air supply must be filtered and oiled!

Also suitable for operation with nitrogen.

Yale hoists and trolleys are not designed for passenger elevation applications and must not be used for this purpose.

Technical data CPA

Model	Art.-No.	Capacity in kg/ Number of chain falls	Chain dimensions d x p in mm/ design	Classification FEM/ISO	Lifting speed with rated load [1] m/min	Lifting speed without load [1] m/min	Lowering speed with rated load [1] m/min	Air consumption with rated load [1] m³/min	Hoist motor rating kW	Weight at 3 m Hub kg
CPA 1-13	N08501007	125/1	4 x 12.2 - DAT	1 Am/M4	13.1	17.1	11.3	0.9	0.4	15.4
CPA 2-10	N08501008	250/1	4 x 12.2 - DAT	1 Am/M4	9.8	17.1	13.7	0.9	0.4	15.4
CPA 5-5	N08501010	500/2	4 x 12.2 - DAT	1 Am/M4	4.6	7.9	6.7	0.9	0.4	17.2
CPA 10-9	N08501012	980/2	6.3 x 19.5 - DAT	1 Bm/M3	8.5	16.2	14.9	1.27	1.33	27.7

[1] Values for 6.3 bar flow pressure and 2 m control drop. Speeds will be reduced in case of longer control length.
CPA 1-13, CPA 2-10 and CPA 5-5 max. hose length 12 m, air supply 3/8" NPT, air consumption 0.9 m³/min.
CPA 10-9 max. hose length 20 m, air supply 1/2" NPT, air consumption 2.1 m³/min.

Dimensions CPA

Model	CPA 1-13	CPA 2-10	CPA 5-5	CPA 10-9
A, mm	292	292	324	457
A1, mm	410	410	410	508
B, mm	21	21	14	27
C, mm	20	20	24	28
D, mm	16	16	14	28
F1, mm	90	90	90	130
F2, mm	120	120	120	180
K, mm	103	103	103	165
L, mm	57	57	57	83
M, mm	120	120	120	135
N, mm	50	50	50	25
Q1, mm	142	142	142	162
Q2, mm	183	183	183	181

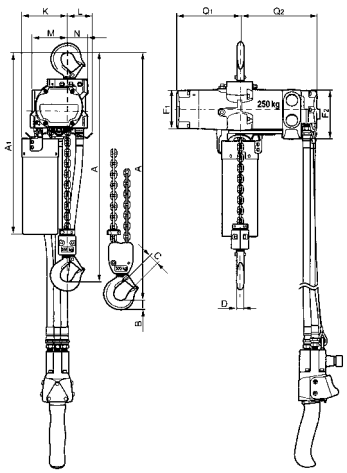

CPA 1-13 / 2-10 / 5-5

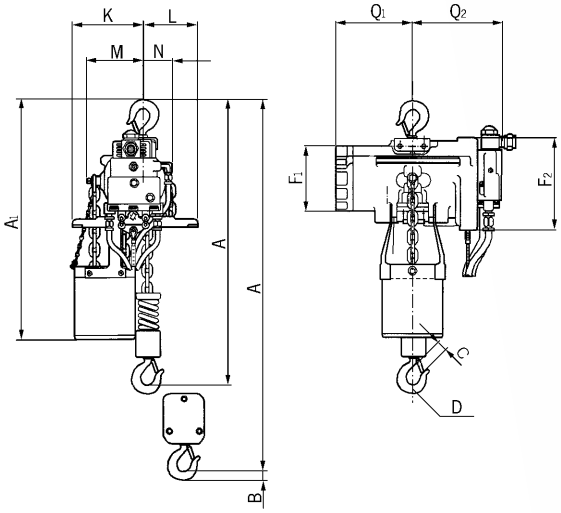

CPA 10-9

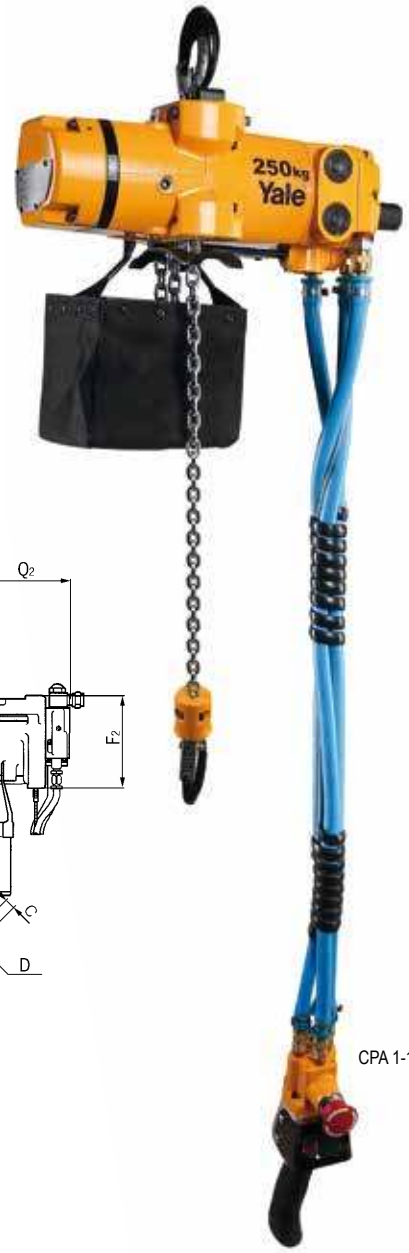

CPA 1-13

Image shows BASIC design

CPA ATEX Basic Pneumatic chain hoist with suspension hook or with integrated trolley

Capacity 2000 - 10000 kg

With 100 % duty rating and an unlimited number of starts the model CPA is suitable for heavy duty applications. It is insusceptible to contamination, humidity and aggressive mediums from the outside.
The hoists are composed of three main components which makes service easy and inexpensive.

Features

- Working pressures 4 - 6 bar.
- Robust rotating piston motor has an adjustable spring pressure brake that holds the load secure even in the event of an air failure.
- The standard, oil bath lubricated planetary gearbox is particularly smooth running and enables a low overall height.
- High starting torque due to switching valves in the motor body.
- Low noise emission due to large dimension silencer.
- Sensitive control by means of 2 resp. 4 button pendant control with emergency-stop.
- The assembly of component parts result in a low overall height (up to 3000 kg only one chain fall).
- The 5-pocket load chain sheave, manufactured from wear resistant case hardening steel, is matched perfectly to the load chain to guarantee smooth and precise chain motion.
- Forged suspension and load hooks are made from non-aging, high tensile steel and fitted with robust safety latches.
- The standard case hardened and zinc-plated link chain is matched perfectly to the load chain to guarantee smooth and precise chain motion.
  All requirements of national and international standards and regulations are fulfilled.

Optional

- Also available in combination with trolleys, both trolley/hook suspension and with integrated trolley.
  Also applies to Atex.
- Rope control
- Limit switch
- Chain container
- Maintenance unit, consisting of pressure regulator, pressure gauge, lubricator and holder.
- Mobile maintenance unit
- Stainless steel load chain.

INFO

To ensure faultless operation the compressed air supply must be filtered and oiled!

Also suitable for operation with nitrogen.

Where no maintenance unit can be installed permanently, it is recommended to work with a mobile maintenance unit.

Information about chains see pages 90 - 92.

Technical data CPA ATEX Basic

Model	Art.-No.	Capacity in kg/ Number of chain falls	Chain dimensions d x p in mm/ design	Classification FEM/ISO	Lifting speed with rated load[1] m/min	Lifting speed without load[1] m/min	Lowering speed with rated load[1] m/min	Hoist motor rating kW
CPA ATEX 20-8	N08505001	2000/1	11.3 x 31 - DAT	1 Bm/M3	7.4	9.9	11.0	2.6
CPA ATEX 30-6	N08505002	3000/1	11.3 x 31 - DAT	1 Bm/M3	6.0	9.9	13.0	3.2
CPA ATEX 50-3	N08505004	5000/2	11.3 x 31 - DAT	1 Am/M4	3.4	5.0	6.0	3.0
CPA ATEX 60-3	192069175	6000/2	11.3 x 31 - DAT	1 Am/M4	3.0	5.0	6.5	3.2
CPA ATEX 75-2	N08505005	7500/3	11.3 x 31 - DAT	1 Am/M4	2.0	3.3	4.3	3.2
CPA ATEX 100-3	N08505006	10000/4	11.3 x 31 - DAT	1 Am/M4	3.4	5.0	6.0	2 x 3.0

[1] Values at 6 bar flow pressure and 2 m control hose. Air consumption at nominal load 4.7 m³/min. For CPA 100-3 = 9.4 m³/min, air connection R1".
Quick exhaust valves are installed from 11 m upwards, max. hose length 20 m.

Model	Art.-No.	Weight[2] suspension hook kg	Weight[2] geared trolley kg	Weight[2] pneumatic trolley kg
CPA ATEX 20-8	N08505001	121	188	199
CPA ATEX 30-6	N08505002	121	188	199
CPA ATEX 50-3	N08505004	140	206	218
CPA ATEX 60-3	192069175	140	206	218
CPA ATEX 75-2	N08505005	on request	on request	on request
CPA ATEX 100-3	N08505006	on request	on request	on request

[2] Weight at standard lift 3 m. Other lifting heights on request.

INFO

Yale hoists and trolleys are not designed for passenger elevation applications and must not be used for this purpose.

INFO

Also available in Medium, High design on request.

We are pleased to send you our new Atex catalogue in PDF format.

Image shows MEDIUM design incl. rope control

Application with pneumatic trolley

Mobile maintenance unit

Technical data trolleys

Capacity kg	Size	Beam flange width b mm	Beam flange thickness t max. mm	Curve radius min. m	Pneumatic trolley travel speed m/min	Pneumatic trolley motor kW
2000 - 6000	A	98 - 180	27	2.0	18	0.55
2000 - 6000	B	180 - 300	27	1.8	18	0.55
7500 - 10000	B	125 - 310	40	1.8	–	–

Flow pressure 6 bar, air consumption with rated load 0.75 m³/min, air connection R½".

Dimensions CPA

Model	CPA 20-8	CPA 30-6	CPA 50-3	CPA 60-3	CPA 75-2	CPA 100-3
A, mm	516	516	681	681	950	1068
A1, mm	286	286	428	428	479	651
B, mm	35	35	45	49	60	60
C, mm	37	37	46	44	52	52
D, mm	24	24	30	30	40/45	40/45
F1, mm	160	160	160	160	160	160
F2, mm	165	165	165	165	165	165
G, mm	220	220	220	220	220	581
G1, mm	180	180	140	140	268	311
G2 (13 m), mm	258	258	218	218	–	–
G2 (21 m), mm	278	278	238	238	345	408
H1, mm	110	110	110	110	110	110
H2, mm	135	135	135	135	307	256
H3, mm	115	115	115	115	115	115
K1, mm	100	100	100	100	92	92
K2, mm	51	51	51	51	62	62
M, mm	50	50	9.6	9.6	139	181
N, mm	60	60	100	100	136	291
Q1, mm	272	272	272	272	272	272
Q2, mm	325	325	325	325	325	325

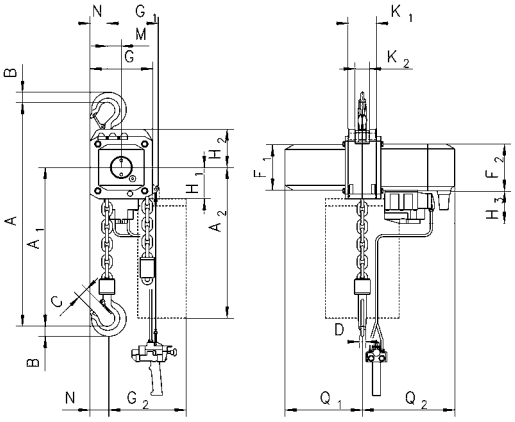

CPA with suspension hook, 2000 - 3000 kg, single fall

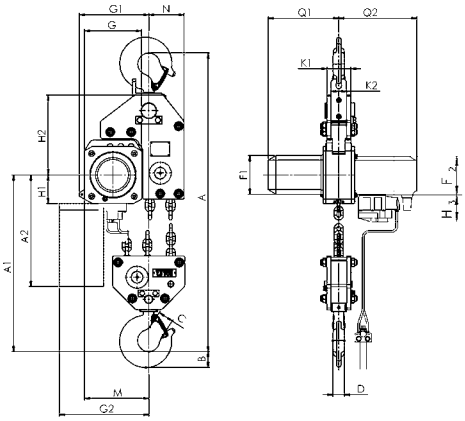

CPA with suspension hook, 7500 kg, three falls

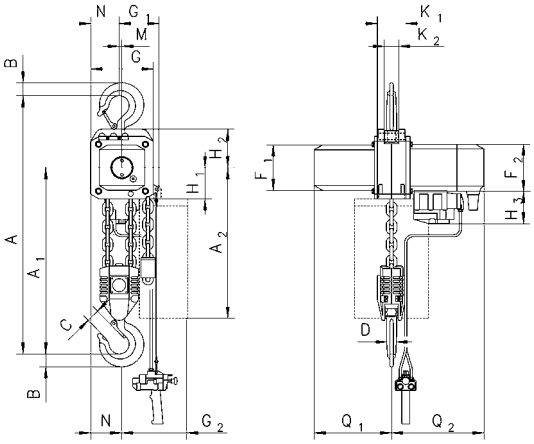

CPA with suspension hook, 4000 - 5000 kg, double fall

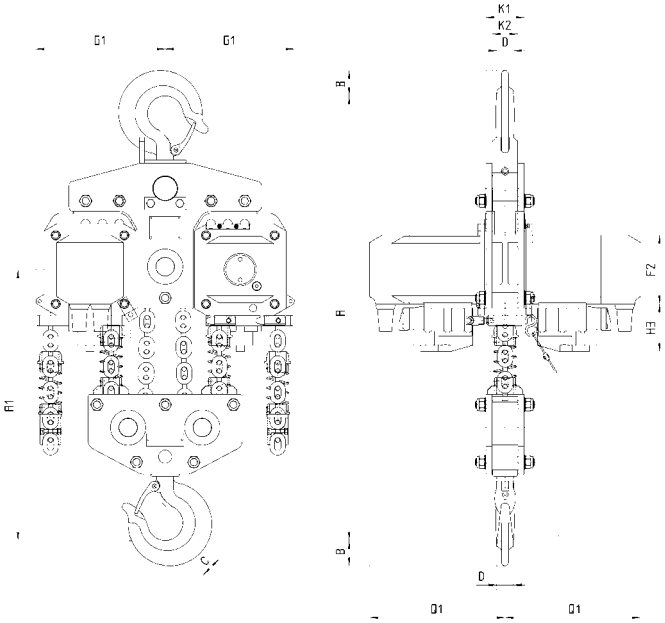

CPA with suspension hook, 10000 kg, four falls

Dimensions CPA

Model	CPA 20-8	CPA 30-6	CPA 50-3	CPA 60-3	CPA 75-2	CPA 100-3
A2 (13 m), mm	430	430	430	430	–	–
A2 (21 m), mm	530	530	530	530	530	530
A4, mm	465	465	615	615	855	965
A5, mm	298	298	298	298	477	425
A6, mm	190	190	190	190	182	182
b, mm	A = 98 - 180/ B = 180 - 300	A = 98 - 180/ B = 180 - 300	A = 98 - 180/ B = 180 - 300	A = 98 - 180/ B = 180 - 300	125 - 310	125 - 310
F, mm	150	150	150	150	113	113
I, mm	142.5	142.5	142.5	142.5	130	130
L1, mm	209	209	209	209	200	200
L2, mm	262.5	262.5	262.5	262.5	215	215
L3, mm	265	265	265	265	265	265
L4, mm	213	213	253	253	291	291
L5, mm	312	312	272	272	–	–
L6, mm	315	315	275	275	–	–
O, mm	125	125	125	125	150	150
P, mm	208	208	208	208	208	208
P1, mm	284	284	284	284	284	284
S, mm	b + 70	b + 70	b + 70	b + 70	b + 98	b + 98
t, mm	27	27	27	27	40	40
T1 size A	182	182	182	182	–	–
T1 size B	242	242	242	242	270	270

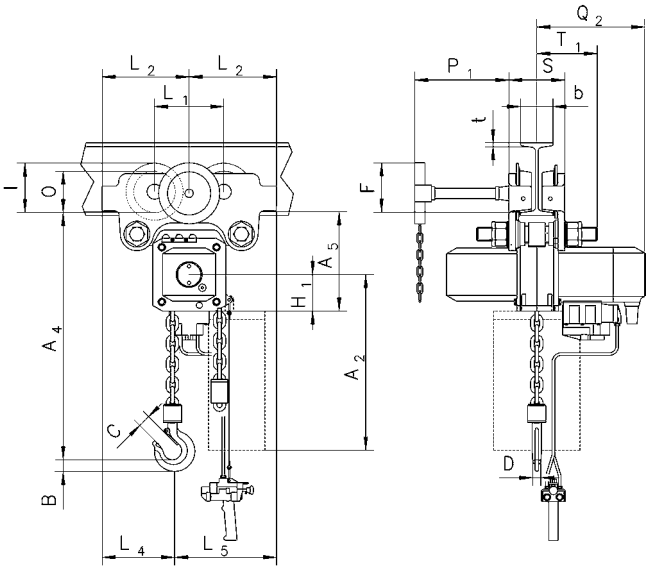

CPA with integrated manual geared trolley

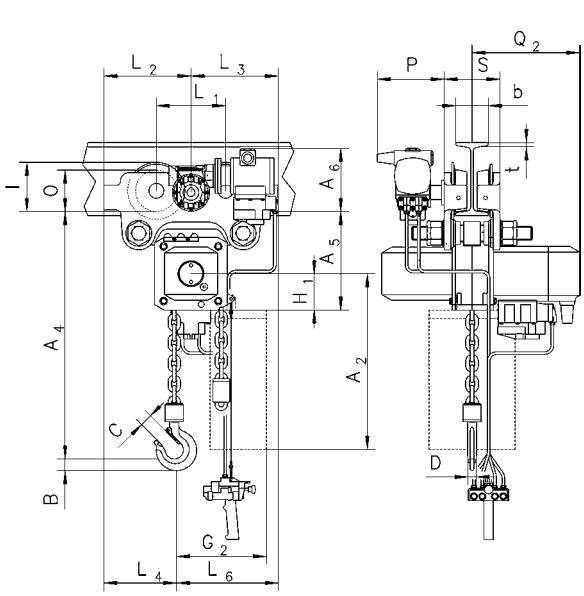

CPA with integrated pneumatic trolley

Yale and STAHL CraneSystems link chains, zinc-plated

for	Art.-No.	Capacity kg	Number of chain falls	Chain dimensions d x p mm	Chain stop
D85	N01607633	750	1	6 x 18.5	•
	N01607645	1500	1	9 x 27	•
	N01607652	3000	1	11 x 31	•
	N01607652	6000	2	11 x 31	•
	N01607652	10000	3	11 x 31	•
Yale*ERGO 360*	N02109357	750	1	5.6 x 17.1	•
Yale*ERGO 360 UT*	192034634	1500	1	7.1 x 21	•
UNO*plus-A*	192046315	3000	1	10 x 28	•
	192046315	6000	2	10 x 28	•
	192046315	9000	3	10 x 28	•
AL	N02107637	750	1	6.3 x 19.1	•
	N02107637	1000	1	6.3 x 19.1	•
	N02107639	1500	1	7.1 x 21.2	•
	N02107649	3000	1	10 x 30.2	•
PT-A	N02109357	800	1	5.6 x 17.1	•
	N02107639	1600	1	7.1 x 21.2	•
	N02109358	3200	1	9 x 27.2	•
	N02109358	6300	2	9 x 27.2	•
UNO*plus*	N04307635	750	1	6 x 18	•
Silverline HZ S	N04307642	1500	1	8 x 24	•
	N04307647	3000	1	10 x 30	•
	N04307647	6000	2	10 x 30	•
Yale*handy*	N02100004	250	1	4 x 12	–
	N02100009	500	1	4 x 12	–
Yale*MINI 360*	192084202	250	1	3 x 9	–
	N02100004	500	1	4 x 12	–
Yale*lift 360*	N04300008	500	1	5 x 15	–
	N04307635	1000	1	6 x 18	•
	N04307642	2000	1	8 x 24	•
	N04300013	3000	1	10 x 30	•
	N04307647	5000	2	10 x 30	•
	N04300013	10000	3	10 x 30	•
	N04300013	20000	6	10 x 30	•
VS*III*	N02100004	250	1	4 x 12	–
Silverline Stira S*	N04300008	500	1	5 x 15	–
	N04307635	500*/1000*	1	6 x 18	•
	N04307642	1500*	1	8 x 24	•
	N04307635	2000	2	6 x 18	•
	N04307642	2000*	1	8 x 24	•
	N04307642	3000*	2	8 x 24	•
	N04307647	3000	1	10 x 30	•
	N04307647	5000*	2	10 x 30	•
	N04307647	10000	4	10 x 30	•
	N04307647	20000	8	10 x 30	•
	N04307647	30000	12	10 x 30	•
	N04307647	50000	18	10 x 30	•
CPV/F	N07600001	125/250	1	4 x 12.2	–
	N07600001	500	2	4 x 12.2	–
	N06900001	500	1	5 x 15.1	–
	N06900001	1000	2	5 x 15.1	–
	N06900002	1000	1	7.1 x 20.5	–
	N06900002	2000	2	7.1 x 20.5	–
	N06109488	2500	1	11 x 31	–
	N06109488	5000	2	11 x 31	–
ST 5 / STD 5	A3310059	320/630	1/2	4 x 12	–
ST 10 / STD 10	A3310069	500/1000	1/2	5 x 16	–
ST 20 / STD 30	A3310019	1000/2000	1/2	7 x 21.9	–
ST 30 / ST 32 STD 50 / STD 60	A3310049	1600/3200	1/2	9 x 27	–
ST 50	A3310139	2500/5000	1/2	11.3 x 31	–
ST 60	A3310239	3200/6300	1/2	11.3 x 31	–

Yale and STAHL CraneSystems link chains, zinc-plated

for	Art.-No.	Capacity kg	Number of chain falls	Chain dimensions d x p mm	Chain stop
CPA	N07600001	125-250	1	4 x 12.2	–
	N07600001	500	2	4 x 12.2	–
	N08600024	980	2	6.3 x 19.5	•
CPEF	N06109488	1600 - 3000	1	11.3 x 31	–
CPA	N06109488	3200 - 6000	2	11.3 x 31	–
	N06109488	7500	3	11.3 x 31	–
	N06109488	10000	4	11.3 x 31	–

Yale and STAHL CraneSystems link chains, stainless steel

for	Art.-No.	Capacity kg	Capacity max. stainless steel load chain kg	Number of chain falls	Chain dimensions d x p mm	Chain stop
D85	N01607646	1500	1500	1	9 x 27	•
AL	N02107638	750	750	1	6.3 x 19.1	•
	N02107638	1000	1000	1	6.3 x 19.1	•
	N02107640	1500	1250	1	7.1 x 21.2	•
	N02107650	3000	2000	1	10 x 30.2	•
UNO*plus*	N04307636	750	750	1	6 x 18	•
	N04307643	1500	1250	1	8 x 24	•
	N04307648	3000	2000	1	10 x 30	•
	N04307648	6000	4000	2	10 x 30	•
Yale*lift 360*	N07218304	500	500	1	5 x 15	–
	N04307636	1000	900	1	6 x 18	•
	N04307643	2000	1500	1	8 x 24	•
	N04307648	3000	2500	1	10 x 30	•
	N04307648	5000	5000	2	10 x 30	•
VS*III*	N07218304	500	500	1	5 x 15	–
	N04307636	1000	900	1	6 x 18	•
	N04307643	1500	1500	1	8 x 24	•
	N04307636	2000	1800	2	6 x 18	•
	N04307643	2000	1500	1	8 x 24	•
	N04307643	3000	3000	2	8 x 24	•
	N04307648	3000	2500	1	10 x 30	•
	N04307648	5000	5000	2	10 x 30	•
	N04307648	10000	10000	4	10 x 30	•
	N04307648	20000	20000	8	10 x 30	•
	N04307648	30000	30000	12	10 x 30	•
	N04307648	50000	45000	18	10 x 30	•
CPV/F	N07600002	125/250	125/250	1	4 x 12.2	–
	N07600002	500	500	2	4 x 12.2	–
	N06900012	500	500	1	5 x 15.1	–
	N06900012	1000	1000	2	5 x 15.1	–
	N06900013	1000	800	1	7.1 x 20.5	–
	N06900013	2000	1600	2	7.1 x 20.5	–
ST 5 / STD 5	A3319459	125/250	200/400	1/2	4 x 12	–
ST 10 / STD 10	A3319259	200/400	320/630	1/2	5 x 16	–
ST 20 / STD 30	A3319279	400/800	630/1250	1/2	7 x 21.9	–
ST 30 / ST 32 STD 50 / STD 60	A3319289	630/1250	1000/2000	1/2	9 x 27	–
ST 50 / ST 60	A3310159	1000/2000	1600/3200	1/2	11.3 x 31	–
CPA	N07600002	125/250	125/250	1	4 x 12.2	–
	N07600002	500	500	2	4 x 12.2	–
	N08600025	980	980	2	6.3 x 19.5	•
CPEF	N06100001	1600/2000	1600/2000	1	11.3 x 31	–
CPA	N06100001	2500/3000	2000	1	11.3 x 31	•
	N06100001	3200/4000	3200/4000	2	11.3 x 31	•
	N06100001	5000/6000	4000	2	11.3 x 31	•
	N06100001	7500	6000	3	11.3 x 31	•
	N06100001	10000	8000	4	11.3 x 31	•

Yale roller chains

for	Art.-No.	Capacity in kg/ Number of chain falls	Chain dimensions p x b inch	Chain stop
C 85	N01244800	750/1	5/8" x 3/8"	•
	N01245700	1500/1	1" x 1/2"	•
	N01245701	3000/1	1 1/4" x 5/8"	•

Yale hand chains, zinc-plated or stainless steel

for	Chain dimensions d x p in mm	Art.-No. zinc-plated	Art.-No. stainless steel
HTG, VS*plus*, VS*III*, Yale*lift 360*	5 x 26	N04307654	N04307655
- Connection link for hand chain	5 x 26	N00404733	N00400668
VS*III 250*, Yale*MINI 360*	3 x 15	N04300019	–
- Connection link for hand chain	3 x 15	N00440172	–

stainless steel

zinc-plated

INFO

The chain claw - the simple alternative. Fast and practical.

KKL Yale chain claw for round link chains

Model	Art.-No.	Capacity kg	Suitable for chain-Ø mm
KKL 2000	192080829	2000	7 - 8
KKL 3150	192080830	3150	10

The use for different chain dimensions is not permitted.

KKL Yale chain claw for round link chains

The KKL also offers the operator additional safety with dynamic loads!
Due to the lack of additional mechanical locking, the chain claw can be moved faster than the chain stop.
It replaces the chain end piece and thus saves additional weight!

Here too, the attachment point should be as close to the housing as possible, for optimal safety.

YKST Yale chain stop for round link or roller chains

The Yale chain stop is designed to be used as an additional fall arrester for round link and roller chains. Especially where oscillations and vibrations could cause the load chain to slip, chain stops can reliably increase safety! For this purpose, the chain stopper YKST should be positioned as close as possible to the housing of the unit and should be repositioned after the hoist has been operated so that the dynamics are as low as possible. After pressing the slider, the chain stopper can be moved on the load chain of the hoist and locks itself by means of spring force after positioning on the chain. The YKST can only be actively unlocked by the release mechanism of the actively unlocked by the release mechanism of the slider. **This prevents accidental loosening during operations!**

Chain stop attached to roller chain

Chain stop attached to link chain

INFO

The nominal load marked on the chain stopper is the max. load, that each single chain fall can lift, but not the nominal load of the hoist for example model D 85, 10 t, three chain falls, satisfy 3334 kg per chain fall.

INFO

The Yale chain stop - proven in use for more than 10 years!

The YKST was developed especially for the requirements in overhead line construction and was then dynamically tested by an independent body!

YKST Yale chain stop for link chains

Model	Art.-No.	Capacity kg	Suitable for chain-Ø mm	Dimension L x W x D mm
YKST 1600	N00100115	1600	5.6 - 8	75 x 56 x 15
YKST 3200	N00100110	3400	9 - 11	105 x 82 x 24

The use for different chain dimensions is not permitted.

YKST Yale chain stop for roller chains

Model	Art.-No.	Capacity kg	Suitable for chain-Ø
YKST 750	N00100146	750	5/8" x 3/8"
YKST 1500	N00100143	1500	1" x 1/2"
YKST 3400	N00100156	3400	1 1/4" x 5/8"

The use for different chain dimensions is not permitted.

80 - 125 kg

300 - 750 kg

SW-W
Wall-mounted winch

Capacity 80 - 750 kg

Wall-mounted rope winches of the SW-W model range are intended for fixed stationary mounting inside a building. The steel wire rope is guided to the required suspension point of the load by means of deflection sheaves.

Features

- Robust aluminium housing for models SW-W 80 and SW-W 125, proven steel plate design for models SW-W 300 - 750.
- Spur gear drive for optimal efficiency and comfortable handling. Direct drive for loads up to 125 kg.
- The low-noise safety spring brake safely holds the load in every position.
- Removable hand crank for models SW-W 80 and SW-W 125, foldable crank for models SW-W 300 - 750.
- Easy and quick mounting onto walls.

Technical data SW-W

Model	Art.-No.	Capacity 1st layer kg	Capacity top layer kg	Drum diameter mm	Rope diameter[1] mm	Useable rope length 1st layer m	Useable rope length top layer m	Lift per crank rotation mm	Required crank effort daN	Weight without rope kg
SW-W 80	N040271017	80	45	51	3	2.4	30	170	12	3
SW-W 125	N040271008	125	65	40	4	2	12	138	13	3
SW-W 300	30271001	300	220	108	5	2.1	15	68	15	10
SW-W 500	30271136	500	350	108	6	2.4	15	35	13	11
SW-W 750	30271019	750	550	108	7	2	10	35	20	11

[1]recommended rope: DIN EN 12385 FE-znk 1770 sZ-spa

Dimensions SW-W

Model	SW-W 80	SW-W 125	SW-W 300	SW-W 500	SW-W 750
A, mm	110	110	250	250	250
B, mm	110	110	250	250	250
C, mm	130	130	290	290	290
D, mm	130	130	290	290	290
Ø E, mm	9	9	14.5	14.5	14.5
F, mm	15	15	2	2	2
H, mm	121	121	85	85	85
I, mm	55	55	138	138	138
J, mm	–	–	117	117	117
K, mm	250	250	250	250	250
L, mm	130	130	130	130	130
M, mm	68	68	39	39	39
O, mm	60	60	50	50	50
P, mm	275	275	192	192	192

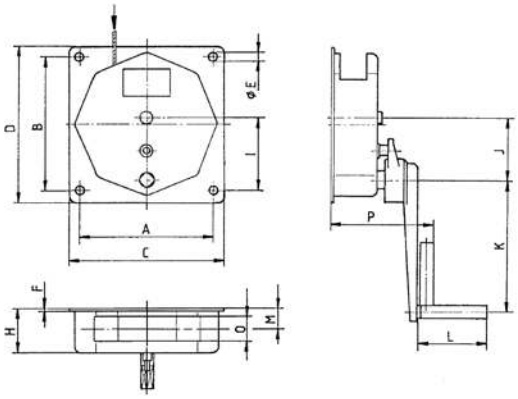

SW-W ALPHA
Wall-mounted winch

Capacity 300 - 1000 kg

A versatile wall-mounted winch for an easy lifting of loads.

Features

- Light weight robust stamped steel housing and compact design.
- Spur gear drive for optimal efficiency and comfortable handling.
- Rope lead-offs to all directions.
- All parts are zinc-plated for increased corrosion protection, drum with additional special coating.
- Integrated crank with load pressure brake for safe holding of the load.
- Easy and quick mounting onto walls.

INFO

For a better guiding of the rope to the suspension point we recommend the use of sheaves or sheave blocks, please see page 105.

View x
M 1:2,5

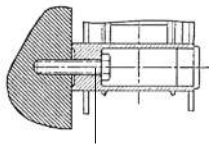

Fastening screws to be fastened with M12 bolts quality class 8.8 (not included)

Technical data SW-W ALPHA

Model	Art.-No.	Capacity 1st layer kg	Capacity top layer kg	Drum length mm	Rope diameter [1] mm	Useable rope length 1st layer m	Useable rope length top layer m	Lift per crank rotation mm	Required crank effort daN	Weight without rope kg
SW-W ALPHA 300	30272006	300	130	50	5	1,3	28	57	13	10
SW-W ALPHA 500	30272005	500	230	50	6	1	20	55	17	10
SW-W ALPHA 750	30272002	750	270	50	7	1	26	45	17	16
SW-W ALPHA 1000	30272001	1000	360	50	7	1	26	45	18	16

[1] recommended rope: DIN EN 12385 FE-znk 1770 sZ-spa

Dimensions SW-W ALPHA

Model	SW-W ALPHA 300	SW-W ALPHA 500	SW-W ALPHA 750	SW-W ALPHA 1000
A, mm	234	234	306	306
B, mm	262	262	337	337
C, mm	274	274	357	357
D, mm	203	203	265	265
E, mm	107	107	107	107
F, mm	194	194	194	194
G, mm	183	183	255	255
Ø H, mm	63	63	63.5	63.5
I, mm	200	250	250	320
J, mm	58.6	58.6	92.5	92.5
K, mm	109.5	109.5	107	107

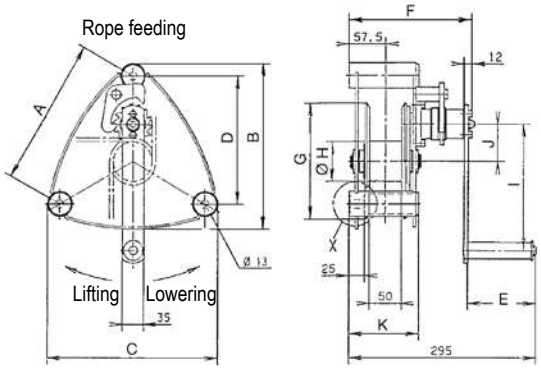

SW-W-SGO-S
Capacity 1500 kg

SW-W-SGO-S Wall-mounted winch with worm gear drive

Capacity 250 - 5000 kg

Wall-mounted winch with worm gear drive and load pressure brake for efficient lifting of heavy loads.

Features

- Housing and rope drums made out of robust steel plate.
- Worm gear drive with additional load pressure brake for safe holding of the load.
- Roller bearings ensure smooth running of the rope and increased lifetime of the winch.
- Second speed for fast lifting of smaller loads, resulting in lowest possible handle effort and rapid winding of the rope (for capacitites of 2000 kg and above).
- Wide rope drum for a large rope capacity with two rope attachment points.
- Easy and quick mounting.

Technical data SW-W-SGO-S

Model	Art.-No.	Capacity 1st layer kg	Capacity top layer kg	Rope diameter[1] mm	Useable rope length 1st layer m	Useable rope length top layer m	Lift per crank rotation mm	Required crank effort daN	Weight without rope kg
SGO-S 250	192104964	250	114	4	5.1	81	14	12	11
SGO-S 500	192104965	500	256	6	4.9	66	11	15	15
SGO-S 1000	192101966	1000	502	8	5.8	75	10	24	23
SGO-S 1500	192104967	1500	846	10	4.2	46	9	24	33
SGO-S 2000	192104968	2000	1038	12	5.4	64	3/8[2]	13/45[2]	63
SGO-S 3000	192104969	3000	1667	14	5.7	76	2/8[2]	16/55[2]	89
SGO-S 5000	192104970	5000	3276	18	5.2	49	2/8[2]	16/85[2]	124

[1] recommended rope: DIN EN 12385 FE-znk 1770 sZ-spa [2] 1st/2nd speed

Dimensions SW-W-SGO-S

Model	SGO-S 250	SGO-S 500	SGO-S 1000	SGO-S 1500	SGO-S 2000	SGO-S 3000	SGO-S 5000
A, mm	238	262	302	302	410	436	436
B, mm	145	160	195	250	310	380	467
C, mm	100	115	141	178	196	251	316
D, mm	192	223	254	254	360	386	386
G, mm	90	88	104	108	135	145	143
H, mm	128	148	158	162	173	203	200
Ø J, mm	60	68	101	102	133	162	219
Ø K, mm	11	14	17	17	25	25	25
Ø L, mm	136	160	242	240	312	375	437
M, mm	191	209	266	278	383	480	515
N, mm	15	15	15	15	45	47	60
O, mm	364	382	438	451	694	791	826
P, mm	280	325	350	350	380	380	380
R, mm	162	189	274	312	417	526	613
S, mm	128	128	128	128	216	216	216

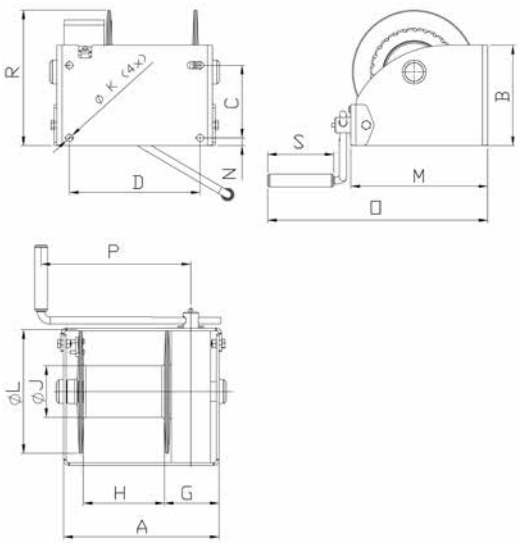

MWS
Manual winch
with spur gear drive

Capacity 150 - 1500 kg

For the operation where no electricity is available or in a dirty environment.

Recommended rope diameter according to
EN 12385 FE-znk 1770 sZ-spa.
The rope is not included in the delivery.

Features

- Enclosed gear drive for protection of internal parts, even under tough working conditions.
- Spur gears on roller bearings, rope drum on plain bearings.
- Compact design.
- Easy and quick mounting onto walls, poles etc.
- They have a self-locking, anti-kickback and adjustable crank handle for fast lifting of smaller loads, resulting in lowest possible handle effort and rapid winding of the rope.
- Automatic load pressure brake for safe holding and extremely sensitive lowering of the load. Unintentional brake release is prevented even with swinging loads.
- They are suitable for operation in ambient temperatures of - 10 °C up to + 50 °C.

Optional

- Corrosion resistant version.

MWS 1000 - 1500

MWS 300 - 600

MWS 150

INFO

For a better guiding of the rope to the suspension point we recommend the use of sheaves or sheave blocks, please see page 105.

Pfaff winches are not designed for passenger elevation applications and must not be used for this purpose.

Technical data MWS

Model	Art.-No.	Capacity 1st layer kg	Capacity top layer kg	Crank effort 1st layer daN	Lift per crank rotation 1st layer mm	Lift per crank rotation top layer mm	Weight without rope kg	Rope diameter[1] mm	Useable rope length 1st layer m	Useable rope length max. m	Number of layers max.
MWS 150	N02800013	150	67	11	122	210	4	4	0.8	13	8
MWS 300	N02800014	300	172	6	32	44	10	4	1.8	35	7
MWS 600	N02800015	600	366	10	28	41	11	6	1.2	12	6
MWS 1000	N02800018	1000	614	11	20	27	27	8	3.0	33	5
MWS 1500	N02800019	1500	927	12	14	19	27.5	10	2.7	21	5

[1] recommended rope: DIN EN 12385 FE-znk 1770 sZ-spa

Dimensions MWS

Model	MWS 150	MWS 300	MWS 600	MWS 1000	MWS 1500
A, mm	65	200	200	219	219
B, mm	168	300	300	250	250
C, mm	128	268	268	212	212
D, mm	40	168	168	150	150
E, mm	303	318	318	484	484
F, mm	–	–	–	250	250
G, mm	26	–	–	30	30
H, mm	41	55	55	113	113
I, mm	–	–	–	170	170
Ø J, mm	35	70	60	102	102
K, mm	9	12	12	17	17
Ø L, mm	102	145	145	212	212
M, mm	168	182	182	130	130
N, mm	89	199	199	338	338
O, mm	92	96	96	44	44
P, mm	–	–	–	104	104
Q, mm	–	–	–	190	190
S, mm	129	129	129	129	129

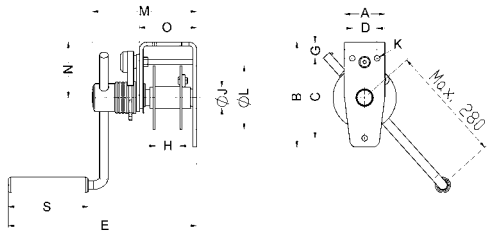

MWS, capacity 150 kg

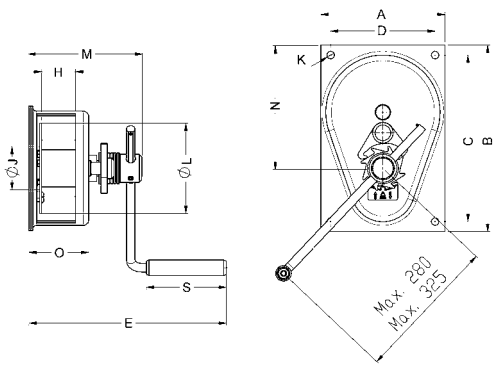

MWS, capacity 300 - 600 kg

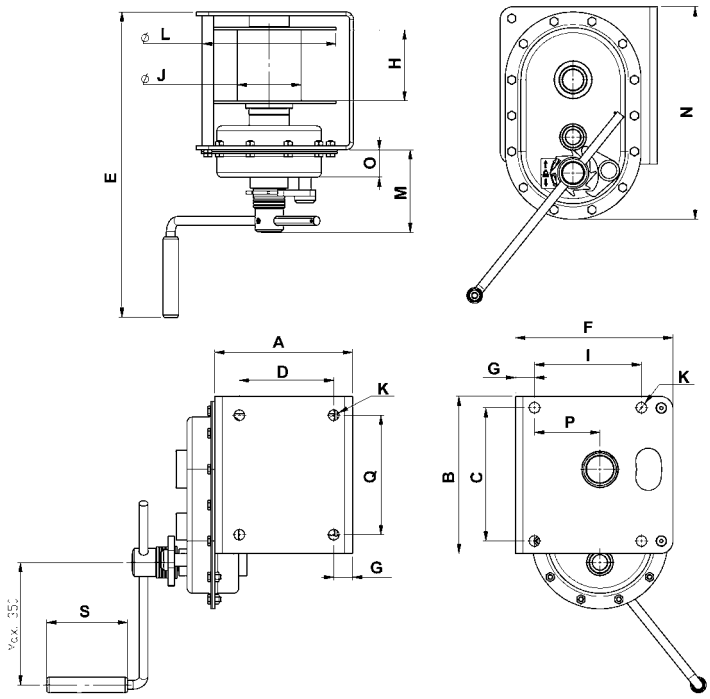

MWS, capacity 1000 - 1500 kg

LB
Console-mounted winch

Capacity 150 - 1200 kg

Originally developed as offroad winch the console-mounted winch model LB is used today for a variety of lifting and pulling applications.

Features

- Light weight robust stamped steel housing.
- Spur gear drive for optimal efficiency and comfortable handling.
- Automatic load pressure brake for save holding of the load in any position. An unintentional brake release is prevented.
- All parts are zinc-plated for increased corrosion protection, drum with additional special coating.
- Easy and quick mounting to consoles, even under lifting conditions.

Optional

- Stainless steel version (mat. 1.4301) for increased corrosion protection.

LB, zinc-plated version, capacity 1200 kg

LB, zinc-plated version, capacity 350 kg

LB-VA, stainless steel version, capacity 900 kg

INFO

For a better guiding of the rope to the suspension point we recommend the use of sheaves or sheave blocks, please see page 105.

Pfaff winches are not designed for passenger elevation applications and must not be used for this purpose.

Technical data LB

Model	Art.-No.	Capacity 1st layer kg	Capacity top layer kg	Rope diameter mm	Useable rope length 1st layer m	Useable rope length top layer m	Lift per crank rotation mm	Required crank effort daN	Weight without rope kg
LB 150 VZ	30239016	150	75	4[1]	0.8	11	125	17	4.2
LB 350 VZ	30239015	350	170	4[1]	1.8	20	125	25	4.8
LB 650 VZ	41239004	650	290	6[1]	1	20	55	22	7.3
LB 900 VZ	41239006	900	400	7[1]	0.8	14	58	24	10
LB 1200 VZ	42239008	1200	430	7[2]	1	26	45	24	12.1
LB 250 VA	32239017	250	125	4[1]	1.8	19.5	125	20	4.8
LB 650 VA	42239012	650	290	6[1]	1	20	55	22	7.6
LB 900 VA	32239013	900	320	7[1]	1	26	45	24	12.1

[1] recommended rope: DIN EN 12385 FE-znk 1770 sZ-spa [2] recommended rope: DIN EN 12385 SE-znk 2160 sZ-spa

Dimensions LB

Model	LB 150 VZ	LB 350 VZ	LB 650 VZ	LB 900 VZ	LB 1200 VZ	LB 250 VA	LB 650 VA	LB 900 VA
A, mm	–	–	232	232	273	–	232	273
B, mm	155	155	192	192	266	155	192	266
C, mm	175	175	210	210	240	175	210	240
Ø D, mm	36	36	63.5	63.5	63.5	36	63.5	63.5
Ø E, mm	100	100	183	183	255	100	183	255
F, mm	–	–	100	100	78	–	100	78
G, mm	75	75	58	58	75	75	58	75
H, mm	–	–	100	100	138	–	100	138
K, mm	159	189	192	192	192	191.5	190	190
L, mm	–	–	25	25	35	–	25	35
M, mm	45	75	38	38	30	75	38	30
N, mm	–	–	–	–	53	–	–	53
O, mm	200	320	250	320	320	320	250	250
P, mm	260	290	293	293	293	292.5	291	291
Q, mm	81	111	95	95	95	111	95	95
R, mm	50	80	50	50	50	80	50	50
S, mm	48	63	55	55	55	65.5	55	55

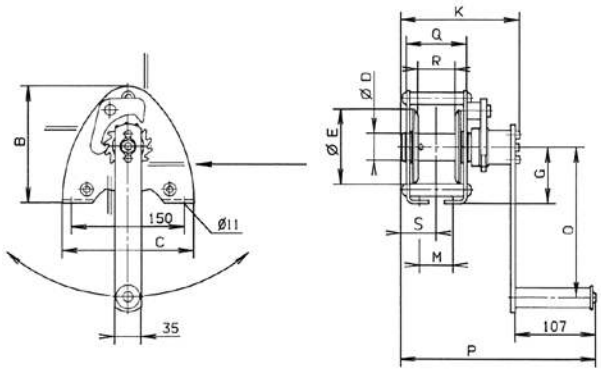

LB 150 - 350 kg

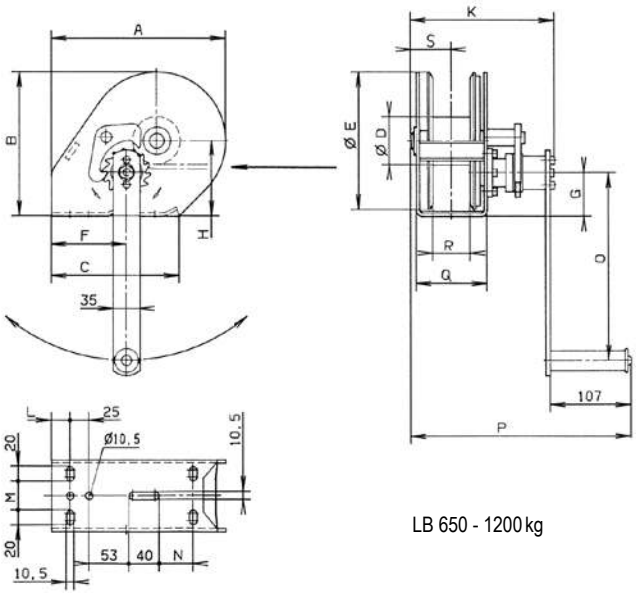

LB 650 - 1200 kg

SW-K GAMMA Console-mounted aluminium rope winch

Capacity 200 - 800 kg

Due to its rugged design, the aluminium rope winch is suitable for operation outdoors.

Features

- Compact aluminium housing and enclosed sprocket wheel drive. From a capacity of 500 kg with speed increasing ratio for small loads and quicker winding and unwinding of the unloaded rope.
- Spur gear drive for optimal efficiency and comfortable handling.
- Enclosed gear for the protection of parts inside, also for arduous applications.
- Low-friction shaft sliding bearings for improved rope lead-off and a longer service life of the winch.
- Wide rope drum for a large rope capacity with two rope attachment points.
- Easy and quick mounting.
- With integrated safety spring brake system and removable crank. The winches can be operated from either side.

SW-K GAMMA
capacity 800 kg

SW-K GAMMA
capacity 500 kg

Technical data SW-K GAMMA

Model	Art.-No.	Capacity 1st layer kg	Capacity top layer kg	Rope diameter[1] mm	Useable rope length 1st layer m	Useable rope length top layer m	Lift per crank rotation mm	Required crank effort daN	Weight without rope kg
GAMMA 200	N040270004	200	110	4[1]	3.6	40	195	19	6
GAMMA 500	N040270001	500	200	6[1]	4.2	50	60/400[2]	12	14
GAMMA 800	N040270006	800	350	7[1]	5.3	78	36/280[2]	18	16

[1]recommended rope: DIN EN 12385 FE-znk 1770 sZ-spa [2]load/speed increasing ratio

Model	Art.-No.	consists of
GAMMA 200	N040270004	30270004 + 39000153
GAMMA 500	N040270001	30270001 + 40033612
GAMMA 800	N040270006	30270006 + 39000153

Dimensions SW-K GAMMA

Model	GAMMA 200	GAMMA 500	GAMMA 800
A, mm	120	120	200
B, mm	160	220	326
C, mm	192	330	336
D, mm	152	100	180
E, mm	165	267	327
F, mm	135	125	250
Ø G, mm	9.5	11	14
Ø H, mm	50	60	70
L, mm	320	250	320
M, mm	207	165	207

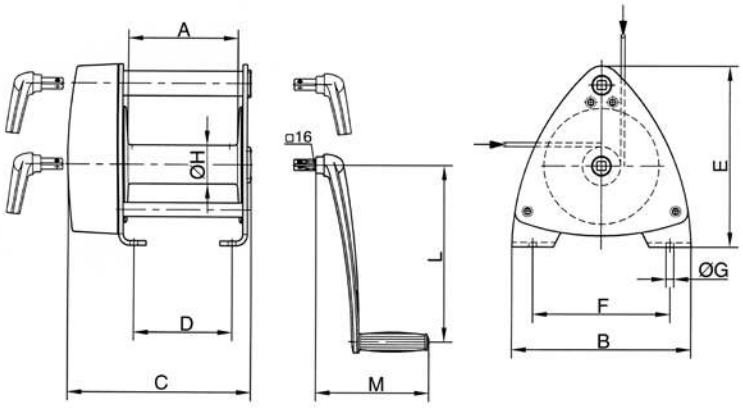

SW-KAL
Compact aluminium rope winch with free-wheeling device

Capacity 750 - 1120 kg

Console-mounted rope winches are used for super-structures on vehicles and trailers and when lifting and lowering loads.

Features

- Self-locking worm gear, free-wheeling device for ease of operation.
- Enclosed gear for the protection of internal parts, also for arduous applications.
- Low-friction shaft bearings for a longer service life of the winch.
- Easy and quick mounting.

INFO

Pfaff winches are not designed for passenger elevation applications and must not be used for this purpose.

Technical data SW-KAL

Model	Art.-No.	Capacity 1st layer kg	Capacity top layer kg	Drum diameter mm	Rope diameter[1] mm	Useable rope length 1st layer m	Useable rope length max. m	Lift per crank rotation mm	Lift per crank rotation top layer mm	Required crank effort daN	Weight without rope kg
KAL 750	30207004	750	600	100	6	1.3	10	15	17	20	7
KAL 1120	30208000	1120	600	63	7	0.5	10	11	16	22	7

[1]recommended rope: DIN EN 12385 FE-znk 1770 sZ-spa

Dimensions SW-KAL

Model	KAL 750	KAL 1120
A, mm	165	165
B, mm	168	168
C, mm	170	170
Ø D, mm	100	63
E, mm	180	180
F, mm	135	135
G, mm	60	60
H, mm	56	50
J, mm	160	160
Ø K, mm	13	13
L, mm	85	85

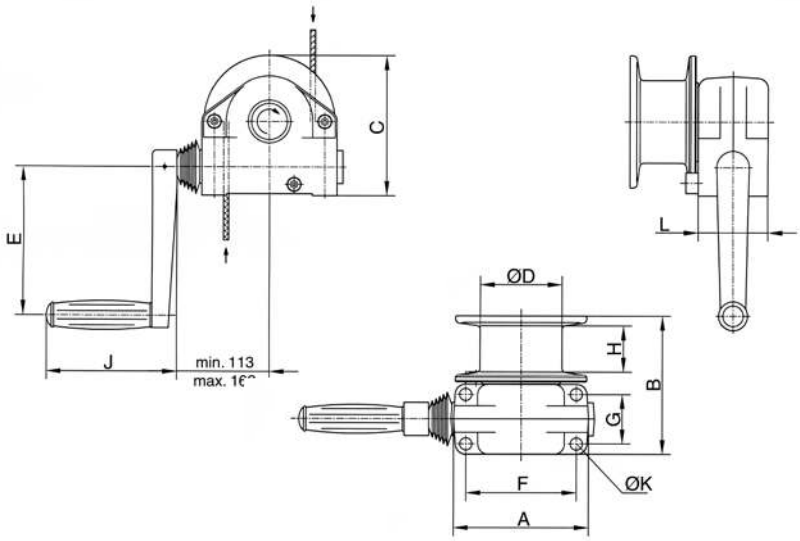

SW-K LAMBDA
Console-mounted rope winch DGUV Vorschrift 17 (BGV C1)

Capacity 300 kg

The compact rope winch for applications on stages, in studios, theatres, etc.

Features

- State-of-the-art design with galvanized side sections for easy handling.
- Grooved drum for single-layer winding of the steel rope. An 18:1 ratio between drum and rope diameter increases the service life of the rope substantially.
- With spring-loaded rope pressure roller to prevent the unloaded rope from jumping off the drum.
- Gear rated for twice the nominal load.
- Spur gear drive for optimal efficiency and comfortable handling.
- The fitted safety crank with two spring brakes acting independently of each other for safe holding of the load in any position.
- In compliance with DGUV Vorschrift 17 (BGV C1) and DIN 56925. Certified by the German committee for lifting equipment (GS-approval-tested safety).

Optional

- Drum extension for a larger rope capacity.
- Special grooves (several layers).

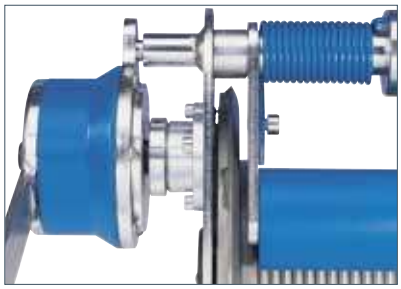

INFO

Pfaff winches are not designed for passenger elevation applications and must not be used for this purpose.

Technical data SW-K LAMBDA

Model	Art.-No.	Capacity kg	Rope diameter[1] mm	Useable rope length 1st layer m	Lift per crank rotation mm	Required crank effort daN	Weight without rope kg
SW-K LAMBDA	30272015	300	6	10	50	18	30
SW-K LAMBDA	30272017	300	6	15	50	18	36

[1]recommended rope: DIN EN 12385 FE-znk 1960 sZ-spa

Dimensions SW-K LAMBDA

Model	SW-K LAMBDA	SW-K LAMBDA
A, mm	379	469
B, mm	310	310
C, mm	340	340
Ø D, mm	139.4	139.4
E, mm	180	270
F, mm	280	280
G, mm	175	265
Ø H, mm	13	13
J, mm	250	250
K, mm	130	130

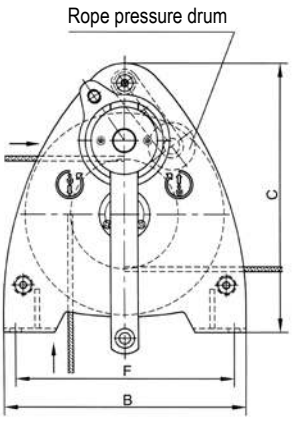

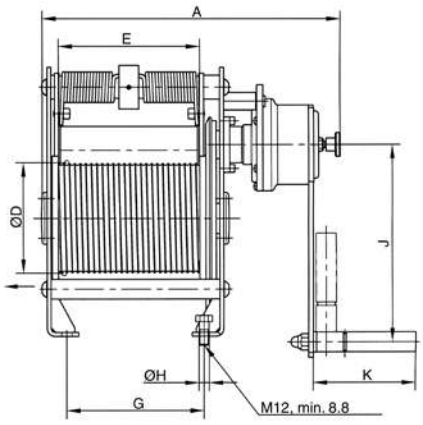

OMEGA
Console-mounted rope winch

Capacity 800 and 1000 kg

Developed for special challenges:
The OMEGA and OMEGA Offshore versions are prepared for manual operation and operation via an external motor-powered drive.

Features

- Removable hand crank.
- Encapsulated gearbox running in oil bath.
- High-quality painting to improve corrosion protection.
- External motorized drive possible (OMEGA Offshore).

Technical data OMEGA

Model	Art.-No.	Capacity 1st layer kg	Capacity top layer kg	Useable rope length 1st layer m	Useable rope length top layer m	Rope diameter mm	Lift per crank rotation mm	Lift per crank rotation top layer mm	Required crank effort daN	Driving torque Mta Nm	Weight without rope kg
OMEGA	192010587	1000	692	1.6	13.1	8[1]	29	42	17	54	approx. 38
OMEGA Offshore	192010589	800	800	1.2	4.3	10[2]	30	35	17	54	approx. 38

[1]recommended rope: DIN EN 12385 SE 1960 N/mm [2]recommended rope: DIN 3069 SE 1770 N/mm²

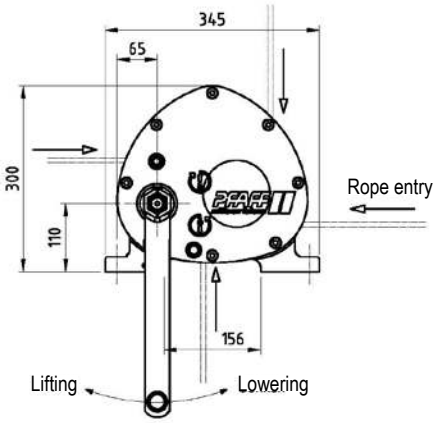

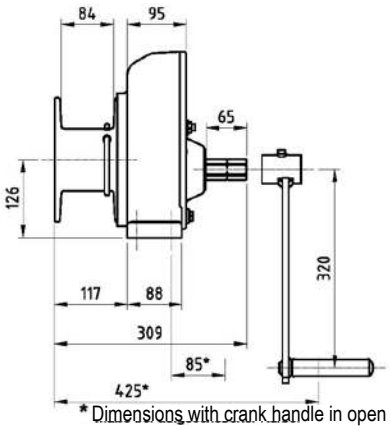

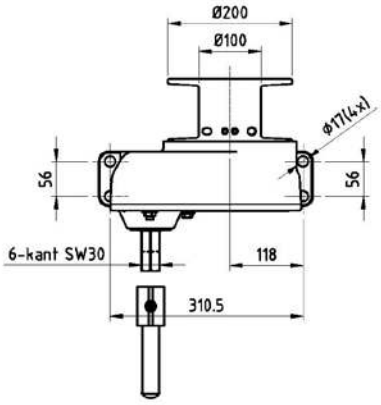

* Dimensions with crank handle in open position

Ex-version available!
We are pleased to send you our new Atex catalogue in PDF format.

DSRB S
Sheave block for rope guidance, equipped with ball bearings

Technical data DSRB

Model	Art.-No.	Classification FEM/ISO	Pulling force in kg at deflection 90°	Pulling force in kg at deflection 180°	Rope diameter mm
DSRB S 90/4	33447103	2m/M5	700	500	3-4
DSRB S 90/6	33447413	1Dm/M1	700	500	5-6
DSRB S 145/7	33447106	1Am/M4	1100	800	7
DSRB S 185/8	33447107	2m/M5	2300	1630	8
DSRB S 270/12	33447111	2m/M5	2500	1800	9-12

All sheaves are available as an individual component on request.

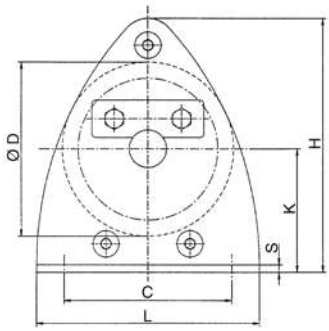

Dimensions DSRB

Model	DSRB S 90/4	DSRB S 90/6	DSRB S 145/7	DSRB S 185/8	DSRB S 270/12
B, mm	85	85	125	138	191
C, mm	90	90	160	195	290
Ø D, mm	90	90	145	185	270
Ø D1, mm	20	25	25	30	40
Ø Dm, mm	80	78	126	160	246
E, mm	62	62	88	106	138
H, mm	134	134	224	273	407
K, mm	65	65	110	135	202
L, mm	120	120	200	245	360
Ø M/M1, mm	9/9	9/9	11.5/13	13.5/15	18/20
S, mm	4	6	6	8	10

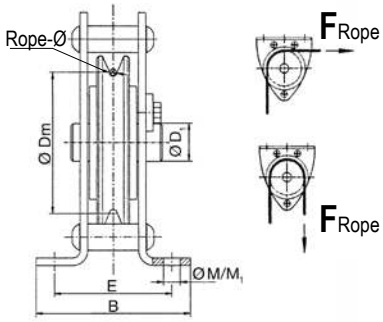

Ex-version on request!

Standard ropes for manual winches

According to DIN EN 12385-4

(formerly DIN 3060 resp. DIN 3069)

Rope diameter	Breaking load of rope min. kN	Art.-No. Rope length 5 m	Art.-No. Rope length 10 m	Art.-No. Rope length 15 m	Art.-No. Rope length 20 m	Capacity clevis end kg
4 mm	10.1	33600405	33600410	33600415	33600420	500
5 mm	15.8	33600505	33600510	33600515	33600520	1000
6 mm	22.8	33600605	33600610	33600615	33600620	1000
7 mm	31.0	33600705	33600710	33600715	33600720	1000

INFO

Additional accessories available on request.

Yale*trac ST*

Cable puller

Pulling force 500 - 3200 daN

The portable Yale*trac ST* cable puller is a versatile tool for pulling, lifting, lowering, tensioning and securing loads over long distances. It has been specially designed for applications in industry, building construction, civil engineering, power line construction, ship building and oil refineries etc. The Yaletrac ST cable puller is almost service free – easy to use and safe.

Cable pullers model Yale*trac ST* feature a housing of dimensionally stable deep-drawn steel plates ensuring a compact and robust design. The hand operating forces have been noticeably optimised for the user by the application of axial ball bearings.

Features

- Stable upright positioning of the unit due to the combination of handle and foot.
- Space-saving telescopic hand lever that can be safely attached to the unit by means of a hook-and-pile fastener. Short handle lever for Y 05 ST not telescopic.
- Overload protection is provided by a shearing pin. Spare shear pins are conveniently located in the carrying handle. A broken pin can be replaced without removing the load.
- Yale*trac ST* uses a special flexible rope. It has six strands with a steel core and is identified by an orange strand. The rope is tapered at one end for easy threading and is fitted with an eye sling hook with safety latch on the other end.
- The parallel arrangement of the clamping system protects the rope by distributing the clamping forces evenly. A long rope advance per each lever stroke increases the working speed.
- Increased service life of the unit due to the use of rubber sleeves which prevent dirt and dust from penetrating into the mechanical equipment of the unit.
- Positioning of the forward and reversing levers in tandem provides a slim design and ensures optimal power transfer.
- A lever disengages the rope clamp system allowing easy and smooth installation of the rope.
- The large opening in the top of the unit allows easy cleaning: simply flush the unit with water and apply motor oil for lubrication and the Yaletrac ST is again ready for use.

Y 10 ST up to Y 32 ST

Optional

- Eye sling hook with safety latch
- Longer ropes
- Drum reel

Technical data Yaletrac ST

Model	Art.-No.	Capacity (WLL) kg	Rope advance per double stroke mm	Lever pull at WLL daN	Lever length mm	Rope diameter mm	Weight without rope kg	Rope weight kg/m
Y 05 ST [1]	192043685	500	20	30	260	6.0	2.8	0.10
Y 10 ST	N02400009	1000	60	23	800	8.4	8.5	0.29
Y 16 ST	N02400010	1600	60	28	790/1190	11.2	15.8	0.53
Y 32 ST	N02400011	3200	40	46	790/1190	16.0	27.2	1.00

[1] see complete scope of delivery

Dimensions Yaletrac ST

Model	Y 05 ST	Y 10 ST	Y 16 ST	Y 32 ST
L, mm	285	435	560	664
H, mm	116	178	205	240
H1, mm	164	235	280	350
B, mm	48	61	86	96
B1, mm	70	94	125	123

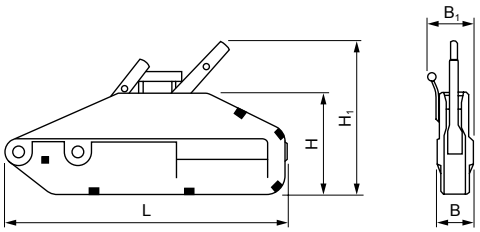

MODEL UPRATING

NOW ALSO AVAILABLE:
500 daN PULLING FORCE!
FOR MOBILE USE

Optional for Yale*trac 05 ST*
Useful shoulder bag

Yale*trac 05 ST*
Assembled and ready for operation (installed)

Y 05 ST

Scope of delivery

- Assembled and ready for operation (installed
- Hand lever
- Wire rope Ø 6 mm, 10 m
- Eye sling hook with safety latch
- Webbing sling HSE 00500

Optional

- Shoulder bag

Yaletrac Cable puller

Pulling force 800 - 3200 daN

It has a light weight, compact, high tensile aluminium alloy housing with a large flat bottom surface for increased stability in horizontal as well as vertical working position.

Features

- Forward and reversing levers in tandem provide slim design and assure power transfer along the centre line.
- Overload protection is by a shearing pin in the forward lever. Spare shear pins are conveniently located in the carrying handle or operating lever. A broken pin can be replaced without removing the load.
- A lever disengages the rope clamp system allowing easy, smooth installation of the rope.
- Yaletrac uses a special flexible rope. It has six strands with a steel core and is identified by an orange strand. The rope is tapered at one end for easy threading and fitted with an eye sling hook with safety latch on the other end.
- The parallel arrangement of the clamping system protects the rope by distributing the clamping forces evenly. A long rope advance per each lever stroke increases the working speed.
- The large opening in the top of the unit allows easy cleaning: simply flush the unit with water, apply motor oil for lubrication and the Yaletrac is again ready for use.

Optional

- Eye sling hook with safety latch
- Longer ropes
- Drum reel

INFO

Yale hoists and trolleys are not designed for passenger elevation applications and must not be used for this purpose.

Complementary products available like cable grips (page 111), pulley blocks (page 110) and textile slings (pages 248 - 253).

Technical data Yaletrac

Model	Art.-No.	Capacity (WLL) kg	Rope advance per double stroke mm	Lever pull at WLL daN	Lever length mm	Rope diameter mm	Weight without rope kg	Rope weight kg/m
Y 08	N02409053	800	60	24	800	8.4	7	0.29
Y 16	N02409054	1600	60	30	790/1190	11.2	14	0.53
Y 32	N02409055	3200	40	50	790/1190	16.0	21	1.00

Dimensions Yaletrac

Model	Y 08	Y 16	Y 32
L, mm	430	545	680
H, mm	168	190	230
H1, mm	240	270	330
B, mm	60	72	91
B1, mm	–	97	110

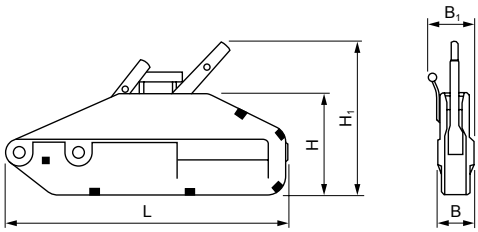

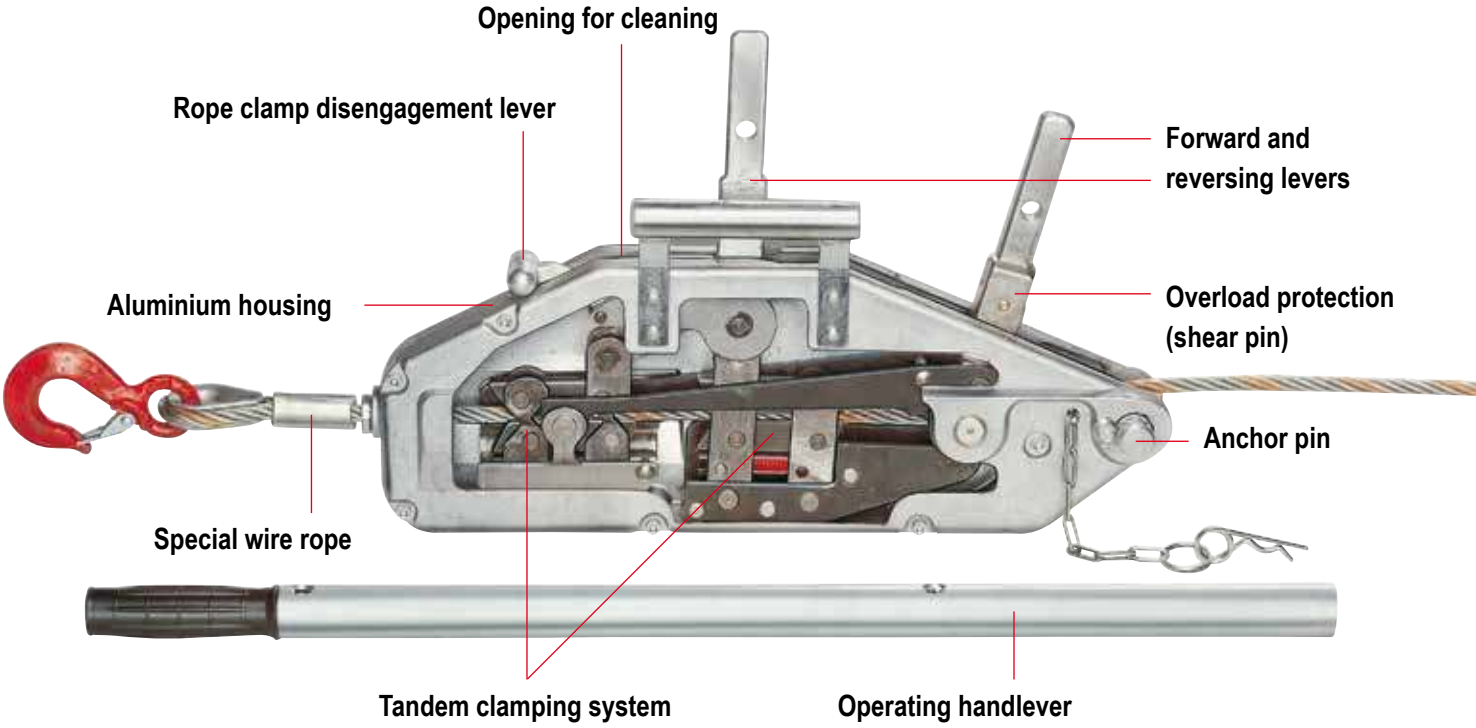

Pulley blocks, hinged, with single steel sheave

Capacity 1000 - 6400 kg

One side of the Yale pulley blocks is hinged and can be opened for easy and quick positioning of the wire rope on the sheave. It can also provide a quick and versatile rigging point or redirect a wire rope.

Features

- Swinging the hook in the direction of pull securely locks the pulley block.
- The high quality cast steel sheaves have machined grooves and are fitted with Permaglide® bushes.

INFO

When choosing and classifying pulley blocks, take the “Grundsätze für Seiltriebe” DIN 15020 into consideration.

Technical data pulley blocks

Model	Art.-No.	Capacity kg	Roller diameter mm	Rope diameter mm	Weight kg
Pulley blocks 1000	N46000005	1000	85	7	3.3
Pulley blocks 2000	N46000003	2000	150	13	8.9
Pulley blocks 3200	N46000004	3200	180	15	15.5
Pulley blocks 6400	N46000006	6400	210	18	26.5

Dimensions pulley blocks

Model	Pulley blocks 1000	Pulley blocks 2000	Pulley blocks 3200	Pulley blocks 6400
B, mm	118	199	230	270
B1, mm	76	92	108	116
B2, mm	17	24	28	35
C, mm	23	27	31	42
Ø D1, mm	85	150	180	210
Ø D2, mm	105	190	220	260
L, mm	305	425	496	655
L1, mm	200	263	295	375
L2, mm	23	30	40	47
R, mm	4	7	9	10

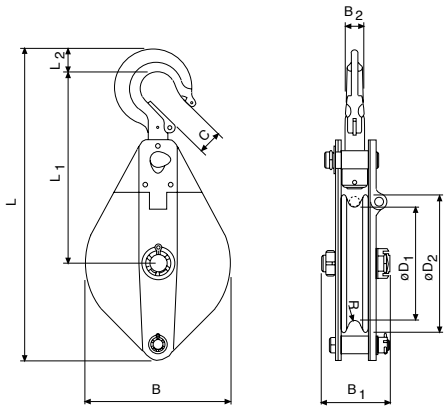

INFO

Yale hoists and trolleys are not designed for passenger elevation applications and must not be used for this purpose.

LMG Cable grip

Pulling force 2000 - 5000 daN

The LITTLE MULE® cable grip is a device for gripping, pulling and tensioning uncoated wire ropes, cables and metal rods in all forms up to a tensile strength of 1770 N/mm² but is dependant on the diameter and surface condition.

The parallel jaws provide a firm, non-slip grip without causing damage to the wire rope. A special spring-loaded guide prevents the grip from dropping off the wire rope and allows instant release without jamming.

LMG I-X und LMG II-X are supplied with grooved jaws and are suitable for wire ropes with a tensile strength of up to 1960 N/mm², but is dependant on the rope diameter and surface condition.

Technical data LMG

Model	Art.-No.	Pulling force daN	For rope diameter Ø mm	Eye opening mm	Weight kg
LMG I	N02606516	2000	4.5 - 15	31 x 44	1.6
LMG I-X	N02608042	2000	5 - 15	31 x 44	1.6
LMG II	N02606517	3000	8 - 20	31 x 44	2.9
LMG II-X	N02608043	3000	8 - 20	31 x 44	2.9
LMG III	N02607609	5000	18 - 32	66 x 93	9.5

INFO

Yale hoists and trolleys are not designed for passenger elevation applications and must not be used for this purpose.

Steel rope for manual and electric winches

All electric winches are supplied without load bearing mechanisms as standard. To ensure safe operation an optimum rope design, optimum length and associated fastening elements (hooks, shackles) are selected.

We recommend to choose wire ropes on the basis of design, type of construction and strength to suit the intended use and frequency of use. The features of the different types of rope design are as follows:

Breaking load
→ Load bearing capacity, strength of the rope

Bending fatigue + flexibility
→ Service life

External wear
→ Stability of the outer strands

Torsion characteristics
→ Lifting of guided or unguided loads

INFO

The use of plastic-coated steel wire ropes with lifting equipment is not permitted.

To meet individual requirements we can provide assistance for the selection of length, diameter and type of the rope, as well as a fastening equipment (thimbles, hooks, rope clips, etc.).

Handling

Our product range includes winches for lifting, pulling and moving of loads. In combination to our winches the following rope types apply:

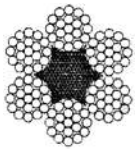

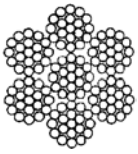

Standard design
6 x 19 + FE 1770 N/mm²

Manual winch rope with fiber inlay 3 - 12 mm Ø

Galvanized or stainless steel in mat. 1.4401
Nominal strength 1570 N/mm² (low breaking load)

- not non-twisting
- crosslay type of construction
- low-tension
- lifting rope for infrequent actuation
- rugged and widely resistant

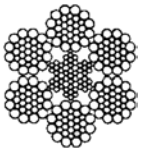

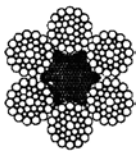

Warrington-Seale
6 x 36 WS + SES (FE) 1770 N/mm²

Manual and electric winch rope in parallel type of construction 10 - 28 mm Ø

Galvanized, with fiber or steel inlays as options

- highly flexible
- high breaking load
- average number of reversed bending stresses

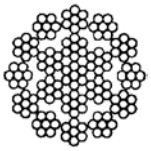

Non-rotating special rope
SE-znk - 1960 N/mm²

Standard rope for electric winches, non-rotating spiral strand rope 3 - 13 mm Ø

Galvanized

- balanced characteristics
- lifting rope for unguided single rope suspension elements
- lifting rope for large lifting heights with multiple rope suspension elements
- not to be used with a swivel
- high strength
- high bending fatigue characteristics

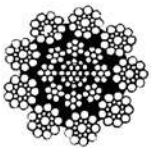

Heavy duty winch rope

Electric winch rope with plastic-coated steel core in double-parallel type of construction 6 - 30 mm Ø

Bright and greased, not non-twisting

- special rope for frequent bending stress reversals and long use
- to be used only with matching rope sheaves and drums
- optimized break loads due to higher fill factor

Rope fasteners/rope connections

The safe functioning of the rope drive depends to a large extent on the rope fastenings on the winch and on the load. Rope connections and ropes themselves have to be checked at regular intervals by competent persons.
The following rope connections are permissible for use with lifting equipment:

Non-releasable rope connections

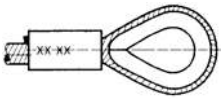

Aluminium press-on connection with thimbles

in combination with safety eye hooks or screw shackles provide a simple and safe means of suspending loads.

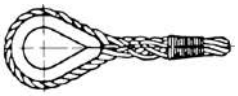

Splice connections (uncoated)
in combination with thimbles, hooks, etc.

In the most unfavourable situation, splice connections can lead to a reduction in the breaking load of the rope line of up to 40 %.

Releasable rope connections

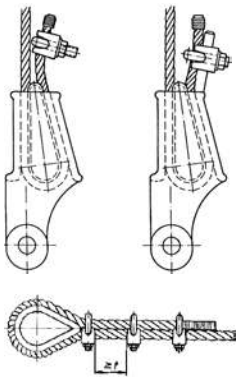

Rope clips

- The end which is not under load must never be fastened to the load-bearing line.
- The length of the unloaded rope end should be at least 20 times the diameter of the rope and not less than 150 mm.
- Clips may no longer be used once the rope has worn by more than 10 %.
- **Wire rope clamps may not be used for rope connections for lifting equipment, with the exception of fastening equipment which is manufactured for none-recuring, special purposes**!

Handling of ropes – Unwinding

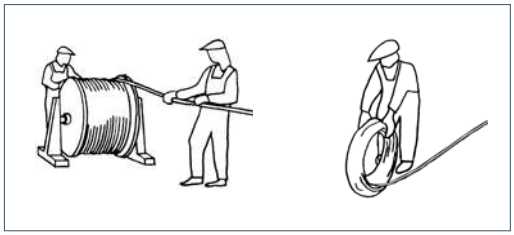

RIGHT

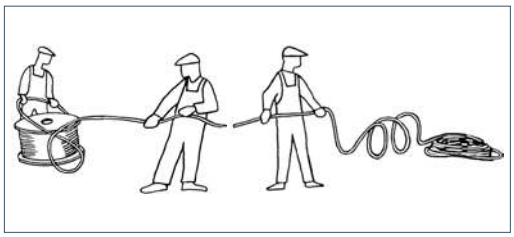

WRONG

Care of ropes

”Running ropes” in particular will only offer optimum service lives if they are well lubricated. The use of steel ropes without grease will cause them to wear quickly and the load bearing mechanism will have to be replaced early.

INFO

Pressed and splice connections may only be produced by specialist firms or rope manufacturers.

Notes on the installation of winches

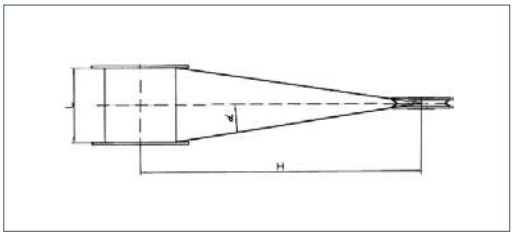

The distance between rope drum and sheave must be selected in a way that the maximum deflection angle for the type of rope used is not exceeded:

Standard rope - Deflection angle < 3°
(Minimum distance = Drum width x 10)

Special rope - Deflection angle < 1,5°
(Minimum distance = Drum width x 20)

- To prevent the wire rope from becoming slack when unloaded it should always have an additional rope weight when used with lifting equipment
- Guided loads must be monitored with a slack rope cut-out.
- To prevent the rope from becoming damaged, steel wire ropes must never be guided
  - over edges
  - over deflection radii which are too small or
  - over rope sheaves with grooves which are too small.
- High dynamic forces can lead to sudden breaks or crashes of the load. It is therefore imperative that loads are never brought to a dead stop (“on block”) and that loads are never allowed to drop into the rope.

The image shows the winch RPE
up to 1.0 t

Yale *RPE*

Electric winch

Capacity 250 - 2000 kg

Winches series RPE are designed for performance, efficiency and safety and offer many advantages and options. RPE's compact, practical cube design and universal rope lead-offs allow individual applications in almost any position for lifting and pulling loads.
The winches are designed to DIN 15020, classification 1 Bm/M3 and the EC machinery directives.

Every winch is factory tested with overload. The units are supplied with a test certificate showing the unit's serial-no. and an operating instructions manual which contains a manufacturer's declaration.

Features

- Compact dimensions due to internal brake motor.
- Standard: 400 V/230 V, 3 Ph, 50 Hz
  or 230 V, 1 Ph, 50 Hz
- Protected to IP 55
- Insulation class F
- Adjustable slip clutch to protect the winch from overloading standard for RPE 10-6 and RPE 20-6.
- Spur gear transmission with helical first gear ensures smooth motion. Lubricated by grease and can, therefore, be used in any position.
- Spring pressure disc brake incorporated in the motor holds the load secure even in the event of a power failure.
- Plain rope drum standard.The rope is secured to the drum in a recess so that the rope can be wound onto the drum in several layers without damage.
- 42 V low voltage control (incl. push-button with emergency-stop and 2 m control cable) or without controls.

Rope attachment

Spring pressure disc brake

Brake motor

INFO

When selecting the length of the rope please bear in mind that a minimum of 2 - 3 windings have to remain on the drum!

The wire rope, if ordered, comes dismounted, and is to be mounted onto the drum by the user.

Please note, the single-phase winches generate a higher noise level than those with three-phase motors!

Optional

- Different drum designs (XL) extended to accommodate longer rope.
- Machined grooved drums for better rope reeling.
- Drums with separation web and extra rope outlets for working with two or more ropes.
- Geared limit switches to limit rope motion in both directions (in combination with 42 V low voltage control).
- Slack rope switch to automatically stop the winch when rope tension eases e.g. when the load touches down (in combination with 42 V low voltage control).
- Frequency converter for stepless speed control.
- Radio remote control (in combination with 42 V low voltage control).
- Other operating voltages on request.
- Motor brakes with manual release.
- Special coatings or zinc plated finish.

The image shows the winch RPE 20-6 with the grooved drum (optional).

Single-phase A.C. motor

Geared limit switches

Gearbox with slip clutch

Different drum designs

INFO

Also available as zinc-plated version on request!

Technical data RPE

Model	Capacity kg	Lifting speed m/min 1st layer	Lifting speed m/min top layer	Rope layers max.	Rope diameter mm	Motor kW	Motor rating ED	Weight without rope kg L	Weight without rope kg XL
RPE 2-13 L	250	10.2	13.2	4	4	0.55	40 %	40	48
RPE 5-6 L	500	4.6	6.6	4	6	0.55	40 %	41	49
RPE 5-12 L	500	8.7	12.6	4	6	1.1	40 %	47	54
RPE 10-6 L[1]	1000	5.1	6.5	3	8	1.1	40 %	89	105
RPE 20-6[1]	2000	5.2	7.6	3	12	2.2	40 %	213	235

[1]Adjustable slip clutch as standard

Plain drum rope capacity

Model	Capacity top layer kg	Drum size	Useable rope length max. m 1st layer	2nd layer	3rd layer	4th layer
RPE 2-13[1]	250	1[1]	11.1	24.5	39	54
RPE 5-6[1]	500	1[1]	7.4	16.9	27	38
RPE 10-6[1]	1000	1[1]	10.1	23.0	37	–
RPE 20-6	2000	1	13.2	30.3	49	–
RPE 2-13 L	250	2	16.8	36.4	57	80
RPE 5-6 L	500	2	11.3	25.2	40	57
RPE 5-12 L	500	2	11.3	25.2	40	57
RPE 10-6 L	1000	2	15.8	35.2	56	–
RPE 20-6 L	2000	2	20.6	46.1	74	–
RPE 2-13 XL	250	3	44.3	94.1	148	200
RPE 5-6 XL	500	3	30.0	65.5	105	149
RPE 5-12 XL	500	3	65.0	65.5	105	149
RPE 10-6 XL	1000	3	30.7	67.0	107	–
RPE 20-6 XL	2000	3	34.1	74.9	120	–

[1]available on request only!

Grooved drum rope capacity (recommended for single layer operation)

Model	Capacity top layer kg	Drum size	Useable rope length m 1st layer	Useable rope length m max.
RPE 2-13 R[1]	250	1[1]	8.8	43
RPE 5-6 R[1]	500	1[1]	6.2	33
RPE 10-6 R[1]	1000	1[1]	8.2	30
RPE 20-6 R	2000	1	12.0	44
RPE 2-13 LR	250	2	13.3	64
RPE 5-6 LR	500	2	9.5	49
RPE 5-12 LR	500	2	9.5	49
RPE 10-6 LR	1000	2	12.9	47
RPE 20-6 LR	2000	2	16.8	61
RPE 2-13 XLR	250	3	35.3	165
RPE 5-6 XLR	500	3	25.7	128
RPE 5-12 XLR	500	3	25.7	128
RPE 10-6 XLR	1000	3	25.2	89
RPE 20-6 XLR	2000	3	27.9	99

[1]available on request only!

INFO

When selecting the length of the rope please bear in mind that a minimum of 2 - 3 windings have to remain on the drum!

Yale hoists and trolleys are not designed for passenger elevation applications and must not be used for this purpose.

Dimensions RPE

Model	RPE 2-13 [1] RPE 5-6 [1]	RPE 2-13 L RPE 5-6 L RPE 5-12 L	RPE 2-13 XL RPE 5-6 XL RPE 5-12 XL	RPE 10-6 [1]	RPE 10-6 L	RPE 10-6 XL	RPE 20-6	RPE 20-6 L	RPE 20-6 XL
A, mm	405	405	405	525	525	525	670	670	670
B, mm	375	375	375	485	485	485	550	550	550
C, mm	18	18	18	25	25	25	36	36	36
D_{TR}, mm	76	76	76	108	108	108	146	146	146
D max, mm	104	118	118	148	148	148	224.4	224.4	224.4
DA, mm	150	150	150	180	180	180	245	245	245
E, mm	338	428	865	450	575	902	619	784	1.084
F, mm	210	300	737	270	395	722	360	525	825
G, mm	260	350	787	345	470	797	480	645	945
H, mm	290	380	817	380	505	832	540	705	1.005
I, mm	11	11	11	13	13	13	23	23	23
K, mm	250	250	250	340	340	340	401	401	401
L, mm	125	125	125	170	170	170	215	215	215
M, mm	6	6	6	10	10	10	15	15	15
N, mm	33	33	33	47.5	47.5	47.5	72.5	72.5	72.5
O, mm	194	284	721	250	375	702	335	500	800
P, mm	19	19	19	24	24	24	34	34	34
Q, mm	13	13	13	19	19	19	26	26	26
R, mm	125	125	125	170	170	170	135	135	135
S, mm	4	6	6	8	8	8	12	12	12
α 1, °	130	130	130	145	145	145	153	153	153
α 2, °	110	110	110	125	125	125	136	136	136
α 3, °	40	40	40	50	50	50	64	64	64
β 1, °	150	150	150	155	155	155	147	147	147
β 2, °	90	90	90	100	100	100	107	107	107
β 3, °	80	80	80	83	83	83	83	83	83

[1] available on request only! Dimensions for models with optional features are available on request!

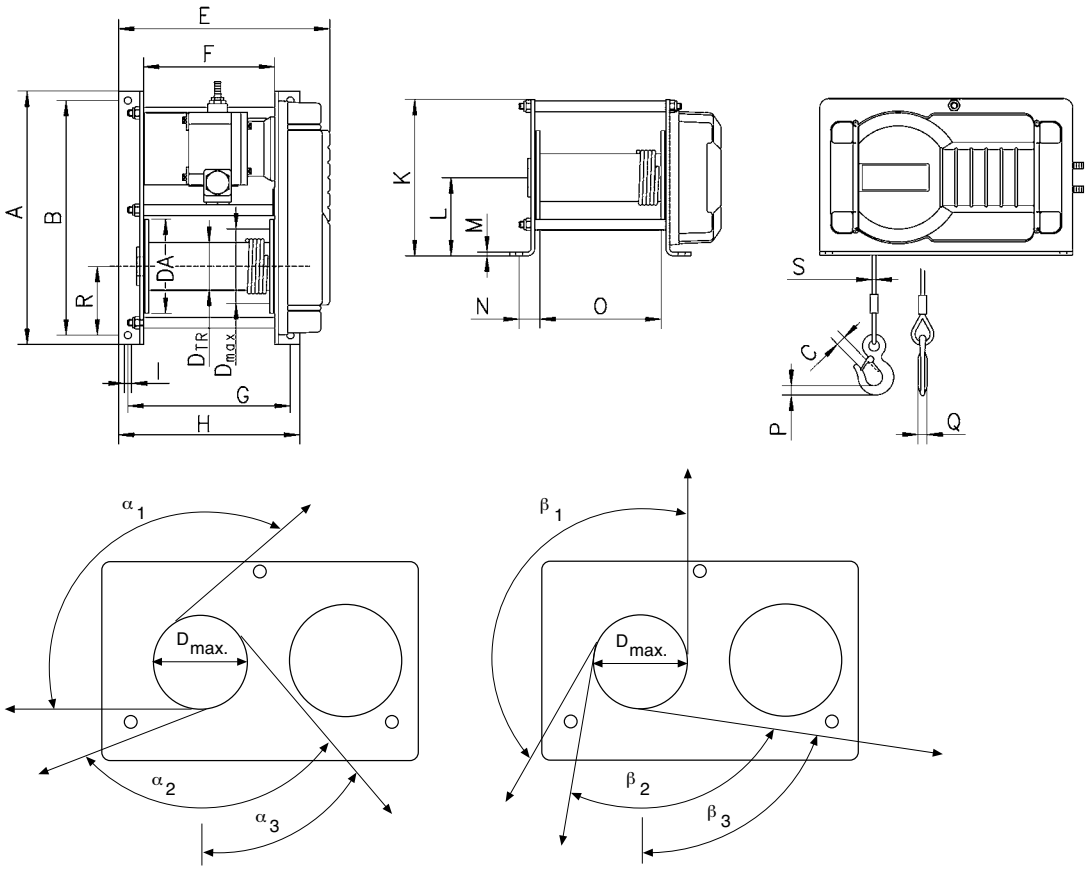

Rope lead-offs for electric winch RPE

DSRB S
Sheave block for rope guidance, equipped with ball bearings

Technical data DSRB S

Model	Art.-No.	Classification FEM/ISO	Pulling force in kg at deflection 90°	Pulling force in kg at deflection 180°	Rope diameter mm
DSRB S 90/4	33447103	2m/M5	700	500	4
DSRB S 90/6	33447413	1Dm/M1	700	500	4
DSRB S 145/5	33447104	4m/M6	1100	800	5
DSRB S 145/6	33447105	2m/M5	1100	800	6
DSRB S 145/7	33447106	1 Am/M4	1100	800	6
DSRB S 185/8	33447107	2m/M5	2300	1630	8
DSRB S 185/9	33447108	1Am/M4	2300	1630	9
DSRB S 270/12	33447111	2m/M5	2500	1800	12

All sheaves are available as an individual component on request.

Dimensions DSRB S

Model	DSRB S 90/4	DSRB S 90/6	DSRB S 145/5	DSRB S 145/6	DSRB S 145/7	DSRB S 185/8	DSRB S 185/9	DSRB S 270/12
Art.-No.	33447103	33447413	33447104	33447105	33447106	33447107	33447108	33447111
B, mm	85	85	125	125	125	138	138	191
C, mm	90	90	160	160	160	195	195	290
Ø D, mm	90	90	145	145	145	185	185	270
Ø D1, mm	20	20	25	25	25	30	30	40
Ø Dm, mm	80	78	125	125	126	160	162	246
E, mm	62	62	88	88	88	106	106	138
H, mm	134	134	224	224	224	273	273	407
K, mm	65	65	110	110	110	135	135	202
L, mm	120	120	200	200	200	245	245	360
Ø M/M1, mm	9/9	9/9	11.5/13	11.5/13	11.5/13	13.5/15	13.5/15	18/20
S, mm	4	4	6	6	6	8	8	10

Ex-version on request!

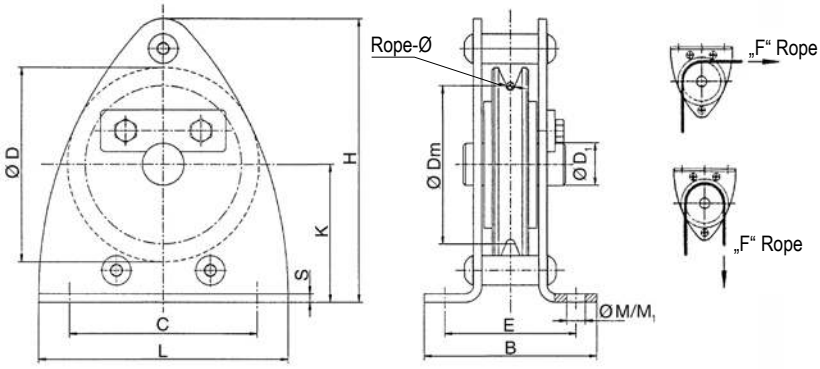

BETA SL
Electric winch

Capacity 250 - 2000 kg

Electric winches of the BETA SL range are used for lifting, towing and positioning of loads. The proven technology and specified equipment features make the winch the ideal product for standard applications.

Features

- The electrically released spring pressure disc brake safely holds the load also in the event of a power failure.
- Powerful three-phase AC drives for multi-range voltage 400V – 50Hz. Motor type of enclosure IP 55, duty factor 40 % ED.
- Electronic overload protection from 1000 kg lifting load as standard.
- The maintenance-free, oil lubricated gearbox has quiet running characteristics due to milled and ground gears with helical teeth.
- Standard rope drum of grooved design, with large rope capacity.
- Variable rope lead-in.
- Contactor control (incl. gear limit switch).
- In accordance with DGUV regulation 55 (winches, lifting and pulling equipment).

Also available at short notice with the following options:

- **Rope pressure roll**
  Supports the tidy coiling of the rope, especially with high lifting heights.
- **Slack rope switch**
  Prevents unwanted uncoiling if the wire rope is not under load.
- **Control switch with 3 m control cable**
  Greater freedom of movement for the user, better view of the working area of the wire rope winch.
- **Frequency converter (SL 1 - SL 3)**
  Infinitely variable rope speed controlled via potentiometer, control range 20-87 Hz (SL 3 = 10-50 Hz). The frequency converter allows loads to be moved gently and sensitively..

Optional: Frequency converter
(For infinitely variable speed regulation)

Technical data BETA SL

Model	Art.-No.	Size	Capacity 1st layer	Lifting speed 1st layer	Rope diameter [3]	Motor	Classification	Useable rope length 1st layer	Useable rope length top layer
			kg	m/min	mm	kW	FEM/ISO	m/min	m/min
BETA-SL0-250-2,5-4-46,7-1-GE-St	40063758	SL 0	250	2.5	4	0.25	1Bm/M3	7	46.7
BETA-SL0-250-5,0-4-46,7-1-GE-St	31140006	SL 0	250	4.7	4	0.37	1Bm/M3	7	46.7
BETA-SL1-500-7,1-6-48,9-1-GE-St	40062946	SL 1	500	6.8	6	0.75	1Am/M4	6.7	48.9
BETA-SL1-630-7,1-6-48,9-1-GE-St	40062989	SL 1	630	6.8	6	0.75	1Bm/M3	6.7	48.9
BETA-SL2-980-6,3-9-77,5-1-GE-St	40062990	SL 2	980	6.0	9	1.1	1Am/M4	11	77.5
BETA-SL2-1250-6,3-9-64,0-1-GE-St	40062993	SL 2	1250	6.0	9	1.1	1Am/M4	11	77.5
BETA-SL3-2000-6,8-12-73,8-1-GE-St	40062996	SL 3	2000	6.8	12	2.2	1Bm/M3	10	74.5

[3] recommended rope: DIN 3069 FE-znk 1960 sZ-spa

Dimensions BETA SL

Model	BETA-SL0-250 2,5-4-46,7-1-GE-St	BETA-SL0-250 5,0-4-46,7-1-GE-St	BETA-SL1-500 7,1-6-48,9-1-GE-St	BETA-SL1-630 7,1-6-48,9-1-GE-St	BETA-SL2-980 6,3-9-77,5-1-GE-St	BETA-SL2-1250 6,3-9-64,0-1-GE-St	BETA-SL3-2000 6,8-12-73,8-1-GE-St
A, mm	185	185	215	215	270	270	320
B, mm	170	170	300	300	400	400	510
Ø C, mm	12	12	13.5	13.5	18	18	22
F, mm	389	389	740	750	920	930	1070
G, mm	200	200	340	340	465	465	570
H, mm	241	241	340	345	475	480	614
K, mm	432	–	–	–	–	–	–
L, mm	180	180	200	200	250	250	300
Ø M, mm	64	64	86	86	175	175	175

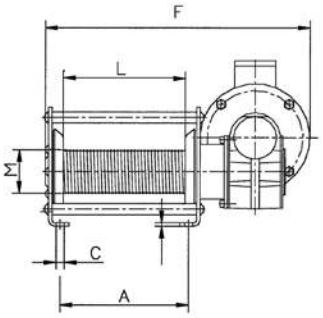

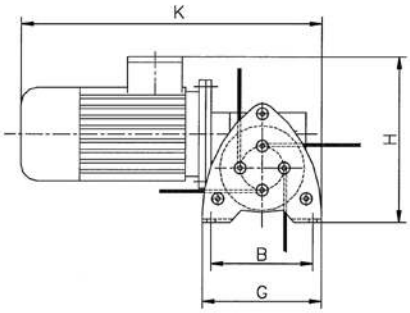

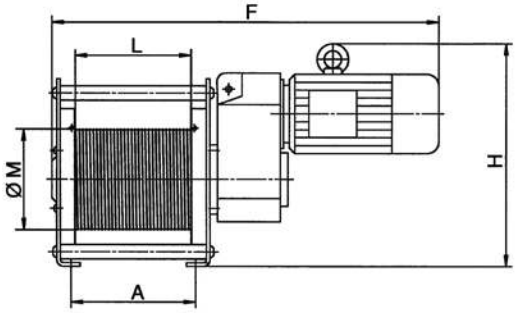

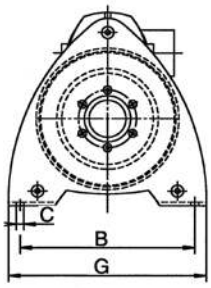

INFO

Pfaff winches are not designed for passenger elevation applications and must not be used for this purpose.

THETA
Electric winch

Capacity 100 kg

The compact Pfaff-silberblau THETA series offers reliable safety, besides being suitable for a wide range of applications and very easy to use. Its high safety standard is achieved, amongst other things, by a mechanical double safety drum brake, separate from the drive, for safe and firm holding of the load.
Factory-specified features make this safety electric wire rope winch interesting for many applications, such as construction sites, in building technology or sports facilities – and thus also for individuals, craftsmen, local councils and construction yards. The Pfaff-silberblau THETA wire rope winch is operated with a supply voltage of 230 V (50 Hz).

Features

- Compact design.
- Two independently acting brakes.
- Ready for use with control/limit switch.
- Connection cable with plug.
- Test and maintenance friendly.
- Made in Germany.
- Available from stock and ready for immediate use after delivery.
- In accordance with the accident prevention regulations DGUV V54 (BGV D8) with special release for static suspension of loads above persons incl. expert.

Technical data THETA

Model	Art.-No.	Capacity kg	Rope speed m/min	Motor kW	Rope diameter mm	Rope capacity m
THETA	192054528	100	3	0.12	4	10

Dimensions THETA

Model	THETA
Art.-No.	192054528
A, mm	277
B, mm	150
Ø C, mm	12
D, mm	217
E, mm	50
F, mm	476
G, mm	190
H, mm	348
I, mm	86
Ø M, mm	72

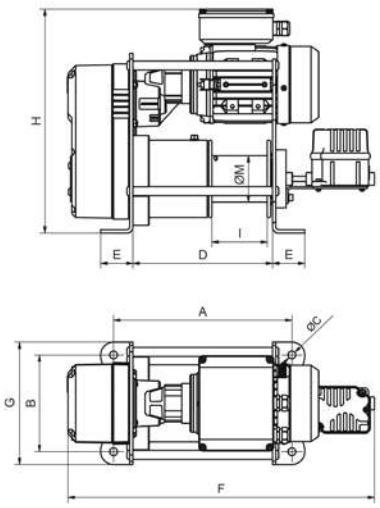

Endless winch up to 500 kg!

STANDARD
This image shows the Yale Mtrac winch with standard equipment

PATENTED*

BI-DIRECTIONAL ACTUATOR

FOR BI-DIRECTIONAL LIFTING

*German Patent DE 10 2012 100 099

Yale *Mtrac*®

Endless winch

Capacity 66 - 500 kg

(two-fall design up to 1000 kg, optional)

The Yale *Mtrac*® endless winch combines state-of-the-art industrial design with technical innovation to solve a specific customer need – the need for a safe and simple handling solution for mobile applications.
We did just that. Because the rope of the endless winch is not collected during operation, there is no limit to the lifting height and traction length when using this product. And, with a full offering of wire ropes and accessories, this winch can be used in virtually any application requiring a hoist., e.g. on construction sites, in maintenance and assembly, in wind mills and power supply, water and utility sector, overhead line maintenance, etc.

Features

- Control pendant (IP 65-type of enclosure) is connected via a control cable.
- Standard power cable has a length of 1.0 m and is fitted with a CE connector plug (or a Schuko-plug.
- 42 V low-voltage control.
- Ergonomic, fitted carrying handle features a comfortable plastic grip.
- Mounting feet fixed on the housing for easy set up.
- Standard operating voltagesof 400 V, 3 Ph, 50 Hz or 230 V, 1 Ph, 50 Hz.
- Galvanized, high-density steel rope is 10 m long (dia. 6.5 mm) and features a safety hook on one end as well as a rounded, plastic-coated tip at the loose end.
- Two spring buffers with adjusting rings can be attached to the wire rope to set the limit switches for both upward and downward movement.
- Drive sheave is made of especially hardened steel designed to ensure long service life.
- The patented (German Patent DE 10 2012 100 099) bi-directional actuator ensures the rope is safely guided and securely held in place.
- Slip clutch is located outside of the load path for added safety.
- Limit switches ensure safe cut-out for the upper and lower hook positions.
- Electromagnetic brake holds the load safely, even in the event of a power failure.
- Winch is classified up to 1 Bm/M3 acc. to FEM/ISO.
- Winch is protected up to IP 55.

FEATURES

PATENTED* BI-DIRECTIONAL ACTUATOR

The Yale *Mtrac* endless winch features a unique bi-directional actuator that allows the winch to move the rated load on both ends of the rope. A hook can be fitted on the unloaded rope end (as an option) thus eliminating no-load motions. How does it work? Once the load has reached the top position, the unloaded rope end with the other hook is automatically in the bottom position and a new load can be picked up immediately. The lifting frequency is doubled as the two falls can be evenly loaded alternately with the rated load.

*German Patent DE 10 2012 100 099

READY TO USE

Each winch leaves our factory as a complete plug and play unit.
The control cable with control pendant is connected, as is the power supply cable with the plug. The standard design also features a wire rope complete with fitted safety hook. The carrying handle is included as standard and load-bearing feet are provided on the lower part of the housing.

STATE-OF-THE-ART INDUSTRIAL DESIGN

A compact and state-of-the-art design was at the focus of the Yale *Mtrac*. The housing is made of low-pressure, die-cast aluminum and the high-strength, glass-fiber reinforced plastic covers ensure low weight and outstanding rigidity. A carrying frame, available as an option, allows for easy, two-person transport and provides additional protection against damage when moving the unit or operating it in rough conditions.

VERSATILE APPLICATION

Mtrac winches can be used vertically, at an angle or horizontally for versatility depending on your application. Optionally, the load capacity can be doubled with two-fall reeving. Bolting points on the housing allow the customer to attach the winch in a way that best suits their application.

PROVEN TECHNOLOGY

Mtrac winches include reliable and proven Yale technology. The oil-bath lubricated and case-hardened gearbox has a helical gearing for smooth operation and a long service life. IP 55-rated motor enclosure ensures reliable operation of the winch for both indoor and outdoor applications.

BEST-IN-CLASS SAFETY

Standard winch models feature 42 V low-voltage control with built-in limit switches designed to stop the hoist when the hook has reached the upper or lower position. The operator can define the limit switch positions by simply relocating the spring buffers on the rope. The winch is also protected against overload by means of a slip clutch that is designed to guarantee a permanent connection between the load and the brake.

SIMPLE MAINTENANCE

Yale *Mtrac* winches are easy to service. Units are designed with a modular structure with all critical parts easily accessible. Re-adjusting the slip clutch and inspecting the brake is quick and easy as well. In addition, the handle, or carrying frame, can be quickly and easily assembled and removed.

ERGONOMIC DESIGN

Standard units have a comfortable plastic grip that allows for convenient one-person transport. The optional carrying frame features a grip on each handle, making two-person transport easy. And, because of the rounded housing, operator injury is minimized.

STANDARD
This image shows the Yale Mtrac winch with standard equipment.

Capacity up to 1000 kg

TWO-FALL DESIGN

with optional components such as suspension hook and bottom block.

Optional

BI-DIRECTIONAL LIFTING

To realize the full potential of this winch, operators can utilize the bi-directional actuator. Simply fit an additional hook at the loose rope end to take advantage of this unique feature. Once the hook is in place, the unit can be used in bi-directional lifting mode (two-hook mode). The actuator is mounted in the interior of the winch and ensures the rope smoothly runs in the drive sheave. It also extends the pressure surface of the rope on the drive sheave for safe friction contact. The two load falls are designed to alternately carry the rated load.

CARRYING FRAME

The carrying frame on the Yale Mtrac can be installed either at the top or at the bottom on the unit. It is ergonomically designed with plastic grips that ensure hand-friendly handling and carrying of the winch by two people. The carrying frame cannot be used as a load-bearing component; it is exclusively intended to protect the housing, e.g. while working, during storage or while transporting or carrying the winch. Two carrying frames can also be used (one at the top and one at the bottom).

CONNECTION TO TROLLEYS

If low headroom is required, the Yale Mtrac winch can be easily converted from the standard hook connection to a trolley mount using a Yale trolley. Manual and power-driven trolleys available on request.

Yale *Mtrac* winches with two carrying frames (optional) are extremely well protected and can be safely operated in any position.

The accessories for the two-part reeved option double the load capacity.

Optional

- The transport and carrying frames are designed to protect the housing.
  They must not be used as load-bearing components!
- Two-part reeving configuration doubles the load capacity.
- Additional hook kit for bi-directional lifting.
- Special voltages on request.
- Steel wire ropes of various lengths.
- Manual and electric trolleys.
- Frequency converter for variable speed control or smooth starting.
- Operating hours counter to determine the remaining service life and number of switching operations.
- Radio remote control with extended operation range.
- Varying lengths for power and control cables.
- Stainless steel wire ropes (with shorter service life than standard).

PATENTED*

BI-DIRECTIONAL ACTUATOR

FOR BI-DIRECTIONAL LIFTING

*German Patent DE 10 2012 100 099

Optional
Radio remote control

BI-DIRECTIONAL LIFTING

This image shows the Yale Mtrac's optional second hook that allows for bi-directional lifting operation.

The hooks of the two rope falls can be alternately loaded with 100 % rated load.

BI-DIRECTIONAL LIFTING

LIMIT SWITCHES AND LIMIT SWITCH ACTUATOR

The spring buffers attached to the rope trip the limit switch actuator when they contact the paddle, which in turn actuates the micro-switches that stop the hoisting motion (via the low voltage control).

Technical data YaleMtrac

Model	Art.-No.	Single fall version Standard		Double fall version Optional		Motor	Operating voltage
		Capacity kg	Lifting speed m/min	Capacity kg	Lifting speed m/min	kW	
YMT 1-15	192025166	100	15	200	7.5	0.37	230 V/1 Ph/50 Hz
YMT 3-5	192025170	300	5	600	2.5	0.37	230 V/1 Ph/50 Hz
YMTF 0,6-30	192025175	66	30/7.5	130	15/3.7	0.37/0.09	400 V/3 Ph/50 Hz
YMT 1-30	192025171	100	30	200	15	0.55	400 V/3 Ph/50 Hz
YMTF 2-10	192025176	200	10/2.5	400	5/1.3	0.37/0.09	400 V/3 Ph/50 Hz
YMT 3-10	192025174	300	10	600	5	0.55	400 V/3 Ph/50 Hz
YMT 5-5	192053140	500	5	1.000	2.5	0.55	400 V/3 Ph/50 Hz

Weight from 24 to 26 kg (without rope) depending on options. Rope Ø 6.5 mm

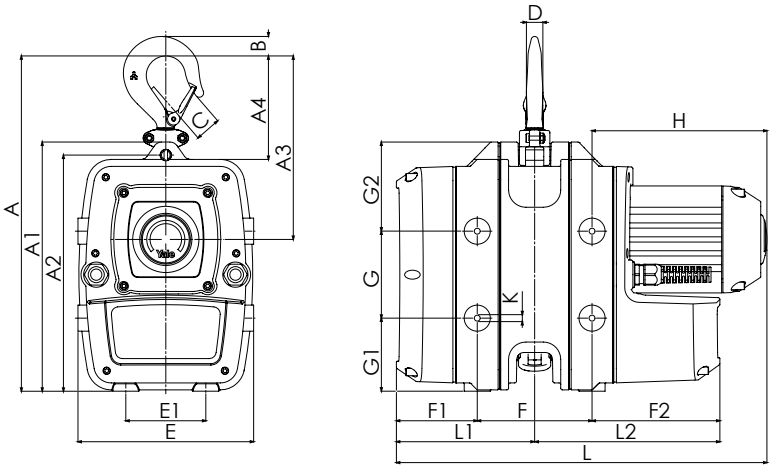

Dimensions	
A, mm	385
A1, mm	287
A2, mm	272
A3, mm	221
A4, mm	119
B, mm	22
C, mm	29
D, mm	19
E, mm	202
E1, mm	92
F, mm	132
F1, mm	93
F2, mm	147
G, mm	100
G1, mm	84
G2, mm	103
H, mm	201
K, mm	M8
L, mm	426
L1, mm	159
L2, mm	213

INFO

Yale hoists and trolleys are not designed for passenger elevation applications and must not be used for this purpose.

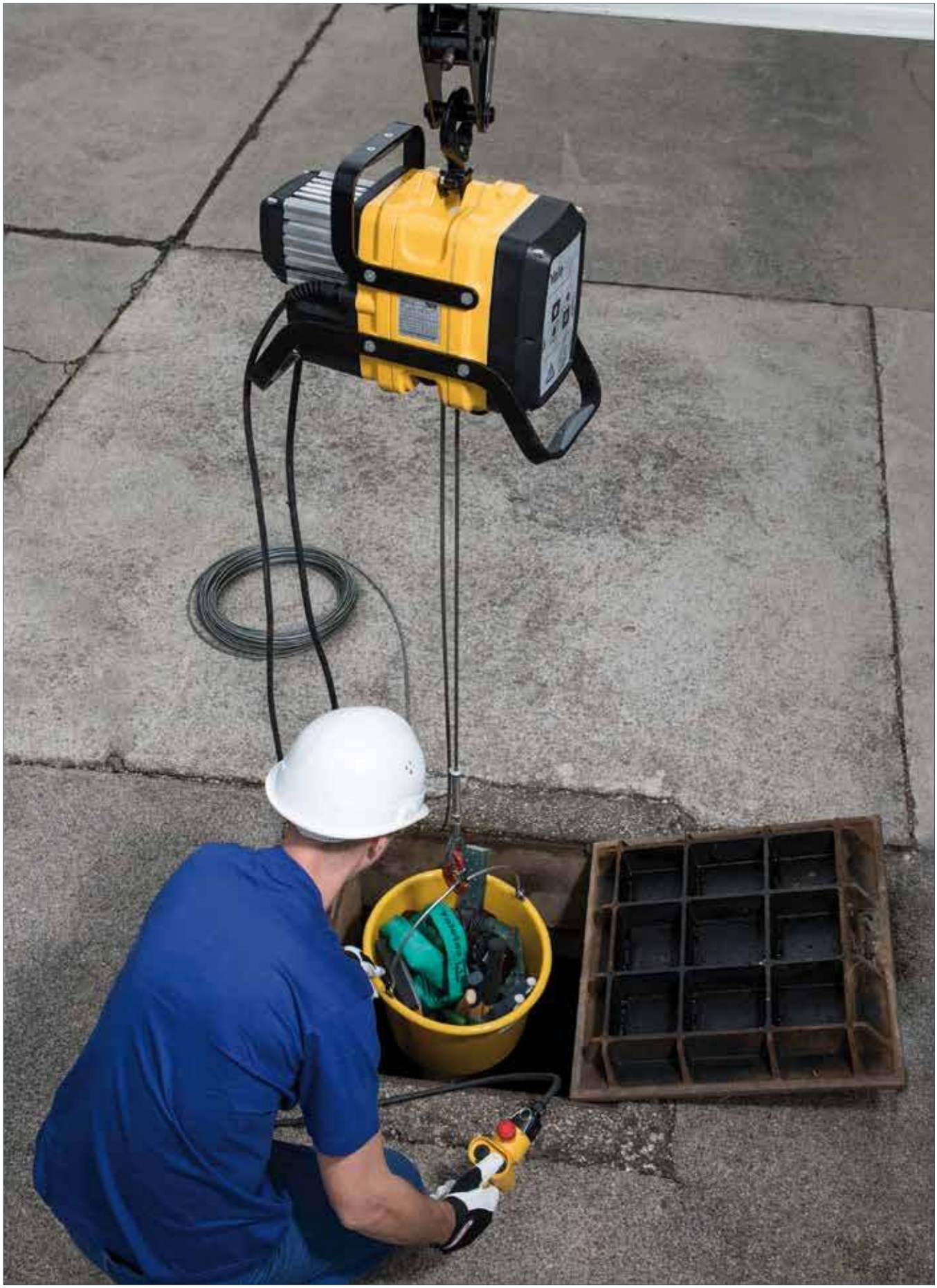

Functional principle of cranks

Safety crank (Siku) and ratchet crank (Raku)

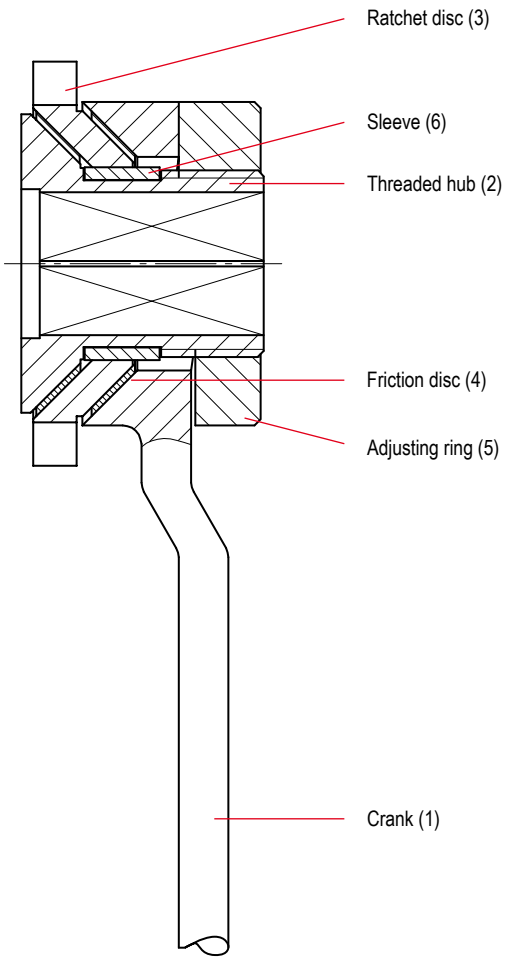

Lifting

By turning the crank (1) clockwise, all brake parts like friction discs (4), ratchet disc (3) and threaded hub (2) locked to a complete system. All components rotate in the same direction and the ratchet pawls (not shown here) engage alternately in the teeth on the ratchet disc. The load is hold securely in any position.

Lowering

If the crank will be rotate counterclockwise, the brake opens minimally. The ratchet disc is fixed by the ratchet pawls and does not rotate.

The load, which is either on the head or the claw, presses the housing down and causes the brake to close again. This process is repeated continuously when the load is released until the winch is unloaded.

With the safety crank (Siku), it is necessary to turn the crank through 360° when lifting and lowering.

The ratchet crank (Raku) works like a hand lever on a manual hoist. By switching the switch lever to lifting or lowering, this crank can be used like a ratchet. This is particularly useful in limited space. Furthermore, this type of crank can also be operated through 360°, as the same braking system as the Siku.

Crank overview (note: please pay attention to the corresponding capacity)

Model	Siku	Raku	Sifeku	Siku (short)	Raku (short)	Siku (elbowed)	Crank with/without folding handle	Safety spring-lock with plug crank
SJ/RSJ		•						
STW-F	•	•						
STW-V	•	•						
STW-FvB				•	•			
ZWW-L							•	
ZWW	•		•					
HB-W						•		
KHB	•							
SCH-W	•		•					•

Siku
Safety crank, zinc-plated

- With one-sided braking effect
- The load is held safely at every height.
- With folding handle

Cranks for rack and pinion jacks
STW-F, STW-V, ZWW, KHB and SCH-W

Model	Art-No.	Capacity kg	Length of crank mm	Square drive mm
Siku 15, zinc-plated.	40006026	1500	250	14
Siku 30, zinc-plated	40006026	3000	250	14
Siku 50, zinc-plated	40006026	5000	250	14
Siku 100, zinc-plated	40006171	10000	300	17
Siku 15, painted	40005461	1500	250	17
Siku 30, painted	40005461	3000	250	17
Siku 50, painted	40005461	5000	250	17

Cranks for steel jacks
STW-FvB

Model	Art-No.	Capacity kg	Length of crank mm	Square drive mm
Siku 15, painted	N00190073	1500	200	14
Raku 15, painted	192034961	1500	200	14

Crank for lifting jack
HB-W

Model	Art-No.	Capacity kg	Length of crank mm	Square drive mm
Siku 15, zinc-plated	N00190074	1500	250	14

INFO

For ordering the crank of the models
STW-F, STW-V, STW-FvB, KHB and SCH-W
it takes note to specify the manufacture year, capacity and the dimension of the square!

Siku & Raku
Safety ratchet crank

- Lifting or lowering movement adjustable by turning a lever.
- The load is held safely at every height.
- With folding handle

Cranks for steel jacks
SJ and RSJ

Model	Art-No.	Capacity kg	Length of crank mm	Square drive mm
Siku 15, painted	N00190008	1500	230	12
Siku 30, painted	N00190022	3000	250	14
Siku 50, painted	N00190053	5000	275	14
Siku 100, painted	N00190044	10000	300	17
Raku 15, painted	192037671	1500	230	12
Raku 30, painted	192037672	3000	250	14
Raku 50, painted	192037672	5000	250	14
Raku 100, painted	192037673	10000	300	17

Cranks for steel jacks
STW-F and STW-V

Model	Art-No.	Capacity kg	Length of crank mm	Square drive mm
Raku 15, verzinkt	40010237	1500	250	14
Raku 30, verzinkt	40010237	3000	250	14
Raku 50, verzinkt	40010237	5000	250	14
Raku 100, verzinkt	40008213	10000	300	17
Raku 15, painted	40004840	1500	250	17
Raku 30, painted	40004840	3000	250	17
Raku 50, painted	40004840	5000	250	17

Rachet pawl kit
for Siku and Raku

P13 for 1.5 t, 3.0 t and 5.0 t

Art.-No. 40003808

P14 for 10.0 t

Art.-No. N040004648

Safety spring crank (Sifeku) or safety spring lock with crank handle

Lifting and lowering

To generate the pre-tension, the spring (3) is manufactured with an oversize in relation to the brake ring (4) and installed.

The pre-tensioning torque which is generated corresponds at the same time to the no-load torque.

Turning the crank (1) clockwise the load will be lifted or supported.
Thereby the spring preload between spring (3) and brake ring (4) is increased.
In this case, the load is hold in any position up to the maximum braking torque and pressed against the brake ring.

The lowering process works in the same way, except that the crank (1) is turned anticlockwise.

Crank pinion

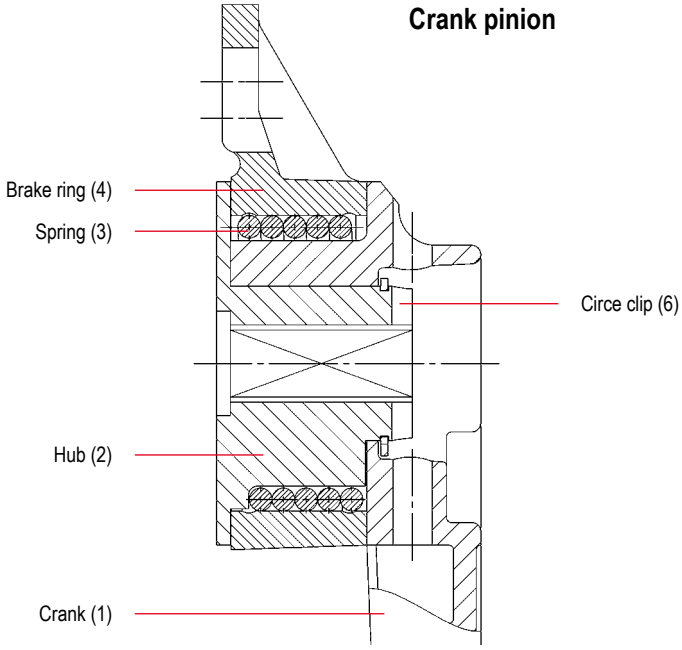

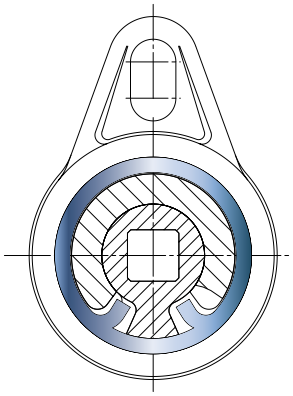

Brake new

the spring has sufficient movement in both directions

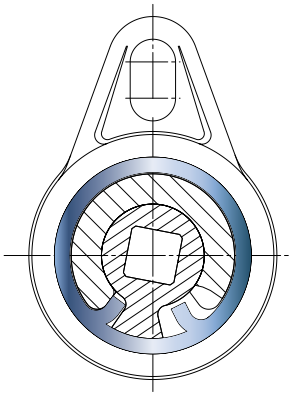

Brake, with braking torque

applied during lifting

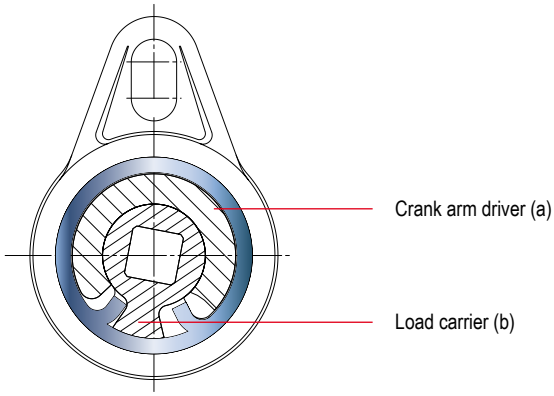

Brake during lowering

Spring (3) is released by the crank arm driver (a) and closed again by the load carrier (b)

Sifeku
Spring loaded safety crank

- Without pawls
- Silent
- Recoil proof
- Maintenance-free
- Enclosed housing
- Weather and temperature resistant
- Braking effect at both ends
- The load is held safely at every height, in the pushing and pulling direction.
- Approved by the TÜV as an independent crank
- With folding handle

Cranks for rack and pinion jacks STW-F, STW-V, ZWW, KHB and SCH-W

Model	Art-No.	Capacity kg	Length of crank mm	Square drive mm
Sifeku 15, painted	40004581	1500	250	14
Sifeku 30, painted	40004581	3000	250	14
Sifeku 50, painted	40004581	5000	250	14
Sifeku 15, painted	40003433	1500	250	17
Sifeku 30, painted	40003433	3000	250	17
Sifeku 50, painted	40003433	5000	250	17

Sifespe
Safety spring-lock with plug crank

- Plug crank removable
- No ratchet pawls in use
- Silent
- Maintenance-free
- Closed housing
- Weather and temperature resistant
- Braking effect at both ends
- The load is held safely at every height
- Handle not folding

Safety spring-lock with plug crank for rack and pinion jacks ZWW, GmZ and SCH-W

Model	Art-No.	Capacity kg	Length of crank mm	Square drive mm
Sifespe, painted	40051858	1500 - 5000	250	14/17
Plug crank Alu	39102698	1500 - 5000	250	17

Worm gear (ZWW-L)

The self-locking worm gear ensures that the load is held securely in any position.

Cranks for rack and pinion jacks ZWW-L

Model	Art-No.	Capacity kg	Length of crank mm	Square drive mm
Standard crank	N00190083	300	200	12
Standard crank	N00190082	600	250	12
Standard crank	N00190083	1200	200	12

Cranks with folding handle for rack and pinion jacks ZWW-L (only optional)

Model	Art-No.	Capacity kg	Length of crank mm	Square drive mm
with folding handle	N00190063	300	200	12
with folding handle	N00190064	600	250	12
with folding handle	N00190063	1200	200	12

Optional:
Crank with folding handle for rack and pinion jacks ZWW-L

SJ
Steel jack acc. to DIN 7355

Capacity 1500 - 10000 kg

Mechanical steel jacks can basically be used to lift almost all kinds of loads in maintenance and repair, ship building, construction as well as agriculture.

Steel winches are used for supporting, placing lifted loads underneath and for assembly work.
The Raku as a standard crank enables working in limited spaces, as it can be used like a ratchet in the direction of lifting and lowering. Alternatively, you can work with the crank 360°.

The field of application includes maintenance and repair, shipbuilding, the construction sector and agriculture.

Features

- The precisely machined gear box with optimal gear ratio ensures a minimum of effort and smooth operation.
- The load is supported either on the claw or the head of the steel jack.
- By turning the operating lever the jack moves smoothly and conveniently up and down along the rack.
- The load is held securely in any position. Inside the load brake the axial brake pressure is generated by the load itself, thus, it is proportional to the size of the load.
- No reduction of capacity on the claw.

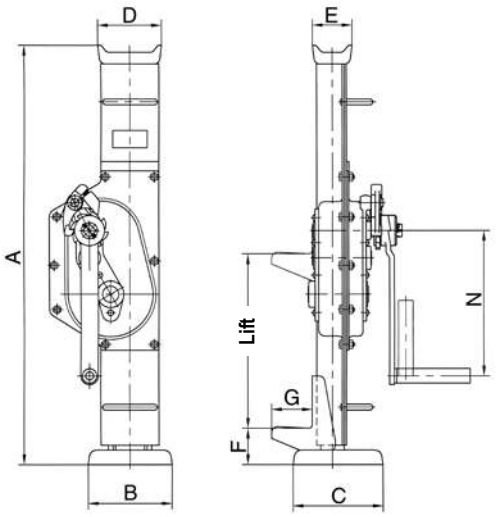

Technical data SJ Raku

Model	Art.-No. Raku	Capacity kg	Height A mm	Lift [1] mm	Hand effort at WLL daN	Weight kg
SJ 15	N01900005	1500	725	360	28	17
SJ 30	N01900002	3000	735	360	28	20
SJ 50	N01900003	5000	730	350	28	27
SJ 100	N01900006	10000	800	410	56	43

[1] Height of lift = Height + Lift

Dimensions SJ

Model	SJ 15	SJ 30	SJ 50	SJ 100
A, mm	725	735	730	800
B, mm	164	200	190	252
C mm	140	140	170	170
D, mm	76	83	108	124
E, mm	38	38	52	65
F, mm	70	70	80	85
G, mm	60	65	71	86
N, mm	225	249	275	300

STW-F
Steel jacks acc. to DIN 7355
with fixed lifting claw

Capacity 1500 - 10000 kg

Steel jacks are traditional hoisting equipment for universal application in the forest and agricultural sector, in the industrial sector for assembly activities and many other fields of application.

Features

- The robust steel design and a toothed rack of solid material increase the service life of the jack.
- Low wear owing to hardened gearing parts and precisely machined teething.
- The precisely machined gears with a high degree of efficiency guarantees low crank forces.
- The load is supported either on the claw or the head of the steel jack.
- Robust base plate for a high level of stability.
- No reduction of capacity on the claw.

STW-F
with fixed lifting claw and Sifeku

Technical data STW-F Siku

Model	Art.-No. **Siku**	Capacity kg	Height A mm	Lift[1] mm	Hand effort at WLL daN	Weight kg
STW-F 15	40021975	1500	720	350	28	12
STW-F 30	40021984	3000	720	350	28	21
STW-F 50	40051705	5000	720	300	28	26
STW-F 100	40051707	10000	792	300	40	42

[1] Height of lift = Height + Lift

Technical data STW-F Raku

Model	Art.-No. **Raku**	Capacity kg	Height A mm	Lift[1] mm	Hand effort at WLL daN	Weight kg
STW-F 15	40022008	1500	720	350	28	12
STW-F 30	40022013	3000	720	350	28	21
STW-F 50	40022019	5000	720	300	28	26
STW-F 100	40051708	10000	792	300	28	42

[1] Height of lift = Height + Lift

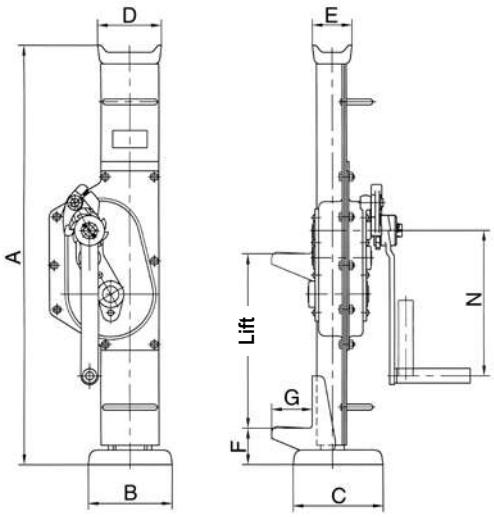

Dimensions STW-F

Model	STW-F 15	STW-F 30	STW-F 50	STW-F 100
A, mm	720	720	720	792
B, mm	130	130	145	145
C, mm	140	140	155	155
D, mm	90	90	110	125
E, mm	50	50	68	80
F, mm	60	61	62	85
G, mm	60	65	70	85
N, mm	250	250	250	300

INFO

STW-F Sifeku on request.

STW-V
1.5 t/3.0 t/5.0 t

STW-V 10.0 t

STW-V
Steel jacks acc. to DIN 7355 with adjustable lifting claw

Capacity 1500 - 10000 kg

The design of the steel jack allows for loads to be picked up and lowered from different heights over the entire length of the steel jack.
The adjustable claw is simply set to the appropriate application height in the load bar for this purpose.

Features

- The claw can be moved to any position on the adjusting rail.
- The load is supported either on the claw or the head of the steel jack.
- Robust base plate for a high level of stability.
- No reduction of capacity on the claw.

Technical data STW-V Siku

Model	Art.-No. Siku	Capacity kg	Height A mm	Lift[1] mm	Hand effort at WLL daN	Weight kg
STW-V 15	N01905000	1500	725	350	28	17
STW-V 30	N01905001	3000	725	350	28	23
STW-V 50	N01905002	5000	725	300	28	29
STW-V 100	N01905003	10000	792	300	40	46

[1] Height of lift = Height + Lift

Technical data STW-V Raku

Model	Art.-No. Raku	Capacity kg	Height A mm	Lift[1] mm	Hand effort at WLL daN	Weight kg
STW-V 15	N01905004	1500	725	350	28	17
STW-V 30	N01905005	3000	725	350	28	23
STW-V 50	N01905006	5000	725	300	28	29
STW-V 100	N01905007	10000	792	300	40	46

[1] Height of lift = Height + Lift

INFO

STW-V Sifeku on request.

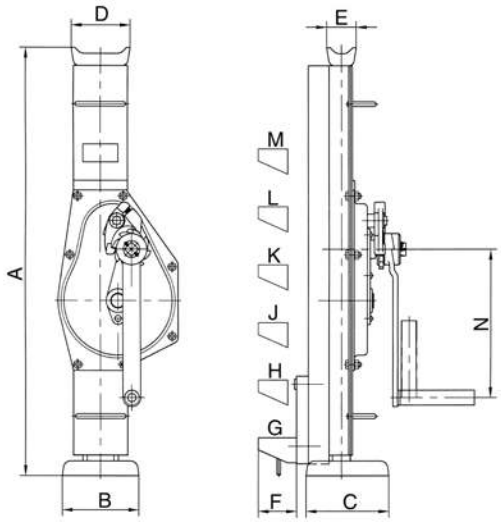

Dimensions STW-V

Model	STW-V 15	STW-V 30	STW-V 50	STW-V 100
A, mm	725	725	725	800
B, mm	130	130	140	140
C, mm	140	140	160	160
D, mm	90	100	110	140
E, mm	50	50	68	76
F, mm	70	70	70	70
G, mm	80	80	80	85
H, mm	Claw freely adjustable on load bar (55 mm steps)			191
J, mm				297
K, mm				403
L, mm				509
M, mm				615
N, mm	250	250	250	300

STW-FvB
Steel jacks acc. to DIN 7355 with fixed lifting claw shortened design

Capacity 1500 kg

Wherever low headroom dimensions are required, the steel jack of shortened design is used.

Features

- The robust steel design and a toothed rack of solid material increase the service life of the jack.
- Low wear owing to hardened gearing parts and precisely machined teething.
- The precisely machined gears with a high degree of efficiency guarantees low crank forces.
- The load is supported either on the claw or the head of the steel jack.
- Robust base plate for a high level of stability.
- No reduction of capacity on the claw.

Technical data STW-FvB Siku

Model	Art.-No. **Siku**	Capacity kg	Height A mm	Lift[1] mm	Hand effort at WLL daN	Weight kg
STW-FvB 15	30014000	1500	600	300	28	11

[1] Height of lift = Height + Lift

Technical data STW-FvB Raku

Model	Art.-No. **Raku**	Capacity kg	Height A mm	Lift[1] mm	Hand effort at WLL daN	Weight kg
STW-FvB 15	30014002	1500	600	300	28	11

[1] Height of lift = Height + Lift

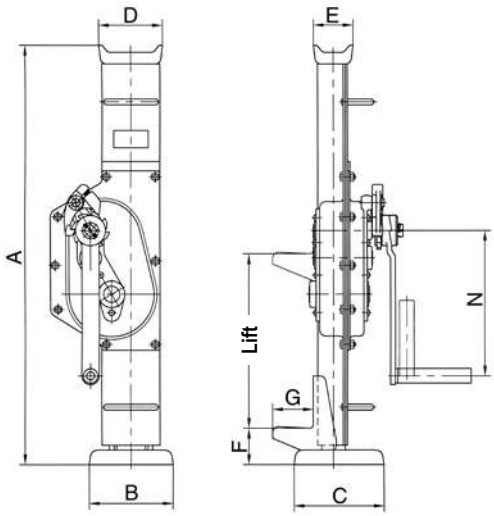

Dimensions STW-FvB

Model	STW-FvB 15
A, mm	600
B, mm	130
C, mm	140
D, mm	90
E, mm	50
F, mm	60
G, mm	60
N, mm	200

INFO

STW-FvB Sifeku on request.

RSJ
Rail jacks acc. to DIN 7355

Capacity 5000 kg

Track rails can be quickly and safely lifted by means of this jack, also under unfavourable conditions.
The shoe-type foot with a wider support surface makes it possible to apply the jack between the sleepers and the tracks.

Features

- The precisely machined gear box with optimal gear ratio ensures a minimum of effort and smooth operation.
- The load is supported either on the claw or the head of the steel jack.
- By turning the operating lever the jack moves smoothly and conveniently up and down along the rack.
- The load is held securely in any position. Inside the load brake the axial brake pressure is generated by the load itself, thus, it is proportional to the size of the load.
- No reduction of capacity on the claw.

INFO

On page 200 you will find also rail grab.

Technical data RSJ Raku

Model	Art.-No. **Raku**	Capacity kg	Height A mm	Lift [1] mm	Hand effort at WLL daN	Weight kg
RSJ 50	N01900008	5000	740	360	28	29

[1] Height of lift = Height + Lift

Dimensions RSJ

Model	**RSJ 50**
A, mm	740
B, mm	200
C mm	250
D, mm	108
E, mm	52
F, mm	90
G, mm	71
N, mm	275

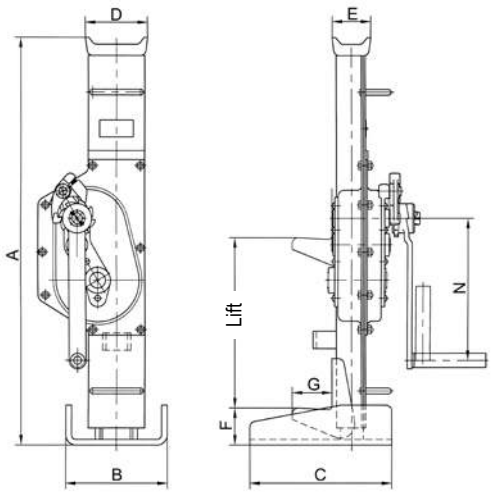

Yaletaurus
Ratchet jack

Capacity 10000 kg

Mechanical ratchet jacks with lifting claw are designed for operation in confined areas where space below the load is restricted, thus preventing the use of traditional lifting equipment. The Yaletaurus is the ideal unit for lifting, positioning or transportation of machines resp. heavy objects as well as for repair and assembly jobs in cramped areas and under toughest conditions.
In spite of its capacity of 10000 kg the Yaletaurus has a weight of just 30 kg and the integrated carrying handle makes it a portable, versatile tool.
With a hand force of 45 kg on the detachable hand lever, the Yaletaurus will lift, press, push or lower a load of 10000 kg in any direction. A standard crank wheel will bring the jack quickly to the required position.

Features

- Automatic screw-and-disc type load brake.
  The axial brake pressure is generated by the load itself and is, therefore, proportional to the size of the load. The load is held secure in any position.
- Single part housing made from spheroidal cast iron with integrated lifting claw.
- The screw-and-disc type load brake originates from the Yale PUL-LIFT® (spare parts are easily available).
- Low lever pull and long life endurance due to optimum gearing and high quality materials.

Technical data Yaletaurus

Model	Art.-No.	Capacity on the head kg	Capacity on the claw kg	Height A mm	Lift [1] mm	Hand effort at WLL daN	Weight kg
Yaletaurus	N0130003	10000	7000	505	295	45	30

[1] Height of lift = Height + Lift

Dimensions Yaletaurus

Model	Yaletaurus
A, mm	505
B, mm	170
C mm	125
D, mm	95
E, mm	65
F, mm	75
G, mm	75
H, mm	238
J, mm	217
N, mm	647

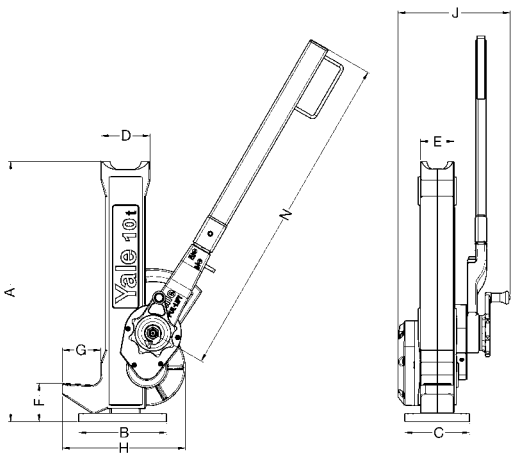

ZWW-L
capacity 300 kg and 600 kg

ZWW-L
capacity 1200 kg

ZWW
capacity 1500 kg

ZWW
capacity 10000 kg

ZWW-L and ZWW Rack & pinion jacks

Capacity 300 - 10000 kg

Wall-mounted rack and pinion jacks are used for lifting, lowering, pulling and pushing of loads.

Features

- Robust steel design with precisely machined worm and spur gears for smooth and easy manual operation.
- Solid steel rack with additional bore hole for fastening of the load.
- Low wear owing to hardened gearing parts and precisely machined teething.
- Up to 1200 kg lifting load for pushing or pulling loads are equal.
- At standard tensile load from 1500 - 10000 kg. Compressive load possible on request.
- Rigid wall mounting.

Optional

- Improved corrosion protection owing to zinc-plating or special coating of rack (from capacity 1500 kg).
- Different rack length on request.
- Symmetrical toothing for model ZWW on request.
- Crank with folding handle for ZWW-L.

INFO

ZWW-L with capacities of 600 and 1000 kg are also available in explosion-proof design.

We are pleased to send you our new Atex catalogue in PDF format.

Technical data ZWW-L

Model	Art.-No.	Tensile or pressure load kg	Rack length mm	Lift mm	Lift per crank rotation mm	Hand effort at WLL daN	Weight kg
ZWW-L 300/400	NO1905011	300	600	400	11	10	5.4
ZWW-L 600/400	NO1905012	600	600	400	11	15	6.0
ZWW-L 300/600	NO1905013	300	800	600	11	10	5.9
ZWW-L 600/600	NO1905014	600	800	600	11	15	6.5
ZWW-L 1200/600	NO1905015	1200	800	600	3.6	14	9.5
ZWW-L 300/800	NO1905016	300	1000	800	11	10	6.4
ZWW-L 600/800	NO1905017	600	1000	800	11	15	7.0
ZWW-L 1200/800	NO1905018	1200	1000	800	3.6	14	10.6
ZWW-L 600/1000	NO1905020	600	1200	1000	11	15	7.5
ZWW-L 1200/1000	NO1905021	1200	1200	1000	3.6	14	11.7
ZWW-L 600/1200	NO1905023	600	1400	1200	11	10	6.0

Technical data ZWW with Sifeku

Model	Art.-No. **Sifeku**	Tensile load kg	Rack length mm	Lift mm	Lift per crank rotation mm	Hand effort at WLL daN	Weight kg
ZWW 1500/800	40055131	1500	1090	800	14	28	11
ZWW 3000/565	40056138	3000	975	565	9	28	19
ZWW 5000/700	40057134	5000	1170	700	4.5	28	28

Technical data ZWW with Siku

Model	Art.-No. **Siku**	Tensile load kg	Rack length mm	Lift mm	Lift per crank rotation mm	Hand effort at WLL daN	Weight kg
ZWW 10000/700	40058009	10000	1240	700	3.2	40	55

Dimensions ZWW und ZWW-L

Model	ZWW-L 300	ZWW-L 600	ZWW-L 1200	ZWW 1500	ZWW 3000	ZWW 5000	ZWW 10000
A, mm	20	20	25	35	45	50	60
B, mm	20	25	35	25	30	40	50
C, mm	–	–	–	215	280	330	380
Ø D, mm	11	13	16,5	21	21	21	30
E, mm	16	20	20	20	25	25	30
F, mm	130	130	127	135	165	140	160
G, mm	119	119	98	151	212	219	269
H, mm	200	200	180	310	395	400	480
I, mm	–	–	35	168	179	197	200
J, mm	38	35	30	26	31	37	40
K, mm	–	–	–	100	120	120	140
L, mm	60	60	140	130	160	160	180
M, mm	170	170	140	260	305	320	410
Ø N, mm	11	11	13	13	15	17	21
O, mm	–	–	100	110	120	105	125
P, mm	–	–	–	40	50	50	60
Q, mm	10	10	–	8	10	10	10
R, mm	200	250	200	250	250	250	300
S, mm	110	110	110	130	130	130	250
T, mm	–	–	–	42	86	109	150
U, mm	–	–	–	43	53	70	88
X, mm	–	–	–	20	25	45	30
Ø Z, mm	–	–	–	–	–	–	–

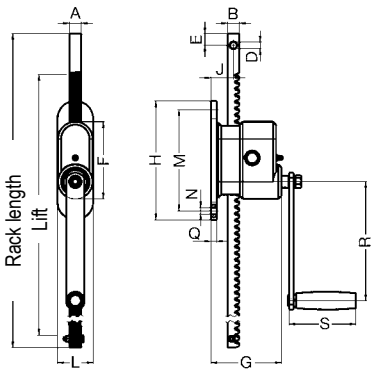

ZWW-L, capacity 300 - 600 kg

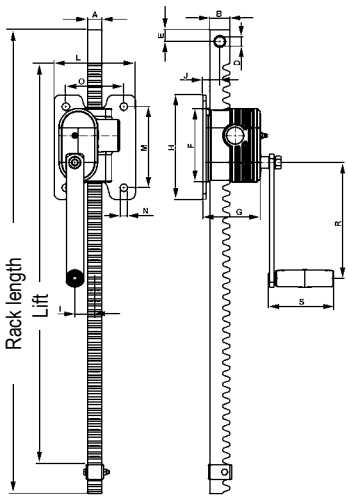

ZWW-L, capacity 1200 kg

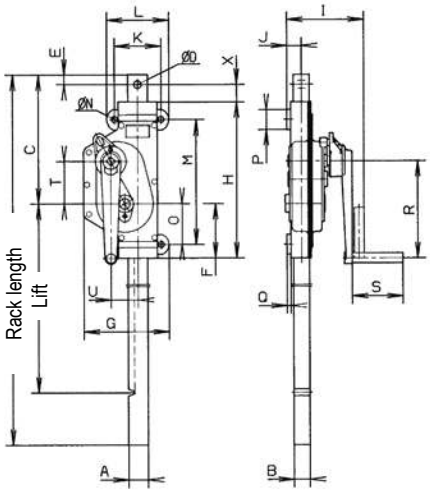

ZWW, capacity 1500 - 10000 kg

On systems with several racks in line at 90° to the crank axis

- Self-locking action **only gear unit with crank**
- Crank force = 15 kg, at a **maximum** total load of 1000 kg
- Connection to 1" Rohr (DIN 2440) on building side
- This combination is also possible for ZWW-L 300 and ZWW-L 600.

ZWW-L combinations

Capacity 1200 kg

Where it is important to lift as evenly as possible (levelling), wall-mounted rack and pinion wall jacks can also be coupled, whereby the direction - depending on the model - is irrelevant.

The wall mounted rack and pinion jacks can be combine about 3/4" and/or 1" pipes (DIN 2440). When connecting pipes over a length of 2 m, we recommend the pipes to stabilize so that it does not droop in the middle.

We like to advise you in this case.

On systems with several racks in line to the crank axis

- Self-locking action in **every gear unit**
- Crank force = 15 kg with a total load of 1000 kg
- Connection to 3/4" tube (DIN 2440) on building side

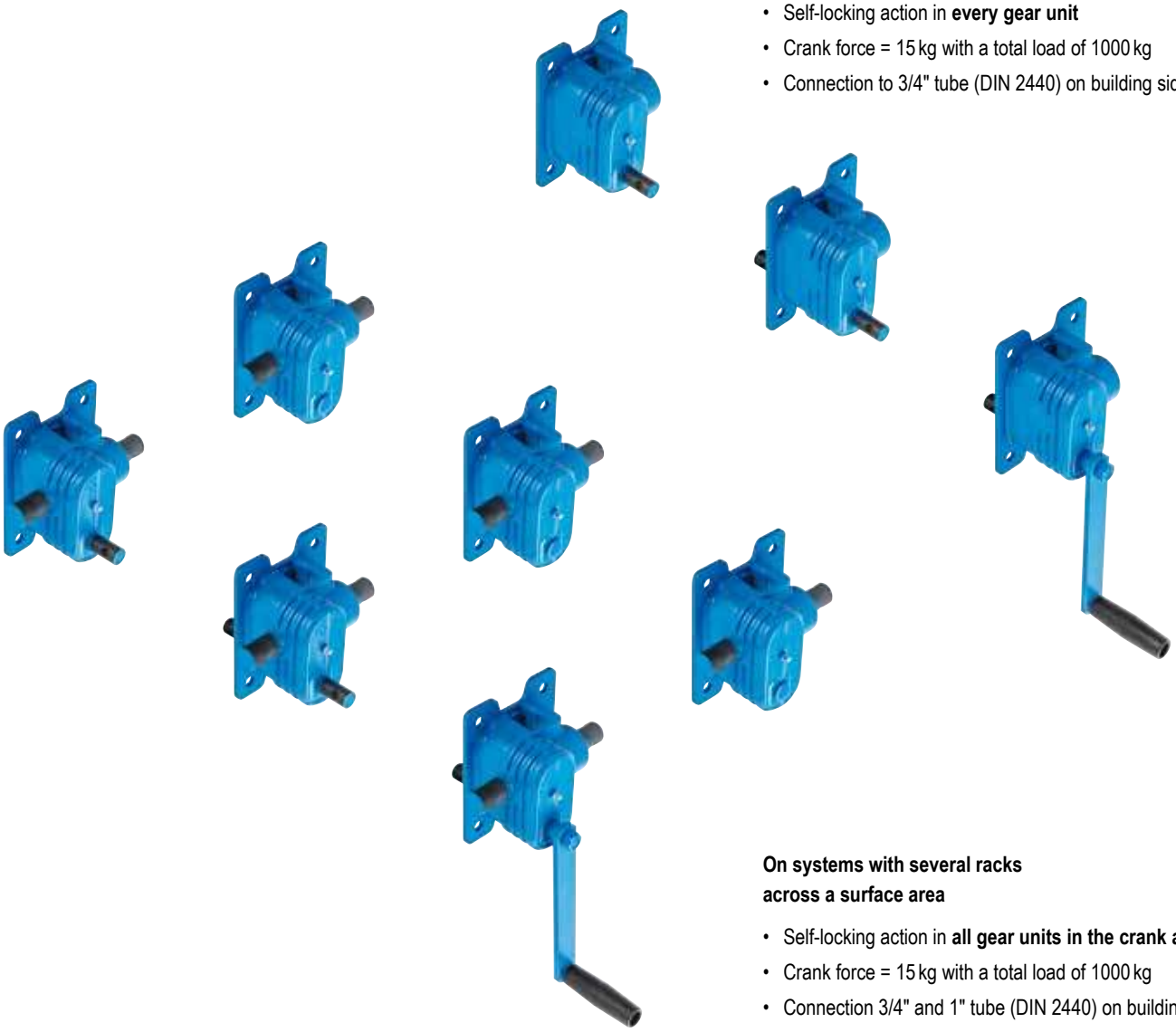

On systems with several racks across a surface area

- Self-locking action in **all gear units in the crank axis**
- Crank force = 15 kg with a total load of 1000 kg
- Connection 3/4" and 1" tube (DIN 2440) on building side

25
25

Crank
in special design
on request
Art.-No. N00190074

HB-W
Lifting jack

Capacity 1500 kg

The stable lifting jack with integrated 1.5 t steel jack for supporting tube and bar material.

Features

- Load will be fixed in each position safely by a load brake system.
- Large base plate for a high level of stability.
- Wheels for easy transport.

Optional

- The attachable support roller facilitates the sliding of heavy loads.

Technical data HB-W

Model	Art.-No. Siku	Capacity kg	Height mm	Lift [1] mm	Hand effort at WLL daN	Lift per crank rotation mm	Weight kg
HB-W 1500	N01900014	1500	650	350	28	15	40

[1] Height of lift = Height + Lift

Technical data supporting roller HB-A

Model	Art.-No.	Capacity kg	Height with supporting roller mm	Weight kg
Supporting roller	30060011	1500	705	5

Dimensions HB-W

Model	HB-W 1500
A, mm	300
B, mm	500
C_{ein}, mm	650
D_{aus}, mm	1000
E, mm	100
F, mm	320
G, mm	300
H, mm	385

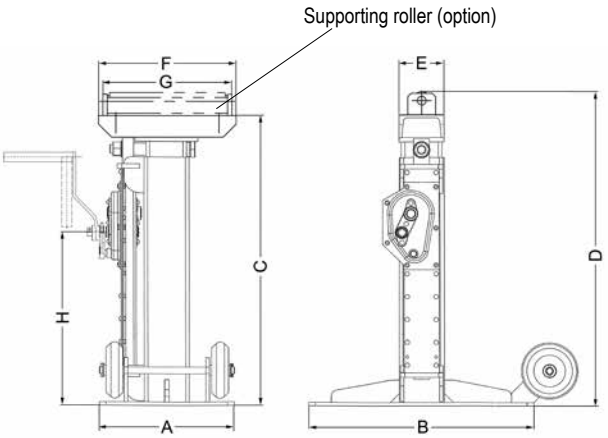

KHB
Truck body lifting jack

Capacity 5000 and 8000 kg

Truck body lifting jacks are used for supporting vehicle bridges, swap bodies and trailers; they are also used in vehicle construction and freight forwarding applications.

Features

- High-quality, torsionally stiff steel design with large base plate for a high level of stability.
- Hardened gearing parts and precisely machined teeth-ing for improved handling and low wear.
- The load can either be supported on the head or on the adjustable claw.

KHB 5
capacity 5000 kg

KHB 8
capacity 8000 kg

Technical data KHB Siku

Model	Art.-No. Siku	Capacity kg	Height mm	Lift[1] mm	Hand effort at WLL daN	Dim. B mm	Dim. C mm	Dim. D mm	Dim. E mm	Dim. F mm	Dim. O/P mm	Weight kg
KHB 5000/500	30077011	5000	1100	500	18	540	500	80	140	250	70/70	80
KHB 8000/500	30080012	8000	1100	500	26	540	500	100	170	300	150/180	111

[1] Height of lift = Height + Lift

Step height of adjustable lifting claw

Model	KHB 5000	KHB 8000
1. step, mm	175	290
2. step, mm	230	396
3. step, mm	285	502
4. step, mm	340	608
5. step, mm	395	714
6. step, mm	450	820
7. step, mm	505	926
8. step, mm	560	1032
9. step, mm	615	–
10. step, mm	670	–
11. step, mm	725	–
12. step, mm	780	–
13. step, mm	835	–
14. step, mm	890	–

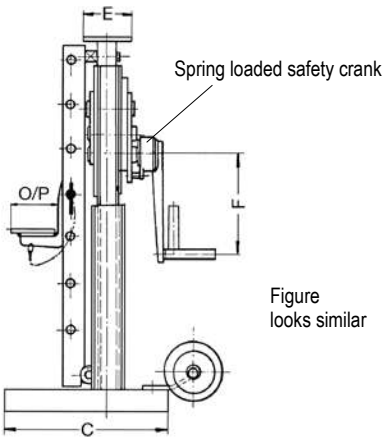

Figure
looks similar

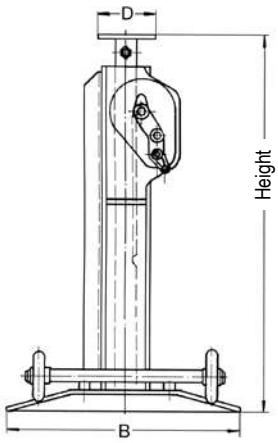

Model S 20

Model S 24

S 20 and S 24
Worm gear drive unit

The worm gear drives are suitable for a large variety of applications in construction for moving or turning loads, as gears for rope drums or chain sprockets or slewing drives.

Features

- Enclosed housing for the protection of parts inside.
- Enclosed and precisely machined gear for little effort and a long service life.

Technical data S 20 and S 24

Model	Art.-No.	Ratio	Drive torque daNm	Required crank effort daN	Shaft length mm	Shaft diameter mm
S 20	32626004	20:1	12	11	196	25
S 24	32626020	24:1	36	22	200	36

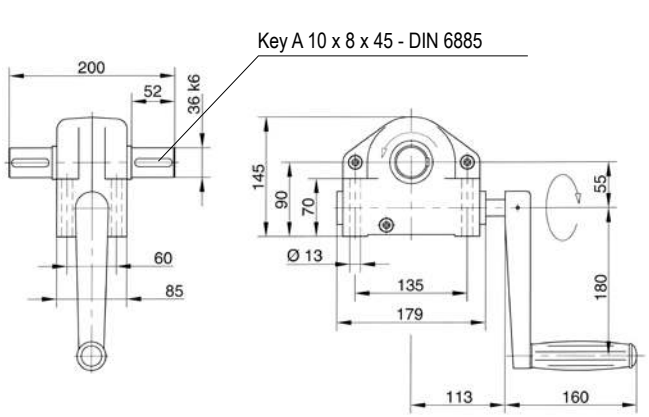

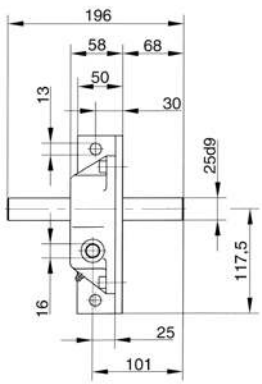

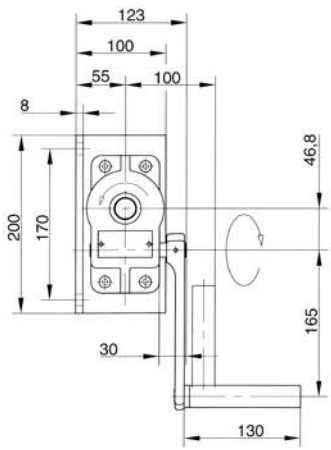

SCH-W
Sluise gate jack

Capacity 1500 - 10000 kg

The reliable sluice gate jack for opening and closing gates in sluices.

Features

- The spring loaded safety crank permanently holds the sluice gate closed with pressure.
- Hardened gearing parts and precisely machined teeth-ing for improved handling and low wear.

Technical data SCH-W Sifeku

Model	Art.-No. **Sifeku**	Tensile or pressure load[1] kg	Rack length mm	Lift mm	Hand effort at WLL daN	Weight kg
SCH-W 15	40051714	1500	1200	800	28	18
SCH-W 30	40051717	3000	1250	800	28	23
SCH-W 50	40051720	5000	1350	900	28	32

[1]The pressure force is reduced with a larger lift (loading case II to Euler)

Technical data SCH-W Siku

Model	Art.-No. **Siku**	Tensile or pressure load[1] kg	Rack length mm	Lift mm	Hand effort at WLL daN	Weight kg
SCH-W 100	40051722	10000	1550	1000	40	56

INFO

Please fill in the questionnaire on the next page for sluice gate jack systems.

Dimensions SCH-W

Model	SCH-W 15	SCHW-30	SCHW-50	SCH-W 100
A, mm	35	45	50	60
B, mm	25	30	40	50
C, mm	140	160	145	165
D, mm	85	60	45	65
E, mm	125	204	189	235
F, mm	78	92	100	112
G, mm	175	230	260	320
H, mm	310	395	400	480
I, mm	33.5	39.5	51	59
J, mm	43.3	53.1	69.5	88.3
K, mm	121	138	81	84
L, mm	230	230	230	290
M, mm	90	90	90	115
N, mm	153	158	173	183
O, mm	52.5	55	61	66
P, mm	52.5	55	64	70
Ø Q, mm	14	14	14	14
R, mm	7	7	7	8
S, mm	76.5	85.5	88	100
T, mm	100.5	108.5	120	140
U, mm	113	121	132	185
V, mm	86	94	105	–
W, mm	136	144	155	–
X, mm	130	130	130	250
Y, mm	250	250	250	300

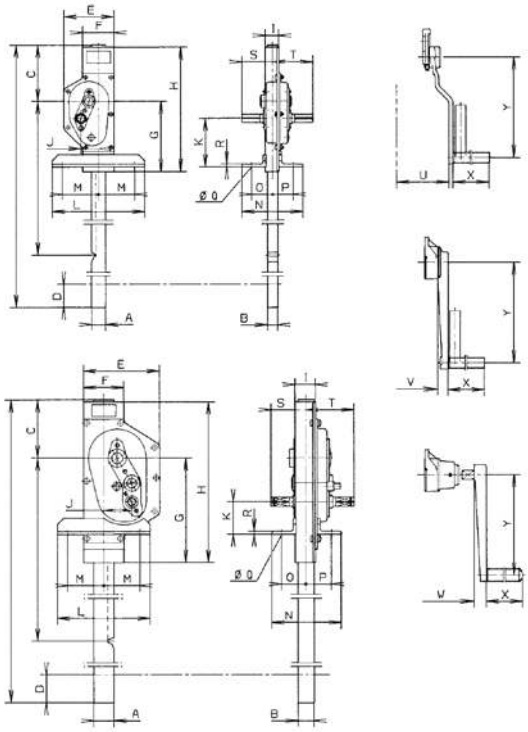

Technical questionnaire to identify a suitable sluice gate jack systems

Company: _____ Date: _____

Contact: _____ e-Mail: _____

Phone: _____ Fax: _____

☐ Manual drive

Manual operating force _____ kN

Sluice gate

Thickness _____ mm

Material

☐ Wood

☐ Steel

Weight _____ kg

Friction coefficient

☐ Steel/Wood

☐ Steel/Rubber

☐ Roller gate

☐ Motor drive with manual emergency drive

Lifting speed ☐ Standard

_____ m/min

Operating voltage _____ V

_____ Hz

☐ 230/400 V, 50 Hz three-phase current

Motor rating

Load cycles per hour _____

Lift per load cycle _____

Surrounding temperature _____

Remark

_____

Quantity

_____

Accessories

☐ Lifting motion limitation

☐ Electrical cut-out by safety clutch

☐ Auma rotary drive

Indicate local conditions and water levels

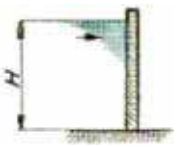

H = _____

☐ without water below

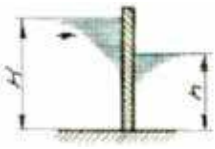

H = _____

h = _____

☐ with water below

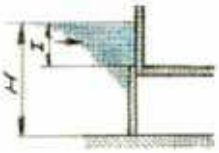

H = _____

l = _____

☐ completely in water above

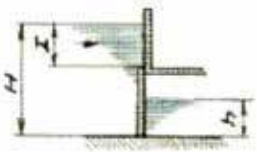

H = _____

l = _____

h = _____

☐ completely in water above, partly in water below

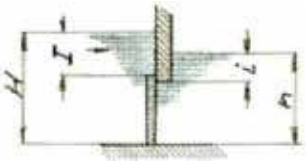

H = _____

l = _____

h = _____

i = _____

☐ completely in water above and in water below

Technical questionnaire to identify a suitable sluice gate jack systems

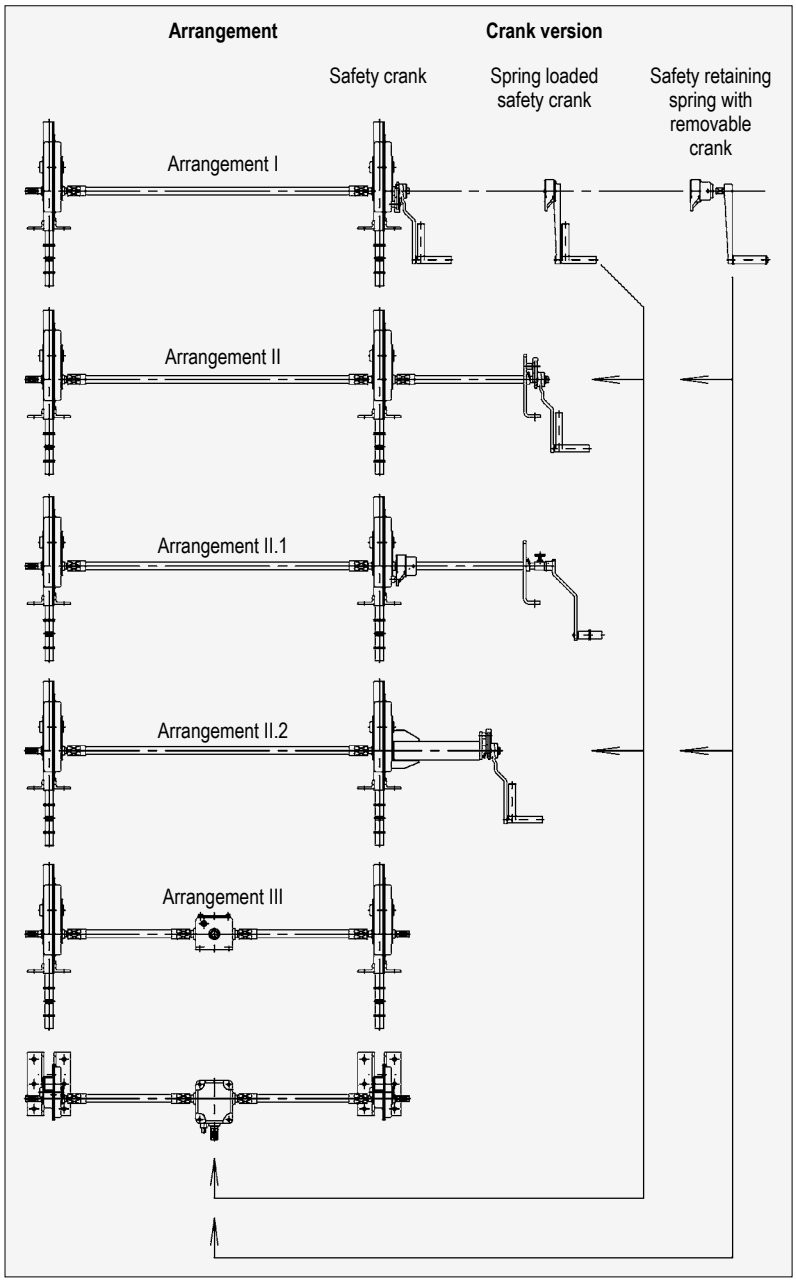

Arrangement

Crank version

(Retaining springs not possible for 10 t model)

Date

Name

Application

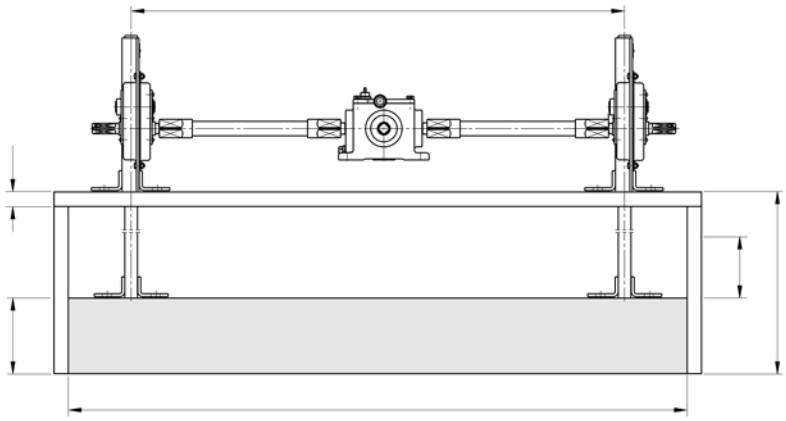

INFO

This user information presents a general review regarding the application of cranes and does not substitute the existing operating instructions for specific products!

Lifting and slewing operations may be carried out by competent users (trained in theory and practice) only. When operated correctly, our cranes will offer the highest degree of safety in line with long life expectancy and avoid damage to products and people.

Yalesystems cranes are manufactured in accordance with the machinery directive 2006/42/EC and the latest DIN 15018 H2 B2 (gantry cranes H2 B3) and correspond to the VDE regulations.

All components are mechanically shot blast, then primed and coated with RAL 1023 (yellow) paint, D.F.T. approx. 60 micron.

Modification of delivery condition

Design and finish of the cranes may not be modified by e.g. installation of outside supplied parts, bending, welding, grinding, removal of parts, added bores, removal of safety devices like locking mechanisms, locking pins, safety latches etc.

Limitations of operation

Temperature

Cranes may normally be operated at ambient temperatures between - 10 °C up to + 50 °C. These values are approximate and may deviate from the specific givings of the product concerned. The accurate data are given in the current operating instructions.

Chemicals

Cranes may not be operated without hesitation in the area of chemicals or chemical vapours – consult our specialists for advice. Cranes which have been subject to chemicals or vapours must be taken out of service and inspected by us.

Transport of people

Transport of people with cranes is generally forbidden!

Operation in danger zones

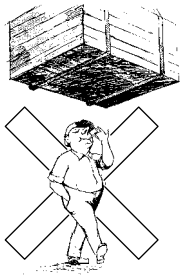

Lifting or transport of loads must be avoided while personnel are in the danger zone.
People are not allowed to pass over or under a suspended load.

Electrical hazards

Please consult the specific operating instructions for possible electrical hazards. Electrical connections may only be performed by authorized persons resp. companies!

Maintenance and repair

To ensure safe operation, all cranes must be subjected to regular inspections according to the maintenance instructions given by the manufacturer. For legal obligations refer to DGUV Vorschrift 52 (BGV D6).

Depending on the frequency and impact of applications, the crane has to be maintained, at least once per year or in case of obvious damages, by competent persons resp. inspectors.

Repairs and inspections may only be carried out by competent persons resp. inspectors who use original spare parts. Repairs and inspections must be recorded consecutively.

Inspections

The contractor has to make sure that powered cranes are inspected prior to initial operation and after significant modifications by a competent person. This is also applicable for hand operated cranes with a capacity of more than 1000 kg.

For cranes according to § 3a para. 3 DGUV Vorschrift 52 (BGV D6) the inspection before initial operation consists of advance survey, inspection of building and quality acceptance.

The inspection prior to initial operation is not required for cranes, which are delivered ready-to-use and with certificate of a type approval or EC declaration of conformity.

INFO

You will find the General Terms and Conditions at the end of the catalogue.

Please note the information on our training courses on page 4.

Technical questionnaire to identify the suitable crane system

Company: _____ Date: _____

Contact: _____ e-Mail: _____

Phone: _____ Fax: _____

☐ Wall-mounted jib crane
☐ Floor-mounted jib crane
☐ For outdoor use

Capacity		_____	kg
Slewing range		_____	
Boom length	A	_____	mm
Boom clearance	UK	_____	mm
or: ceiling clearance	H	_____	mm
or: overall height	B	_____	mm
or: highest hook position		_____	mm

Accessories

- ☐ Increased paint thickness
- ☐ Hot-dip galvanizing
- ☐ Boom locks
- ☐ Slewing range stoppers
- ☐ Electrically driven slewing gear
- ☐ Slewing brake

Power supply

- ☐ Round cable
- ☐ Festooned cable
- ☐ Suspended control

Mounting for wall-mounted jib crane

- ☐ Threaded rods/anchor bolts
- ☐ Pillar embracing

Mounting for floor-mounted jib crane

- ☐ Anchors and template
- ☐ Standard base plate (welded) incl. anchors/rawlplug
- ☐ Dowel base plate (bolted) incl. anchors/rawlplug

Hoist

- ☐ Manual hoist
- ☐ Electric chain hoist (single speed)
- ☐ Electric chain hoist (2 speeds)

☐ Gantry crane

Capacity		_____	kg
Gantry width – inside –	a	_____	mm
Gantry width – outside –	A	_____	mm
Beam clearance	UK	_____	mm
or: ceiling clearance	H	_____	mm
or: overall height	B	_____	mm
or: highest hook position		_____	mm

Accessories

- ☐ Increased paint thickness
- ☐ Hot-dip galvanizing

Power supply

- ☐ Round cable
- ☐ Festooned cable
- ☐ Suspended control

Trolley

- ☐ With push trolley
- ☐ With geared trolley
- ☐ With electric trolley (single speed)
- ☐ With electric trolley (2 speeds)

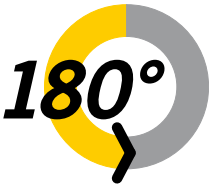

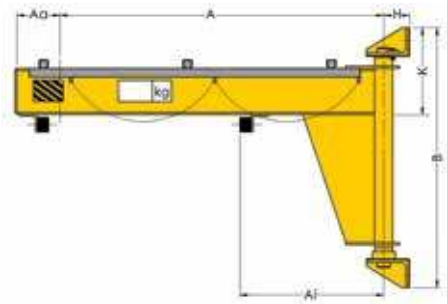

PMS
Wall-mounted jib crane

Elevated boom with optimal height, slewing range 180°

Lightweight, twist-free steel girder construction with low headroom. The boom is fitted with a bearing and a wall bracket for anchoring the crane to a concrete wall.

Mounting a jib crane to a wall, in combination with a festooned cable system, may lead to restrictions in the slewing range of the boom. This being the case, slew stoppers (buffers) should be fitted accordingly.

Mounting

- Wall mounting, using threaded rods that go through the wall and that are bolted to the wall with counter plates and nuts.
- Pillar embracing with anchor bolts and wall bracket. Bracket plate max. 500 mm, anchor bolts (threaded rods) max. 1000 mm.
- Alternative mounting systems on request.

Optional

- Slew stoppers (buffers) can be fitted on building site for a pre-determined fixed slewing range.
- Slewing brake, to control the boom speed during slewing. Recommended for a boom length of more than 5 m or a headroom of more than 4 m. This prevents uncontrolled movement of the boom.
- Increased paint layer (120 µm) or hot-dip galvanisation for outdoor use.
- Manual locking device, to hold the boom in a fixed position (wind protection).
- Hoist cover for outdoor use.

INFO

Mounting supports and walls are within the responsibility of the user.

Scope of delivery

- The electrical system is equipped with a lockable main switch, round cable power supply with cable support pipes for booms up to 4000 mm.
- From 4500 mm upwards, the boom is equipped with a festooned cable power supply. Due to cable sag on low cranes, we recommend the use of festooned cables even on short booms.
- Trolley stoppers at the front and at the back.
- Cranes are supplied with an operating manual and complete manufacturer‘s documentation.

Standard delivery programme PMS

Model	Capacity kg	Boom length in mm										
		2000	2500	3000	3500	4000	4500	5000	5500	6000	6500	7000
PMS 125	125	•	•	•	•	•	•	•	•	•	•	•
PMS 200	200	•	•	•	•	•	•	•	•	•	•	•
PMS 250	250	•	•	•	•	•	•	•	•	•	•	•
PMS 400	400	•	•	•	•	•	•	•	•	•	•	•
PMS 500	500	•	•	•	•	•	•	•	•	•	•	•
PMS 800	800	•	•	•	•	•	•	•	•	•	•	•
PMS 1000	1000	•	•	•	•	•	•	•	•	•	–	–
PMS 1600	1600	•	•	•	•	•	•	•	–	–	–	–
PMS 2000	2000	•	•	•	•	•	–	–	–	–	–	–
PMS 2500	2500	•	•	•	–	–	–	–	–	–	–	–

Mounting systems wall-mounted jib cranes

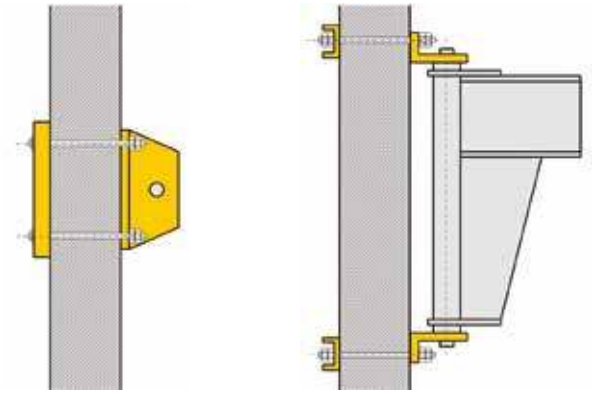

Wall mounting, using threaded rods going through the wall and being fixed to the wall with counter plates and nuts

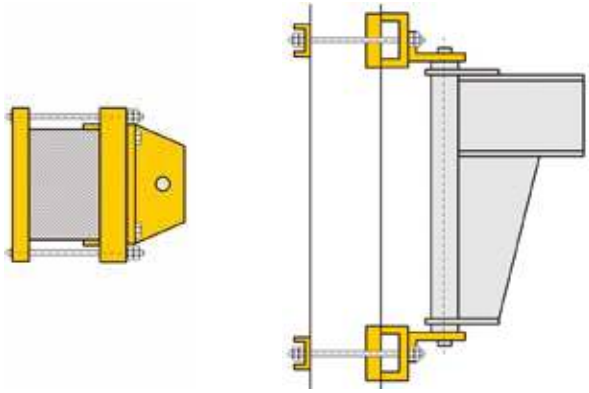

Pillar embracing with anchor bolts and wall bracket (bracket plate max. 500 mm, anchor bolts max. 1000 mm)

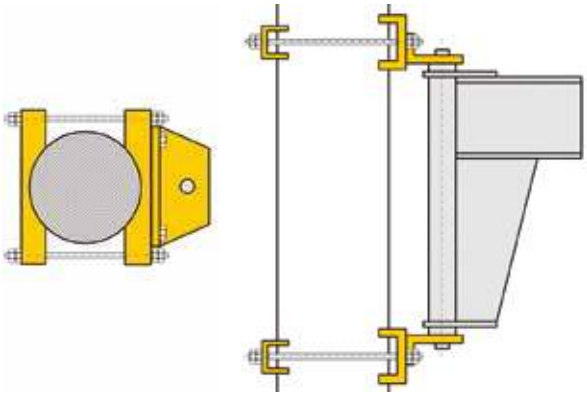

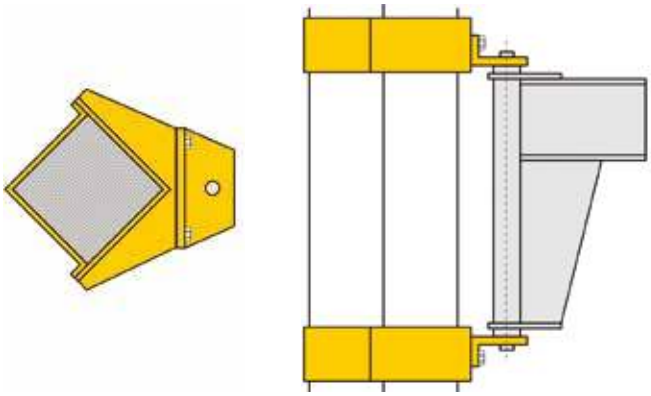

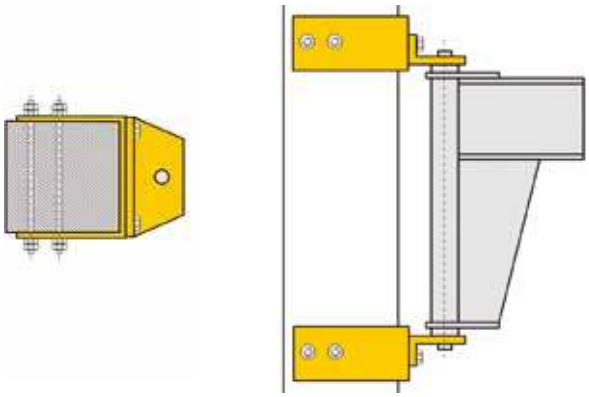

INFO

If wall-mounted jib cranes are mounted directly on the wall and festooned cable power supply is used, the slewing range may be limited depending on the size of the hoist.

Further fastening possibilities such as weld-on brackets, ceiling mounting etc. on request.

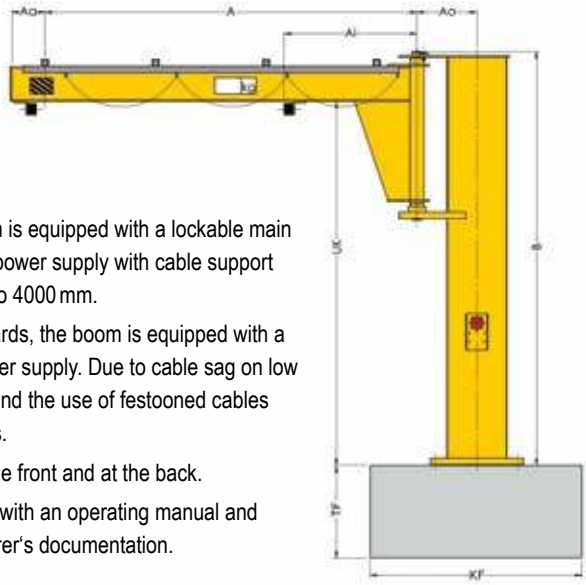

PFSP
Floor-mounted jib crane

Elevated boom with optimal height, slewing range 270°

Lightweight, twist-free steel girder construction with low headroom. The boom is fitted with a bearing, pillar made from reinforced steel pipe.

Depending on the size of the hoist and in combination with festooned power cables, restrictions in the slewing range of the boom may be possible.

Mounting

- Base flange with anchor bolts and template.
- Anchoring the base plate (welded) including mortar cartridges, anchor studs (complete with nuts, locknuts and washers).
- Anchoring the dowel base plate (bolted) including mortar cartridges, anchor studs (complete with nuts, locknuts and washers).
- Mobile unit for changeable location.

Optional

- Slew stoppers (buffers) can be fitted on building site for a pre-determined fixed slewing range.
- Slewing brake, to control the boom speed during slewing. Recommended for a boom length of more than 5 m or a headroom of more than 4 m. This prevents uncontrolled movement of the boom.
- Increased paint layer (120 µm) or hot-dip galvanisation for outdoor use.
- Manual locking device, to hold the boom in a fixed position (wind protection).
- Hoist cover for outdoor use.

Scope of delivery

- The electrical system is equipped with a lockable main switch, round-cable power supply with cable support pipes for booms up to 4000 mm.
- From 4500 mm upwards, the boom is equipped with a festooned cable power supply. Due to cable sag on low cranes, we recommend the use of festooned cables even on short booms.
- Trolley stoppers at the front and at the back.
- Cranes are supplied with an operating manual and complete manufacturer's documentation.

INFO

Mounting systems, please see page 157.

Standard delivery programme PFSP

Model	Capacity kg	Boom length in mm										
		2000	2500	3000	3500	4000	4500	5000	5500	6000	6500	7000
PFSP 125	125	•	•	•	•	•	•	•	•	•	•	•
PFSP 200	200	•	•	•	•	•	•	•	•	•	•	•
PFSP 250	250	•	•	•	•	•	•	•	•	•	•	•
PFSP 400	400	•	•	•	•	•	•	•	•	•	•	•
PFSP 500	500	•	•	•	•	•	•	•	•	•	•	•
PFSP 800	800	•	•	•	•	•	•	•	•	•	•	•
PFSP 1000	1000	•	•	•	•	•	•	•	•	•	–	–
PFSP 1600	1600	•	•	•	•	•	•	•	–	–	–	–
PFSP 2000	2000	•	•	•	•	•	–	–	–	–	–	–
PFSP 2500	2500	•	•	•	–	–	–	–	–	–	–	–

PFM
Floor-mounted jib crane

Elevated boom with optimal height, slewing range 360°

Lightweight, twist-free steel girder construction with low headroom. Compact rotating head for ideal construction dimensions; access from above ensures easy assembly. The boom is fitted with a roller bearing, pillar made from reinforced steel pipe.

Depending on the size of the hoist and in combination with festooned power cables, restrictions in the slewing range of the boom may be possible.

360°

Mounting

- Base flange with anchor bolts and template.
- Anchoring the base plate (welded) including mortar cartridges, anchor studs (complete with nuts, locknuts and washers).
- Anchoring the dowel base plate (bolted) including mortar cartridges, anchor studs (complete with nuts, locknuts and washers).
- Mobile unit for changeable location.

Optional

- Slew stoppers (buffers) can be fitted on building site for a pre-determined fixed slewing range.
- Slewing brake, to control the boom speed during slewing. Recommended for a boom length of more than 5 m or a headroom of more than 4 m. This prevents uncontrolled movement of the boom.
- Increased paint layer (120 µm) or hot-dip galvanisation for outdoor use.
- Manual locking device, to hold the boom in a fixed position (wind protection).
- Hoist cover for outdoor use.

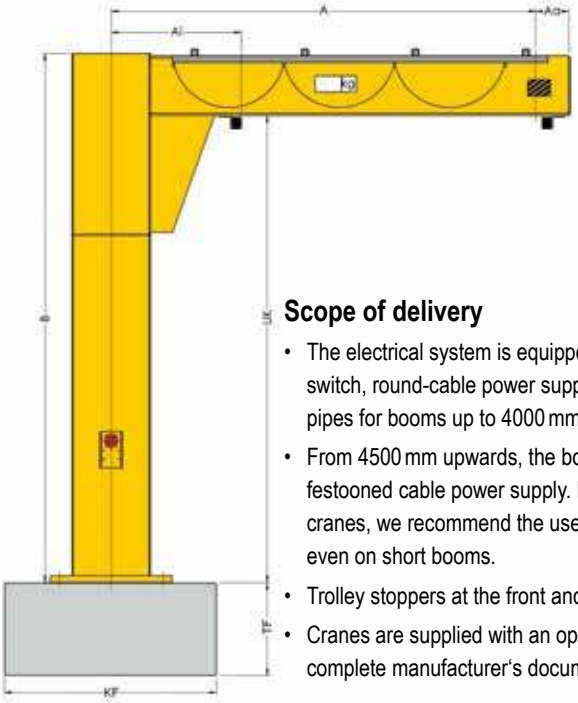

Scope of delivery

- The electrical system is equipped with a lockable main switch, round-cable power supply with cable support pipes for booms up to 4000 mm.
- From 4500 mm upwards, the boom is equipped with a festooned cable power supply. Due to cable sag on low cranes, we recommend the use of festooned cables even on short booms.
- Trolley stoppers at the front and at the back.
- Cranes are supplied with an operating manual and complete manufacturer's documentation.

INFO

Mounting systems, please see page 157.

Standard delivery programme PFM

Model	Capacity kg	Boom length in mm										
		2000	2500	3000	3500	4000	4500	5000	5500	6000	6500	7000
PFM 125	125	•	•	•	•	•	•	•	•	•	•	•
PFM 200	200	•	•	•	•	•	•	•	•	•	•	•
PFM 250	250	•	•	•	•	•	•	•	•	•	–	–
PFM 400	400	•	•	•	•	•	•	•	–	–	–	–
PFM 500	500	•	•	•	•	•	•	–	–	–	–	–
PFM 800	800	•	•	•	–	–	–	–	–	–	–	–
PFM 1000	1000	•	•	–	–	–	–	–	–	–	–	–

PFP
Floor-mounted jib crane

Elevated boom with optimal height, slewing range 360°

Heavy, robust twist-free steel girder construction. Structural steel crane-boom. Compact rotating head for ideal construction dimensions; access from above ensures easy assembly. The boom is fitted with a roller bearing, pillar made from reinforced steel pipe.

Depending on the size of the hoist and in combination with festooned power cables, restrictions in the slewing range of the boom may be possible.

Mounting

- Base flange with anchor bolts and template.
- Anchoring the dowel base plate (bolted) including mortar cartridges, anchor studs (complete with nuts, locknuts and washers).

Optional

- Electrically driven slewing gear.
- Slew stoppers (buffers) can be fitted on building site for a pre-determined fixed slewing range.
- Limit switches to limit the boom slewing range (before hitting a fixed object the motor switches off automatically).
- Increased paint layer (120 µm) or hot-dip galvanisation for outdoor use.
- Manual locking device, to hold the boom in a fixed position (wind protection).
- Hoist cover for outdoor use.

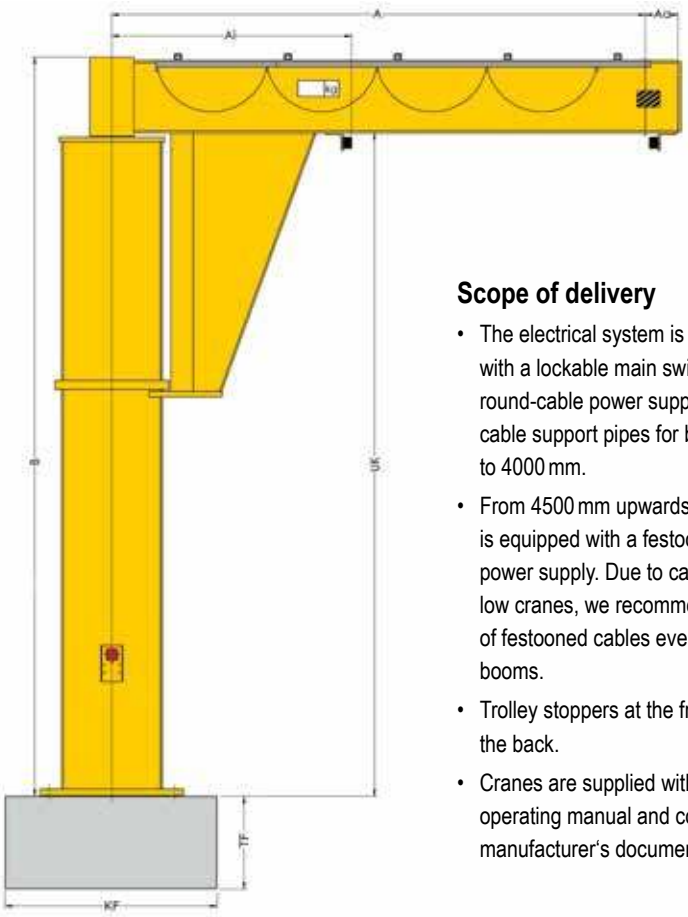

Scope of delivery

- The electrical system is equipped with a lockable main switch, round-cable power supply with cable support pipes for booms up to 4000 mm.
- From 4500 mm upwards, the boom is equipped with a festooned cable power supply. Due to cable sag on low cranes, we recommend the use of festooned cables even on short booms.
- Trolley stoppers at the front and at the back.
- Cranes are supplied with an operating manual and complete manufacturer's documentation.

Standard delivery programme PFP

Model	Capacity kg	Boom length in mm										
		2000	2500	3000	3500	4000	4500	5000	5500	6000	6500	7000
PFP 500	500	•	•	•	•	•	•	•	•	•	•	•
PFP 800	800	•	•	•	•	•	•	•	•	•	•	•
PFP 1000	1000	•	•	•	•	•	•	•	•	•	•	•
PFP 1600	1600	•	•	•	•	•	•	•	•	•	•	–
PFP 2000	2000	•	•	•	•	•	•	•	•	•	–	–
PFP 2500	2500	•	•	•	•	•	•	•	–	–	–	–
PFP 3200	3200	•	•	•	•	•	–	–	–	–	–	–

Safety distances in accordance with the accident prevention regulations for cranes DGUV Vorschrift 52 (BGV D6) § 11 and § 32

The following safety distances are only valid for floor-controlled cranes, without platforms, walkways or similar, on the jib with a load capacity of less than 10 t.

Movement manual	Safety distance		
	So = top	Ss = side	Su = bottom
Lifting	100*	100*	100*

Movement power-driven, floor-controlled	Safety distance		
	So = top	Ss = side	Su = bottom
Lifting	100*	100*	100*
Lifting and travelling	100*	100*	500
Lifting, travelling and slewing	100*	100* (500)	500

Safety distances for cranes with a load capacity up to 10000 kg
*No regulation (100 mm recommended)
Ss… for power-driven slewing motion, the safety distance must be complied with, if the possible crushing point is within the traffic and working area.
In general, the traffic and working area ranges from the upper edge of the ground up to 2.5 m room height.

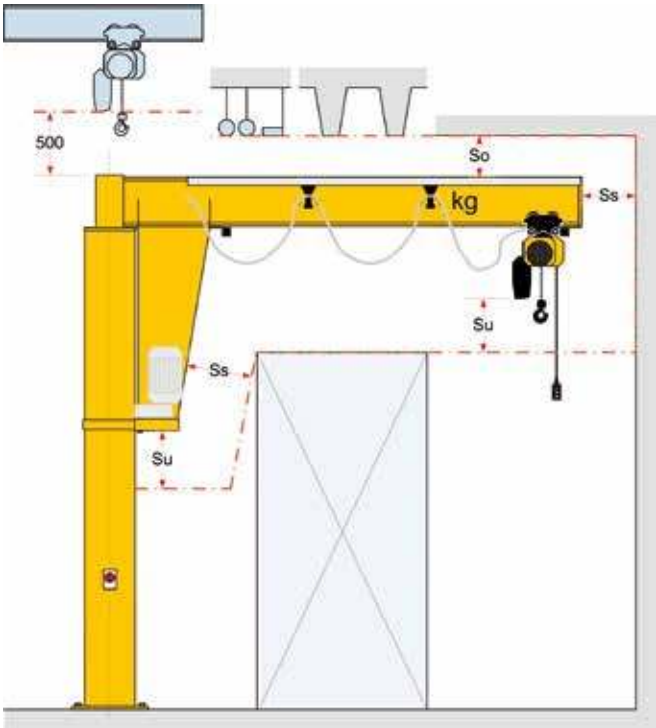

Mounting systems for floor-mounted jib cranes

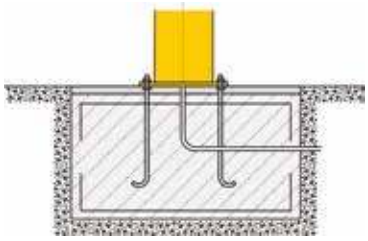

Anchor bolts with template for preparation of the foundation through the customer.

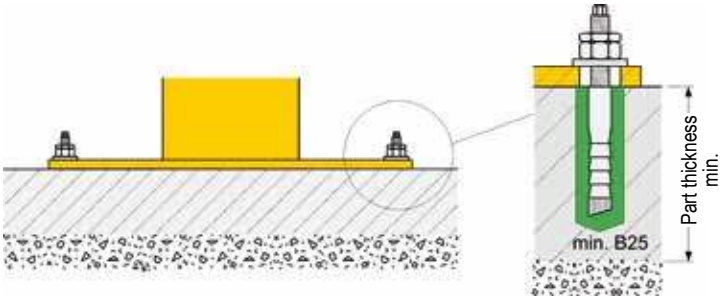

Standard base plate (welded) for anchor-bolt connection on existing concrete floor instead of welded-on base flange (only for operation inside a building) incl. HVZ dynamic anchor bolts.

INFO

Further capacities and boom lengths on request.

Further fastening possibilities such as weld-on brackets, ceiling mounting etc. on request.

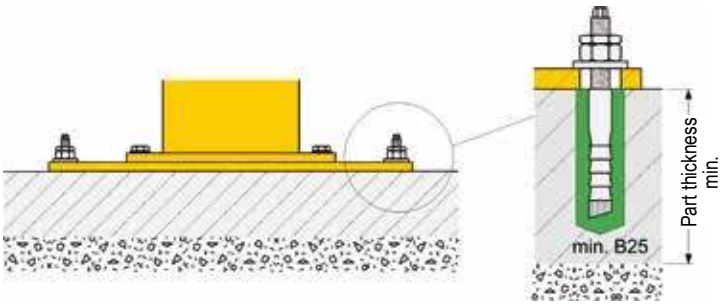

Dowel base plate for anchor-bolt connection on existing concrete floor (only for operation inside a building) incl. HVZ dynamic anchor bolts.

INFO

Operating conditions for standard and intermediate base plates

- The thickness of the concrete floor slab for M 12 x 95 HVC dynamic anchor bolts must be min. 190 mm.
- The thickness of the concrete floor slab for M 16 x 105 HVC dynamic anchor bolts must be min. 210 mm.
- The concrete floor slab must be horizontal and even.
- The concrete quality must meet min. B25 or C20/25.
- Mounting with through bolts consisting of base plate, through bolts and counter plates (for ceiling thicknesses up to 350 mm).
- Floor/wall mounting or floor/ceiling mounting on request.

Base plate for fastening pillar-mounted slewing jibs and slewing cranes without foundation

Some pillar-mounted slewing jibs and slewing cranes can be mounted by means of a standard base plate or an dowel base plate. No foundation is required, easy and quick assembly on the customer's existing reinforced concrete slab is possible. **Potential tripping hazard by protruding locknuts, unmarked or unsecured plate edges must be clearly marked.**

- The installation location of the crane must be selected in such a way that the base plate is mounted outside of traffic routes according to the German regulations for workplaces AStV para. 2. If this is not possible, the plate must be secured or marked in such a way that a hazard is avoided (e.g. by warning hatching along the edge of the plate).
- The base plate with tripping points must not protrude into escape routes or limit their prescribed min. widths.
- The measures for reducing hazards caused by tripping points must be taken by the operating company in cooperation with the safety expert.
- A warning sign as hazard reduction is a minimal measure and may not be sufficient in certain cases (e.g. in spite of warning signs, tripping incidences occur frequently, the warning sign is not recognised sufficiently in advance).

INFO

Plate dimensions, quantity, dimension and position of the chemical anchors depend on the crane type, load capacity and boom length of the crane (details and technical data according to the relevant crane data sheet).

Due to cable sag, we recommend that on low cranes festooned cables be used, even for a short boom length.

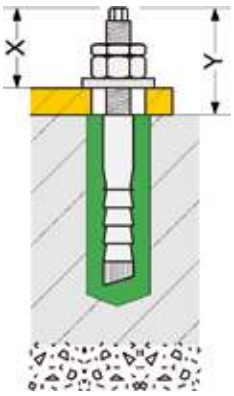

The smallest possible projection of the chemical anchor over the crane base plate "X" with an M12 anchor is approx. 33 mm, with M16 approx. 37 mm. This dimension can only be reached, if the concrete floor slab exceeds the above-mentioned min. thickness. The max. projection of the chemical anchor, measured from floor level "Y", is approx. 73 mm for M12 anchors and approx. 86 mm for M16 anchors, with the relevant min. floor slab thickness.

TDL
Moveable gantry crane

Yalesystems gantry crane for use in all areas, from craftsman's workshops, garages and industrial use. They are suitable for low to medium weight capacities and are also for outdoor use.

The cranes are moved by hand and are not dependant on a rail system.
The guidelines for moving Yalesystems gantry cranes and transporting loads should be strictly followed.

Optional

- Increased paint layer (120 µm) or hot-dip galvanisation for outdoor use.
- Hoist cover for outdoor use.
- Parking brake by threaded spindle.
- Power supply by festooned cables incl. flat cables, C type mounting rail, cable trolley, support arms and towing trolleys.

Scope of delivery

- 3-part construction with 2 robust rectangular steel-bar supports and 1 load carrier beam.
- Manually moveable
- Cranes are supplied with an operating manual and complete manufacturer's documentation.

INFO

Further capacities and boom lengths on request.

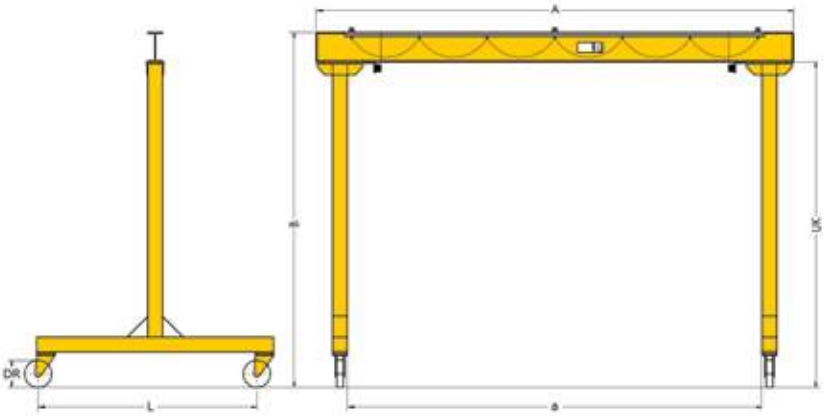

Standard delivery programme TDL

Model	Capacity kg	Boom length in mm 2500	3000	3500	4000	4500	5000	5500	6000
TDL 500	500	•	•	•	•	•	•	•	•
TDL 1000	1000	•	•	•	•	•	•	•	•
TDL 2000	2000	•	•	•	•	•	•	•	•
TDL 3200	3200	•	•	•	•	•	•	•	•

Boom clearance (UK): Standard 2500 mm, other dimensions on request.

Gantry width - inside (dimension a):
TDL-500/TDL-1000: Boom length A less 455 mm
TDL-2000/TDL-3000: Boom length A less 500 mm

Festooned cable system

The Yale festooned cable system kit contains all the parts necessary to install a power supply.

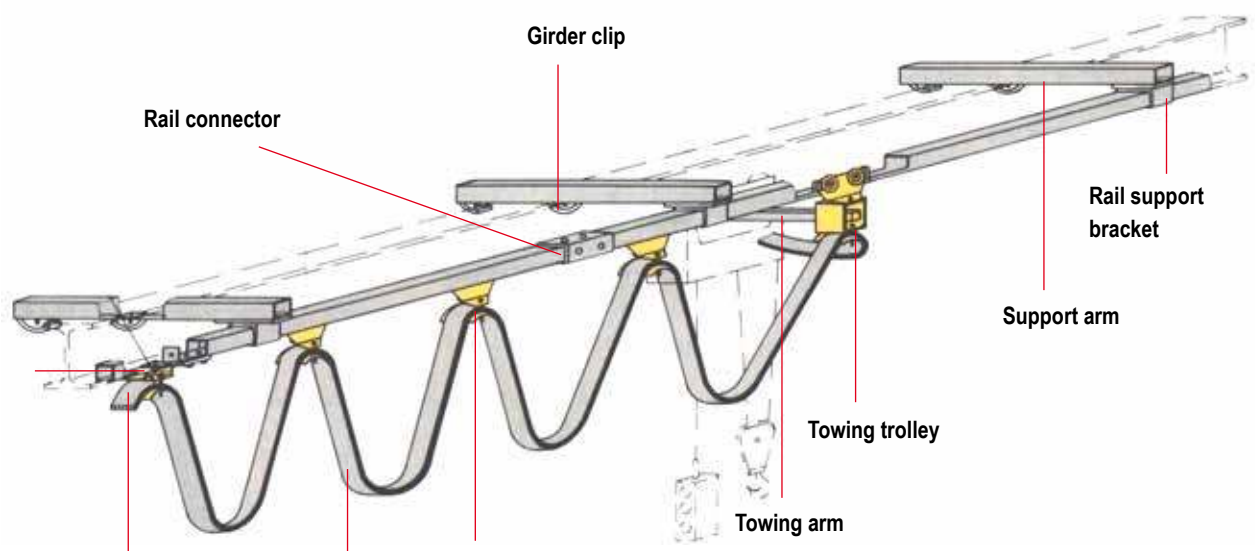

Features

- The PVC flat cable 4 x 2.5 mm² is suitable for all electric hoists with a power consumption of up to 25 A.
- The line sag is 700 mm. The cable and towing trolleys are made from plastic and can carry loads of up to 10 daN.
- The rollers are fitted with bronze bushes resp. ball bearings.
- The C-rail, rail support brackets and rail connectors are zinc-plated for added protection against corrosion.

Optional

- Mounting kit consisting of support arm and girder clips for connection to the beam.
- Towing arm for towing trolley.

Scope of delivery

- 1 end clamp
- 1 end stop
- 1 towing trolley
- 2 end caps
- 2 FI-fittings with locknuts
- 2 FI-fittings with locknuts 400 V, 50 Hz
- Two information signs according to UVV

INFO

Quantity of units dependant on track length.

Main switch

Scope of delivery festooned cable systems

Model	Art.-No.	Art.-No. Mounting kit	C-rails track length m	Transport distance max. m	PVC flat cable m	Cable trolleys	Rail support bracket	Rail connector
Festooned cable 4.0 m C-rail track length	N07700001	N07700010	4	3.5	9	2	4	0
Festooned cable 6.0 m C-rail track length	N07700002	N07700011	6	5.4	11	3	5	1
Festooned cable 8.0 m C-rail track length	N07700003	N07700012	8	7.3	13	5	6	1
Festooned cable 10.0 m C-rail track length	N07700004	N07700013	10	9.2	15	6	7	2
Festooned cable 12.0 m C-rail track length	N07700005	N07700014	12	11.0	17	8	8	2
Festooned cable 14.0 m C-rail track length	N07700006	N07700015	14	12.9	19	9	9	3
Festooned cable 16.0 m C-rail track length	N07700007	N07700016	16	14.8	21	11	10	3
Festooned cable 18.0 m C-rail track length	N07700008	N07700017	18	16.7	23	12	11	4
Festooned cable 20.0 m C-rail track length	N07700009	N07700018	20	18.5	25	14	12	4

Cable trolley

Towing trolley

Rail support bracket

Rail connector

C-Rail

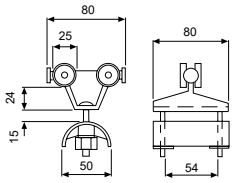

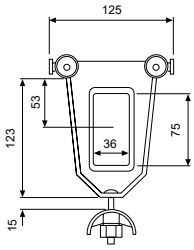

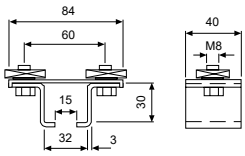

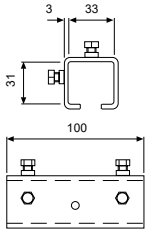

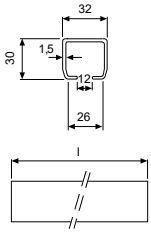

INFO

Optional: Mounting kit consisting of support arm and girder clips for connection to the beam.

Special applications e.g. for curves or cable trolley for round cables on request.

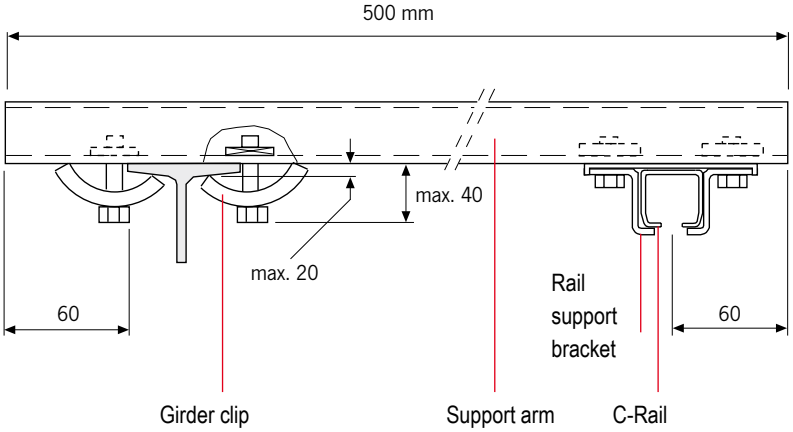

Tigrip® Load Hoisting Tackle

Tigrip® Lifting clamps and attachments have a reputation for reliability, quality and safety going back more than 35 years.
For transportation and handling of loads with a hoist the Tigrip® programme offers the optimum connection between hook and load for almost any application.

Tigrip® Crane Weighers

Also renown for many years are our precise crane weighers. Wherever weight has to be measured or forces have to be assessed the reliable and robust units can be used. Areas of application are practically unlimited.
Tigrip® - your first choice!

INFO

Please note our user instructions at the beginning of each chapter

Table of contents

	Page
Grabs & Clamps	**168 - 173** **176 - 201**
Permanent load lifting magnets	**174 - 175**
C-hooks	**202 - 204**
Barrel grabs & Crate grabs	**206 - 211**
Load hoisting tackle for underground construction	**212 - 215**
Spreader beams	**216 - 225**
Crane forks	**226 - 227**
Crane weighers	**228 - 231**
Load indicator	**232 - 233**

Yale

TIGRIP®

TIGRIP
Mod. TBL 1,5 plus Bj. '13
Ser. No.
Tragf./WLL
Greifb./Jaw Cap.
Eigengew./Weight
1,5 t
0-20 mm
3,0 kg
COLUMBUS McKINNON
Bedienungsanleitung beachten!
Use Operating Instructions!

INFO

This user information presents a general overview regarding the operation of some plate clamps and does not substitute the existing operating instructions for specific load hoisting tackle!

Lifting operations with load hoisting tackle may be carried out by competent persons (trained in theory and practice) only.

When operated correctly, our Tigrip products will offer the highest degree of safety, avoid damage to products and people and present a long life expectancy.

Modification of delivery condition

Design and construction of the load hoisting tackle may not be altered without authorization of the manufacturer, e.g. by bending, welding, grinding, cutting-off parts, adding boreholes, removal of safety devices like locking mechanisms, bolts, shear pins etc. Otherwise the validity of the declaration of conformity will be void and any liability and warranty of the manufacturer ceased.

Limitations of operation

Loading

The rated capacity (WLL) indicated on the tackle is the maximum load which must not be exceeded.

Temperature

Clamps without protective lining may normally (depending on manufacturer) be operated at ambient temperatures of -40°C up to +100°C without capacity reduction. Clamps with protective lining may be subject to reduced temperature areas due to application of affixed linings, e.g. model TBP and TSB, which can be operated from -20°C up to +40°C.

Shock loading, swinging of load

The indicated capacities are based on shock-free loading of the tackle. Light bumps as occurred during lifting and lowering as well as transporting of load with the crane are admitted. Heavier shock loadings (e.g. crashing against obstacles during transport) as well as swinging of the load are strictly forbidden!

Chemicals

Load hoisting tackle may not be operated without hesitation in the area of chemicals or chemical vapours – consult our specialists beforehand. Hoisting tackle which has been subject to chemicals or vapours must be taken out of service and should be returned to us for inspection.

Transport of people

Transport of people with hoisting equipment and tackle is generally forbidden!

Operation in danger zones

Lifting or transport of loads must be avoided while personnel are in the danger zone. When using clamps or grabs without a positive fit but with force fit or friction fit the load must not be suspended above people – see AMVO §18(6)!

Lifting products

Load hoisting tackle have been designed for specific applications and must not be used for other jobs without prior authorization of the manufacturer. This refers e.g. to the thickness of material (jaw capacity of the clamp), surface condition, hardness* and temperature of material. Relative information is given in the respective operating instructions. These have to be available to the operator to ensure safe handling of the product.

*Please observe that for special steel plates the surface hardness may deviate substantially from the core hardness, e.g. for cold work steel.

Inspection before initial operation

- Ensure that the surface of the steel plate, in the area where the clamp is to be attached, is dry and free from grease, paint, dirt and scale and is not coated, so that the teeth resp. the protective lining on the moving jaw can make good contact with the surface of the load.
- Check the fixed jaw and the moving jaw for wear and defects. Both jaws must have clean profiles and teeth must not be heavily worn (observe respective advice given in the operating instruction, guiding value max. 30% wear). Protective linings must not be contaminated, damaged, uneven or heavily worn.
- The entire hoisting tackle has to be checked for damage, corrosion, cracks or deformations.
- It should be easy to open and close the clamp.
- Check the function of the spring. In the CLOSED position this must present a noticeable spring pressure force when the hook ring is pressed down.

Application advices

- Load hoisting tackle must always be in perfect condition and provided with a legible identity plate.
- Prior to initial operation and every time before work, the tackle is to be visually inspected for obvious deficiencies!
- The suspension eye must have sufficient space in the load hook and move freely. A safety latch to prevent accidental out-hooking of the tackle must be available!
- Do not lift or transport loads while personnel are in the danger zone and do not allow people to pass under a suspended load. Note: a safe form-fit attachment requires sufficient hardness of the load. Ensure that the load or parts thereof cannot slip and fall down!
- The load hoisting tackle must be positioned over the gravity centre of the load, so that a swinging movement is avoided.

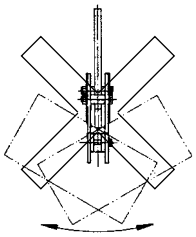

- If longer sheets of metal or profiles are to be transported, we recommend using two clamps to prevent load swinging. The clamps can be used in combination with a spreader beam or with double strand chain slings and clamps with hinged hook ring (e.g. model TBS). Observe the maximum angle from the vertical and possible capacity restrictions.
- Clamps without hinged hook ring must not be loaded laterally! (Slanted attachment of the clamp onto the steel plate in pulling direction of the clamp is normally not permitted, as the jaws would grip too close to the edge of the plate. Thus a correct fit of the clamp on the plate is not assured!)
- Always insert the load fully into the mouth of the clamp and make sure that the housing has contact on either side of the plate.

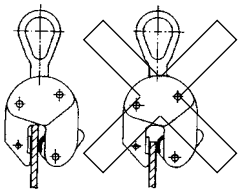

- Clamps designed for the transport of steel plate in vertical position may only accept one single plate at a time. The clamping effect must be assured on either side of the load!
- Special clamps are available for the transport of steel plate in horizontal position which allows handling of several plates at a time.
- A load must not be suspended or left unattended in raised or tensioned condition for a longer period of time.
- When attaching the clamp, the operator must ensure that neither the clamp, slings or load pose a danger to himself or other personnel.
- The operator may not move the load until he is convinced that the load is correctly attached and all personnel are outside the danger zone.
- Please take note of possible capacity restrictions depending on the pivoting range resp. pulling direction of the clamp. (Note: Not all clamp types on the market are designed for a pivoting range of 180° – strictly observe the operating instructions!)
- In case of malfunction stop using the load hoisting tackle immediately.

INFO

INFO

Due to the limitations of space in this catalogue we could not respond to all applications.
Please contact us for further information!

INFO

Maintenance and repair

- To ensure safe operation, all load hoisting tackle must be subjected to regular inspections according to the maintenance instructions given by the manufacturer.
- Load hoisting tackle which are due for maintenance (normally once per year, unless adverse working conditions dictate shorter periods) or products with obvious defects may be returned to us for inspection and repair.
- Inspections and tests must be performed by competent persons or specialist workshops that use original spare parts.

Inspections

- Inspections are visual and functional and shall establish that the load hoisting tackle is safe and has not been damaged by incorrect transport or storage. In addition check for damage, wear, corrosion and other deficiencies as well as completeness and function of safety devices. Inspections are instigated by the user.
- All load hoisting tackle has to be cleaned prior to inspection. The cleaning procedure must not cause chemical damages (e.g. no acid – embrittlement), no incorrect temperature stress by e.g. flame cleaning or possible concealment of cracks due to excessive material loss (sand blasting)! We shall be pleased to consult you in this respect. Please submit your load hoisting tackle for inspection in clean condition. This will reduce inspection costs considerably!

Criteria for disposal of load hoisting tackle

Load hoisting tackle must no longer be operated if e.g. :

- The identification (identity plate) is missing or illegible.
- Housing, components and suspension of the tackle present obvious deficiencies, e.g. cuts, grooves, cracks, excessive corrosion, staining due to heat, signs of subsequent welding resp. spatters (which cannot be easily removed) and leave stains.
- Ropes show breakages of wires resp. bruises (criteria for disposal of ropes are given in classification DIN 15020), damages to the rope sleeve and similar failures.
- The load chain presents twisted or distorted links or shows an elongation of 5 % resp. undergoes the averaged nominal thickness of the link by more than 10 %.
- The opening (C) of either suspension or load hook has increased/deformed by more than 10 % of the nominal dimension or shows wear in the hook mouth (dimensions B resp. D) of more than 5 %.

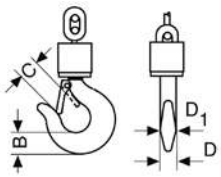

- If the inspection revealed that the tackle has been overloaded or deteriorated it can only be used again after careful inspection and repair – if necessary.

INFO

You will find the General Terms and Conditions at the end of the catalogue.

Please note the information on our training courses on page 4.

Technical questionnaire to identify the suitable Tigrip® load hoisting tackle

Company: _____ Date: _____

Contact: _____ e-Mail: _____

Phone: _____ Fax: _____

Clamps and grabs

Information about the load:

What will be transported?

Weight	min.	_____	kg	-	max. _____	kg
Length	min.	_____	mm	-	max. _____	mm
Width	min.	_____	mm	-	max. _____	mm
Height	min.	_____	mm	-	max. _____	mm
External diameter	min.	_____	mm	-	max. _____	mm
Internal diameter	min.	_____	mm	-	max. _____	mm

Material ☐ Steel ☐ Concrete ☐ Wood ☐ Paper ☐ Others

_____

Surface hardness for steel: _____ HRC

Surface condition ☐ Oiled ☐ Greasy ☐ Dry ☐ Scales ☐ Others

_____

How should/may the load be grabbed/clamped:

☐ Grabbed from underneath ☐ Jaws ☐ Protective lining ☐ Others

_____

Information about the clamp/grab:

What kind of grab will be needed?

Type of crane hook or dimensions A - B

Model: _____ A = _____

B = _____

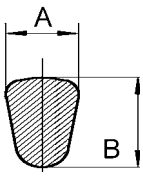

Other restrictions: _____

TBL/TBL plus Plate clamp with safety lock

Capacity 500 - 3000 kg

This clamp is primarily used for transporting single steel plates in the vertical position, as well as lifting and turning through 180°. This clamp can also be used for transporting steel constructions and profiles. It is recommended to use a pair of plate clamps in conjunction with a spreader beam for large sized sheets and long materials which have a tendency to sag.

The jaw can be opened and closed with the locking lever (except for the TBL 0.5 t which uses a positive spring-loaded cam). The safety lock overrides the spring-loaded cam, preventing the clamp from opening even when there is no load.

This plate clamp is service-friendly, making it easy to exchange parts, which are available individually or in kits. Clamp repair is available by the factory, or can be done by certified and experienced staff.

The TBL 0.5 is equipped with a safety lock (positive spring-loaded cam), but comes without locking lever.

INFO

The surface hardness of the material must not exceed HRC 30/Brinell 300.

The min. load is 10 % of the nominal WLL, except for model TBL 1,5 plus, the min. load here is 100 kg.

Technical data TBL/TBL plus

Model	Art.-No.	Capacity kg	Jaw capacity Z mm	Weight kg
TBL 0,5	N50100051	500	0 - 16	1.5
TBL 1,5 plus	N50100056	1500	0 - 20	3.0
TBL 2,0 plus	N50100057	2000	0 - 32	9.3
TBL 3,0 plus	N50100058	3000	0 - 32	9.3

Dimensions TBL/TBL plus

Model	TBL 0,5	TBL 1,5 plus	TBL 2,0 plus	TBL 3,0 plus
A, mm	99	126	192	192
B, mm	195	225	312	312
Ø C, mm	29	50	80	80
D, mm	33	49	75	75
E, mm	47	70	96	96
F, mm	50	82	100	100
G, mm	48	55	81	81
H, mm	11	12	20	20
I, mm	16	20	24	24

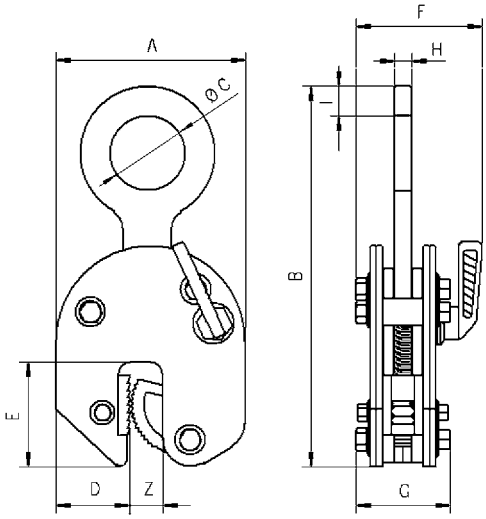

TBL
Plate clamp
with safety lock

Capacity 4000 - 30000 kg

This clamp is primarily used for transporting single steel plates in the vertical position, as well as lifting and turning through 180°. This clamp can also be used for transporting steel constructions and profiles. It is recommended to use a pair of plate clamps in conjunction with a spreader beam for large sized sheets and long materials which have a tendency to sag.

These plate clamps have the same design and applications as the clamp model TBL with a capacity from 500 - 3000 kg.

INFO

The surface hardness of the material must not exceed HRC 30/Brinell 300.

The min. load is 10 % of the nominal WLL!

Technical data TBL

Model	Art.-No.	Capacity kg	Jaw capacity Z mm	Weight kg
TBL 4,0 S	N50100005	4000	0 - 32	11.2
TBL 4,0 L	N50100006	4000	30 - 60	11.9
TBL 6,0 S	N50100021	6000	0 - 50	20.6
TBL 6,0 L	N50100008	6000	50 - 100	23.2
TBL 8,0 S	N50100022	8000	0 - 50	24.2
TBL 8,0 L	N50100023	8000	50 - 100	28.8
TBL 10,0 S	N50100024	10000	0 - 50	29.5
TBL 10,0 L	N50100025	10000	50 - 100	35.1
TBL 15,0 S	N50100015	15000	0 - 50	76.0
TBL 15,0 L	N50100016	15000	50 - 100	86.0
TBL 20,0 S	N50100017	20000	0 - 65	123.0
TBL 20,0 L	N50100018	20000	65 - 130	135.0
TBL 30,0 S	N50100019	30000	0 - 65	195.0
TBL 30,0 L	N50100020	30000	65 - 130	256.0

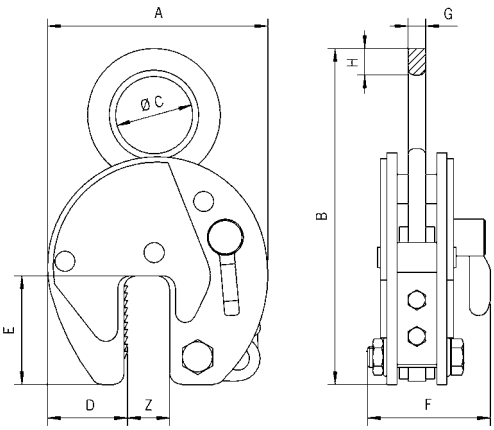

Dimensions TBL

Model	TBL 4,0 S	TBL 4,0 L	TBL 6,0 S	TBL 6,0 L	TBL 8,0 S	TBL 8,0 L	TBL 10,0 S	TBL 10,0 L	TBL 15,0 S	TBL 15,0 L	TBL 20,0 S	TBL 20,0 L	TBL 30,0 S	TBL 30,0 L
A, mm	197	228	293	362	293	362	293	362	360	460	462	560	462	560
B, mm	339	339	442	482	450	482	503	503	550	615	674	724	667	732
Ø C, mm	80	80	89	89	89	89	110	110	130	130	130	130	60	60
D, mm	68	68	95	114	95	114	95	114	125	175	165	195	165	195
E, mm	93	100	143	143	143	143	143	143	162	162	210	210	210	210
F, mm	110	110	129	129	129	129	139	139	204	204	235	235	295	295
G, mm	20	20	20	20	20	20	25	25	45	45	45	45	65	65
H, mm	32	32	35	35	42	42	45	45	55	55	65	65	66	67

TBS plus
Plate clamp
with hinged hook ring and safety lock

Capacity 1000 - 3000 kg

The TBS plate clamp with hinged hook ring can be used for the safe handling of plates at various angles. It can lift plates from the horizontal and put down in the vertical or alternatively lift it over the edge by gripping it from the side. The hinged hook ring ensures adequate clamping force in every position. Depending on the angle of usage capacity restrictions have to be taken into account, as shown in the diagram below.

The hinged hook ring has the added advantage of providing enough clamping force to hold a plate safely. Even when transporting large-sized plates with the 2-legged lifting system slipping of the load and damage to the clamp is avoided.

In addition to transporting plates, this clamp is suitable for turning steel structures and welded constructions.

INFO

The surface hardness of the material must not exceed HRC 30/Brinell 300.

The min. load is 10 % of the nominal WLL!

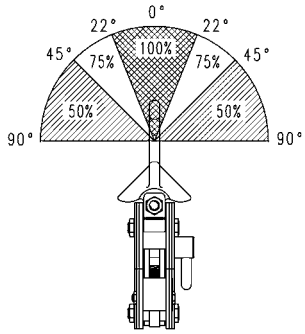

Technical data TBS plus

Model	Art.-No.	Capacity kg	Jaw capacity Z mm	Weight kg
TBS 1,0 plus	N50200312	1000	0 - 20	3.2
TBS 2,0 plus	N50200313	2000	0 - 32	9.4
TBS 3,0 plus	N50200314	3000	0 - 32	9.4

Dimensions TBS plus

Model	TBS 1,0 plus	TBS 2,0 plus	TBS 3,0 plus
A, mm	126	192	192
B, mm	270	382	382
Ø C, mm	50	80	80
D, mm	49	75	75
E, mm	70	96	96
F, mm	95	132	132
G, mm	63	92	92
H, mm	12	20	20
I, mm	23	30	30

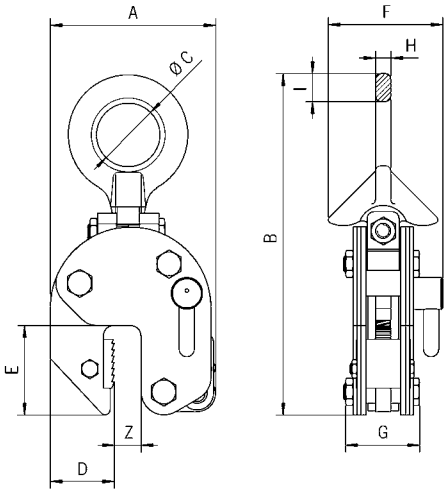

TBS
Plate clamp with pivoting shackle and safety lock

Capacity 4000 - 10000 kg

INFO

The surface hardness of the material must not exceed HRC 30/Brinell 300.

The min. load is 10 % of the nominal WLL!

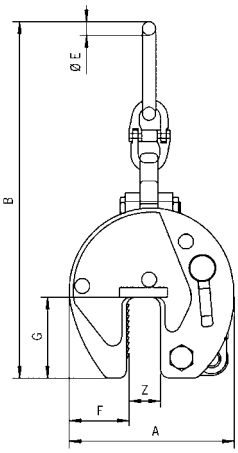

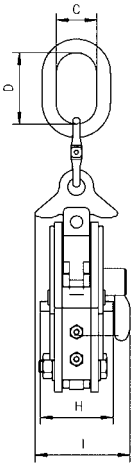

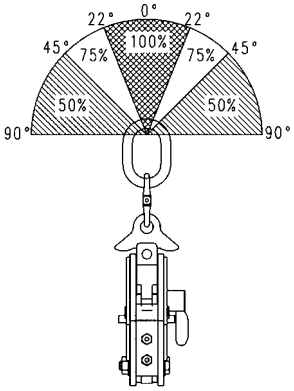

Technical data TBS

Model	Art.-No.	Capacity kg	Jaw capacity Z mm	Weight kg
TBS 4,5	N50200309	4500	0 - 50	34.4
TBS 6,0 S	N50200305	6000	0 - 50	38.0
TBS 6,0 L	N50200306	6000	50 - 100	42.0
TBS 8,0 S	N50200307	8000	0 - 50	39.0
TBS 8,0 L	N50200310	8000	50 - 100	42.4
TBS 10,0 S	N50200308	10000	0 - 50	68.0
TBS 10,0 L	N50200311	10000	50 - 100	80.0

Dimensions TBS

Model	TBS 4,5	TBS 6,0 S	TBS 6,0 L	TBS 8,0 S	TBS 8,0 L	TBS 10,0 S	TBS 10,0 L
A, mm	292	292	367	292	367	360	446
B, mm	675	737	785	737	785	903	921
C, mm	95	95	98	98	98	110	112
D, mm	180	176	180	176	180	195	195
Ø E, mm	27.8	27.8	27.8	27.8	27.8	33	33
F, mm	95	95	115	95	115	125	168
G, mm	143	143	143	143	143	162	162
H, mm	135	137	135	136	136	170	170
I, mm	185	188	188	210	210	223	223

TAG
Universal grab

Capacity 350 - 5000 kg

TWG
- with modified side plates

Capacity 750 - 1250 kg

The universal grabs TAG and TWG save time, as it does not require chains, cables etc. when hoisting and loading material.

The large jaw capacity allows to tackle a variety of sizes with only one clamp. It can be used for loading machine tools, lifting steel constructions, welding and assembly jobs as well as for concrete and prefabricated pieces.

The universal grab with a small outside measurement is a specially designed grab for use on hard to reach places (e.g. lathe machine).

Features

- The automatic clamping force is retained by a positive tension spring, even if there is slack in the chain.
- The “Quick-Open” type universal grab opens by lifting and simultaneously pulling the lever out against the tension spring. The jaw is closed by the spring.
- Universal grabs up to 2.0 t capacity are equipped with round chains, clamps with increased capacities are delivered with roller chains.

Optional

- Model TAG up to 1.25 t WLL is available with protective lining on the clamping jaws on request. This results in a decrease of the jaw capacity by 10 mm.

INFO

The surface hardness of the material must not exceed HRC 30/Brinell 300.

The min. load is 10 % of the nominal WLL!

TWG with modified side plates for use in confined spaces (e.g. lathe machine).

Technical data TAG

Model	Art.-No.	Capacity kg	Jaw width mm	Jaw capacity mm	Weight kg
TAG 0,35/100	N50300801	350	100	0 - 100	8.7
TAG 0,35/200	N50300802	350	200	90 - 200	16.3
TAG 0,75/100	N50300803	750	100	0 - 100	8.6
TAG 0,75/200	N50300804	750	200	90 - 200	16.6
TAG 1,25/100	N50300805	1250	100	0 - 100	14.9
TAG 1,25/200	N50300806	1250	200	90 - 200	24.3
TAG 2,0/100	N50300807	2000	100	0 - 100	20.8
TAG 2,0/200	N50300808	2000	200	90 - 200	29.1
TAG 3,0/90	N50300809	3000	90	5 - 90	26.5
TAG 5,0/90	N50300810	5000	90	5 - 90	30.5
TAG 5,0/170	N50300811	5000	170	80 - 170	43.8

Technical data TWG

Model	Art.-No.	Capacity kg	Jaw width mm	Jaw capacity mm	Weight kg
TWG 0,75/100	N50300821	750	100	30 - 100	11.0
TWG 1,25/100	N50300822	1250	100	30 - 100	16.0

Dimensions TAG

Model	TAG 0,35/100	TAG 0,35/200	TAG 0,75/100	TAG 0,75/200	TAG 1,25/100	TAG 1,25/200	TAG 2,0/100	TAG 2,0/200	TAG 3,0/90	TAG 5,0/90	TAG 5,0/170
A, mm	264	382	264	382	320	382	328	375	297	297	354
B, mm	259	434	259	434	289	434	415	515	290	290	423
C, mm	128	195	128	195	128	195	135	195	136	136	180
D, mm	100	156	100	156	100	156	115	165	106	106	155
E, mm	100	200	100	200	100	200	100	200	90	90	170
F, mm	85	120	85	120	85	120	105	160	91	91	118
G, mm	550	760	550	760	570	760	571	750	570	570	620
H, mm	75	75	75	75	75	75	75	75	82	82	82
I, mm	121	121	121	121	121	121	121	121	111	111	111
J, mm	20	20	20	20	20	20	20	20	32	32	32
K, mm	78	90	83	90	83	90	105	105	137	147	147

Dimensions TWG

Model	TWG 0,75/100	TWG 1,25/100
A, mm	264	320
B, mm	209	255
C, mm	128	128
D, mm	100	100
E, mm	100	100
F, mm	35	51
G, mm	550	570
H, mm	75	75
I, mm	121	121
J, mm	20	20
K, mm	83	83

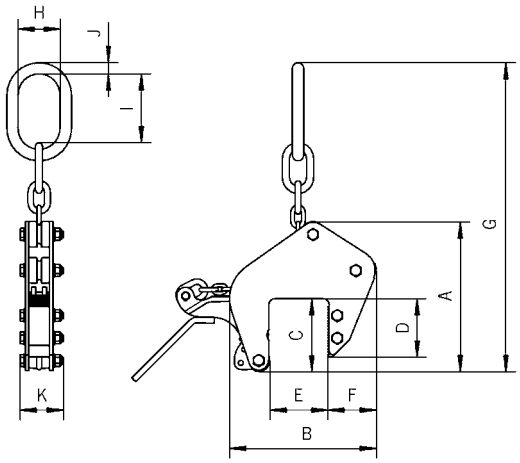

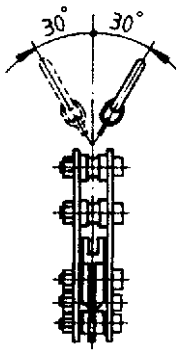

The angle from the vertical must not exceed 30°!

TPM
Permanent load lifting magnet

Capacity
100 - 3000 kg (Flat material)
50 - 1500 kg (Round material)

TPM load lifting magnets are ideal tools for easy, quick and thus economical transport of heavy objects made of ferro-magnetic material. Typical operating areas are workshops and warehouses, loading and unloading of machines as well as construction of jigs and fixtures.

Compact design of the units for a large number of applications.

The load is not affected mechanically which allows lifting of flat as well as round material. The efficient magnet body provides strong lifting capacity at low dead weight. The permanent magnets do not require electric energy and will leave only minor residual magnetism on the material after use.

The magnets are activated/deactivated easily by turning a locking lever. In activated condition the hand lever will be safely locked and thus prevent unintended demagnetising.

The selection of the appropriate magnet model should be made under consideration of the varying conditions of the contact surface, kind of material alloy and plate thickness/ bar diameter (see table).

INFO

In order to achieve a maximum capacity, the contact surface should be bright and free from dirt, oil, grease, scale, corrosion, paint etc.

Technical data TPM

Model	Art.-No.	Flat material			Round material			Test load	Weight
		Capacity[1] max. kg	Material thickness min. at max. capacity mm	Length of material max. mm	Capacity[1] max. kg	Diameter min. - max. mm	Length of material max. mm	kg	kg
TPM 0,1	N56400001	100	14	2000	50	40 - 300	2000	300	5.3
TPM 0,3	N56400002	300	20	2500	150	60 - 300	2500	900	13.5
TPM 0,5	N56400003	500	24	3000	250	60 - 400	3000	1500	27.5
TPM 0,8	N56400004	800	34	3500	400	60 - 400	3500	2400	52.0
TPM 1,0	N56400005	1000	40	3500	500	80 - 400	3500	3000	57.0
TPM 2,0	N56400006	2000	55	3500	1000	100 - 400	3500	6000	125.0
TPM 3,0	192019927	3000	65	3500	1500	200 - 500	3500	9000	195.0

[1]gemessen auf ziehblankem Material S 235 JR (ST 37), Luftspalt < 0,1 mm

Dimensions TPM

Model	TPM 0,1	TPM 0,3	TPM 0,5	TPM 0,8	TPM 1,0	TPM 2,0	TPM 3,0
A, mm	122	192	232	302	332	392	497
B, mm	69	95	120	154	154	196	220
C, mm	185	225	270	320	320	420	453
D, mm	160	250	250	450	450	450	600

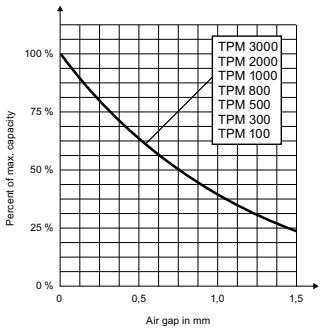

Diagram: WLL/air gap

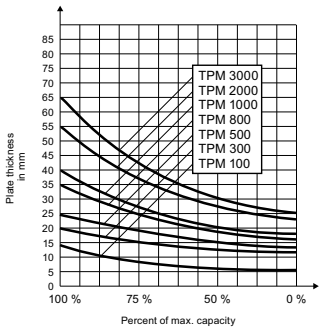

Diagram: WLL/material thickness

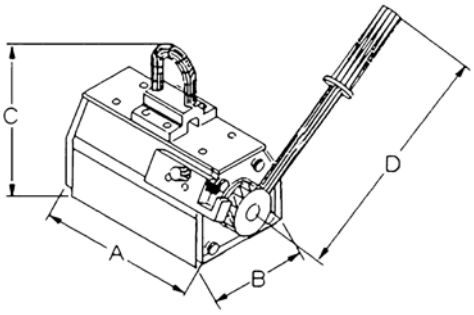

TPM

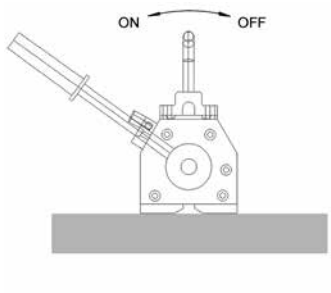

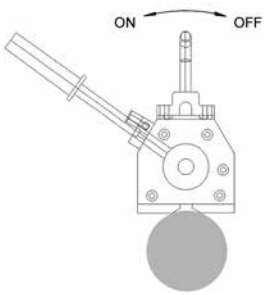

Correct use On/Off

Reduction of capacity	% of capacity
Temperature ≤ 60 °C	100 %
Humidity ≤ 80 %	100 %
St 52	95 %
Alloy steel	80 %
High carbon steel	70 %
Cast iron	45 %
Nickel	10 %
Austenitic, stainless steel	0 %
Brass	0 %
Aluminium	0 %

TBP
Non-marring grab

Capacity 500 - 1500 kg

The TBP non-marring grab is suitable for lifting, turning and transporting of plates with a sensitive surface without leaving behind indentations.

It can be used for aluminium and stainless steel plate or those with an extremely hard surface.

INFO

The surface of the plate must be free of oil, grease or any other liquid to ensure safe transport.

The min. load is 10 % of the nominal WLL!

Temperature range from -20 °C up to +60 °C

Technical data TBP

Model	Art.-No.	Capacity kg	Jaw capacity Z mm	Weight kg
TBP 0,5	N51502419	500	0 - 10	3.0
TBP 1,5	N51502420	1500	0 - 20	12.6

Dimensions TBP

Model	TBP 0,5	TBP 1,5
A, mm	127	215
B, mm	200	345
D, mm	52	75
E, mm	69	135
F, mm	87	131
G, mm	76	118
H, mm	13	20
I, mm	20	24
Ø C, mm	55	85

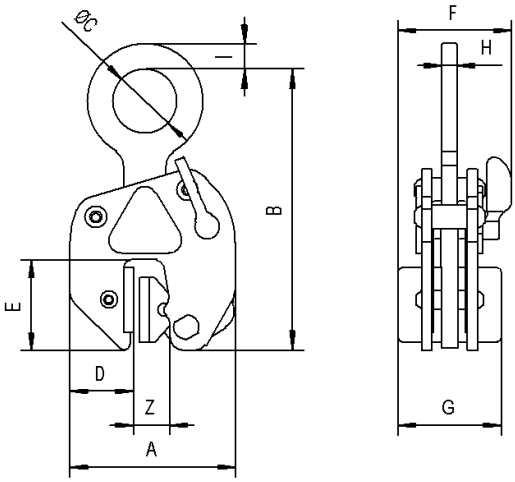

TSB
Non-marring grab with chain

Capacity 750 - 1250 kg

The TSB grab has parallel-facing jaws that equally distribute the clamping pressure over a relatively large surface area. This makes the grab attractive for plate material with sensitive surfaces. The protective lining “Bremsit” offers an outstanding friction coefficient, thereby enhancing the grip of the jaws. This lining can be easily replaced when worn.

Similar to the universal grab, this grab has a large jaw capacity and the security of a safety lock device with a hold-open/hold-closed feature.

INFO

The surface of the plate must be free of oil, grease or any other liquid to ensure safe transport.

The min. load is 10 % of the nominal WLL!

Temperature range from -20 °C up to +60 °C

Technical data TSB

Model	Art.-No.	Capacity kg	Jaw capacity Z mm	Weight kg
TSB 0,75/65	N51202202	750	0 - 65	11.8
TSB 1,25/65	N51202203	1250	0 - 65	16.7

Dimensions TSB

Model	TSB 0,75/65	TSB 1,25/65
A, mm	272	330
B, mm	260	280
C, mm	128	128
D, mm	100	100
E, mm	79	90
F, mm	78	90

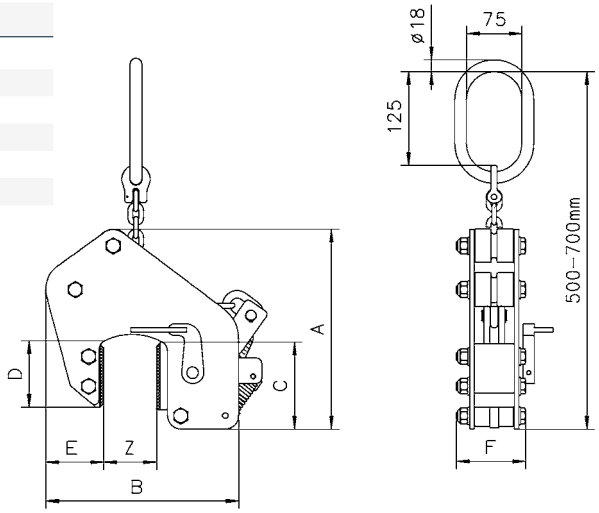

TTG
Girder grab
for horizontal transport

Capacity 500 - 7500 kg

The girder grab TTG is designed for the horizontal transport of girders, metal plates, profiles etc. The offset suspension lug ensures that the flange of the girder will be kept practically horizontal during transport.

The positive safety lock keeps the clamp safely locked, even before the lift begins. This allows the operator to place the clamp, lock it closed and move away from the load. The lever ensures easy opening and closing of the clamping jaw and has a “lock open” feature.

INFO

When transporting long girders, it is recommended to use a pair of clamps in conjunction with a spreader beam.

Technical data TTG

Model	Art.-No.	Capacity kg	Jaw capacity mm	Weight kg
TTG 0,5	N50901950	500	0 - 20	2.9
TTG 1,5	N50901951	1500	0 - 30	6.8
TTG 3,0	N50901952	3000	0 - 35	11.3
TTG 4,5	N50901953	4500	0 - 40	14.8
TTG 7,5	N50901954	7500	0 - 45	30.0

Dimensions TTG

Model	TTG 0,5	TTG 1,5	TTG 3,0	TTG 4,5	TTG 7,5
Ø A, mm	50	70	80	90	110
B, mm	36	43	55	60	64
C, mm	25	35	42	46	55
D, mm	148	140	180	196	222
E, mm	200	180	214	248	304
F, mm	27	40	40	40	50
G, mm	20	30	32	35	42
H, mm	95	155	190	207	237
I, mm	110	230	284	314	367
J, mm	10	15	20	20	22
K, mm	56	50	60	64	90
L, mm	85	100	114	117	143
M, mm	13	16	20	25	30

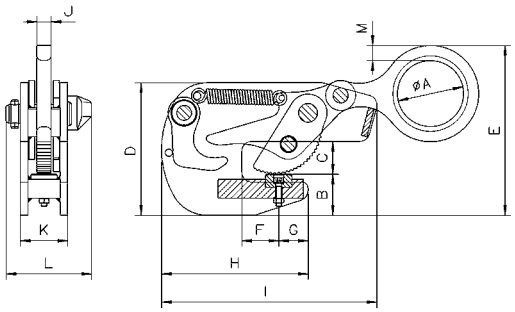

TTR
Girder grab
for vertical transport

Capacity 750 - 3000 kg

The girder grab TTR is designed for vertical transport, especially for lifting and stacking of girders. The unique position of the offset suspension lug keeps the girder virtually in a vertical position during transport.

The positive safety lock keeps the clamp safely locked, even before the lift begins. This allows the operator to place the clamp, lock it closed and move away from the load. The lever ensures easy opening and closing of the clamping jaw and has a “lock open” feature.

INFO

When transporting long girders, it is recommended to use a pair of clamps in conjunction with a spreader beam.

Technical data TTR

Model	Art.-No.	Capacity kg	Jaw capacity mm	Weight kg
TTR 0,75	N51702551	750	5 - 16	3.1
TTR 1,50	N51702552	1500	5 - 25	6.8
TTR 3,00	N51702553	3000	5 - 28	10.9

Dimensions TTR

Model	TTR 0,75	TTR 1,50	TTR 3,00
A, mm	24	33	37
B, mm	40	53	56
C, mm	132	176	194
D, mm	62	76	78
E, mm	145	190	208
F, mm	118	152	163
Ø G, mm	50	70	80
H, mm	12	15	20
I, mm	12	17	23
K, mm	53	69	85

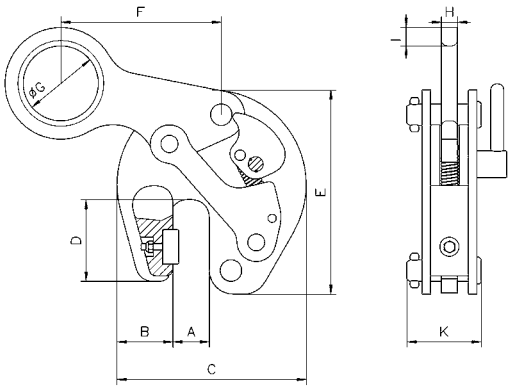

TTT
Girder grab
for horizontal transport

Capacity 750 - 4500 kg

The girder grab TTT is used for the horizontal transport of steel girders. Due to the split fixed jaw, it can be positioned centrally on the end of the beam. The grab should only be used in pairs.

The safety lock with positive spring tension holds the grab in position on the end of the girder even without load tension.

The lever is used to engage and disengage the jaw and to keep it open.

INFO

The angle from the vertical must not exceed 30°!

Technical data TTT

Model	Art.-No.	Capacity kg	Jaw capacity mm	Weight kg
TTT 0,75	N54509121	750	0 - 20	3
TTT 1,5	N54509122	1500	0 - 35	6
TTT 3,0	N54509123	3000	0 - 40	10
TTT 4,5	N54509124	4500	0 - 45	16

Dimensions TTT

Model	TTT 0,75	TTT 1,5	TTT 3,0	TTT 4,5
A, mm	30	38	50	60
B, mm	70	70	75	90
C, mm	100	155	195	222
D, mm	142	150	195	222
Ø E, mm	50	70	80	90
F, mm	16	19	19	22
G, mm	16	20	25	30
H, mm	225	335	400	450
I, mm	45	45	80	90
J, mm	200	210	214	248
K, mm	106	120	125	147
L, mm	52	66	80	88

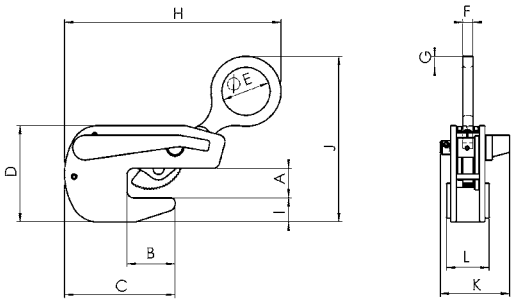

TCG
Girder grab
for transportation and turning of steel girders

Capacity 100 - 2000 kg

The main purpose of the CG girder turning clamps are for the transportation and turning of steel girders through 90°. They can be used individually or for longer beams used in in pairs in conjunction with a spreader beam. The clamps are attached to the horizontal flange of the girder and locked in place by the jaw locking lever. Once lifted the girder will turn through 90°.
These plate clamps are service-friendly, making it easy to exchange parts, which are readily available. Clamp repairs must be done by a trained person.

INFO

For longer girders use two clamps and a lifting beam!

Technical data TCG

Model	Art.-No.	Capacity kg	Jaw capacity mm	Weight kg
TCG 1	N4300000036	100 -1 000	0 - 16	6
TCG 2	N4300000037	200 - 2000	0 - 32	14

Dimensions TCG

Model	TCG 1	TCG 2
A, mm	211	290
B, mm	90	140
C, mm	50	80
D, mm	13	20
E, mm	43	60
F, mm	263	317
G, mm	64	100
H, mm	350	465
I, mm	337	435

Similar images

TCH
Horizontal lifting gear

Capacity 1000 - 20000 kg

The TCH lifting clamp is designed to be used as a pair with a two-legged chain sling.
It is especially suited for the transport of single plates with a minimum thickness of approx. 5 mm as well as for plate bundles. The two-legged version is appropriate for normal sized plates.

For extra large or long plates, it is recommended to use two sets of the two-legged lifting gears in conjunction with a spreader beam. In the standard version, the lifting clamp is suitable for plates up to 1500 mm width. Lifting gears with longer chains for larger plate widths are available on request.

INFO

The angle from the vertical must not exceed 45°!

The capacity applies to a pair of lifting clamps.

Technical data TCH

Model	Art.-No. single clamp	Capacity[1] kg	Jaw capacity mm	Weight[2] kg
TCH 1,0	N50501517	1000	0 - 50	13.0
TCH 2,0	N50501511	2000	5 - 32	17.7
TCH 4,0	N50501512	4000	5 - 50	31.0
TCH 6,0	N50501513	6000	5 - 75	69.0
TCH 8,0	N50501514	8000	5 - 75	72.0
TCH 10,0/1	N50501515	10000	5 - 100	93.8
TCH 10,0/2	N50501516	10000	50 - 150	108.6
TCH 15,0/1	N4300012878	15000	5 - 100	110
TCH 15,0/2	N4300012879	15000	50 - 150	123
TCH 20,0/1	N4300014489	20000	5 - 100	165
TCH 20,0/2	N4300014491	20000	50 - 150	172

[1]Per pair, up to an angle of 45° from the vertical
[2]Approx. weight for 2 single clamps with a chain length = 1 m

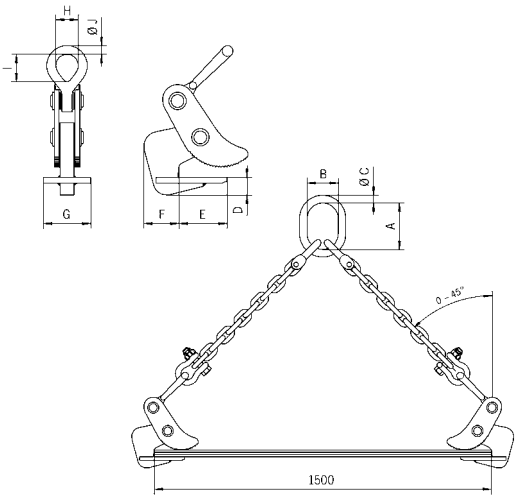

Dimensions TCH

Model	TCH 1,0	TCH 2,0	TCH 4,0	TCH 6,0	TCH 8,0	TCH 10,0/1	TCH 10,0/2	TCH 15,0/1	TCH 15,0/2	TCH 20,0/1	TCH 20,0/2
A, mm	135	160	180	200	260	300	300	-	-	-	-
B, mm	75	90	100	110	140	160	160	-	-	-	-
Ø C, mm	18	22	26	32	36	40	40	-	-	-	-
D, mm	15	32	44	58	56	70	66	71	71	70	70
E, mm	82	83	114	172	170	216	218	230	230	220	220
F, mm	65	61	75	97	100	116	116	120	120	118	118
G, mm	100	100	99	129	128	149	150	150	150	220	220
H, mm	32	49	62	90	90	113	113	144	144	80	80
I, mm	44	72	89	127	130	113	113	144	144	120	120
Ø J, mm	13	19	26	36	37	50	50	50	50	60	60

TGF
Horizontal lifting gear

Capacity 1300 - 10000 kg

The TGF horizontal lifting gear consists of two clamps with a two-legged chain sling and is especially suited for the transport of plate bundles.

The clamps are easily adjusted to the height of the plate by a special ratcheting lever.

The lifting clamps are available in special versions for bundle thicknesses up to 400 mm. The lifting gear is made according to your requirements.

INFO

The angle from the vertical must not exceed 45°!

The capacity applies to a pair of lifting clamps.

Technical data TGF

Model	Art.-No. single clamp	Capacity[1] kg	Jaw capacity Z mm	Weight[2] kg
TGF 1,3/150	N50601617	1300	0 - 150	23
TGF 3,3/150	N50601619	3300	0 - 150	39
TGF 6,6/150	N50601621	6650	0 - 150	65
TGF 1,3/250	N50601624	1300	0 - 250	23
TGF 3,3/250	N50601626	3300	0 - 250	39
TGF 6,6/250	N50601628	6650	0 - 250	87
TGF 10,0/300	192065646	10000	0 - 300	92

[1]Per pair, up to an angle of 45° from the vertical
[2]Approx. weight for 2 single clamps with a chain length = 1 m

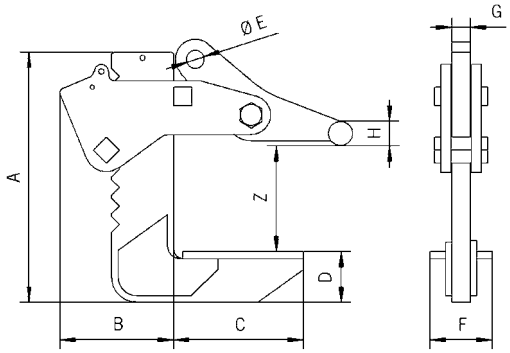

Dimensions TGF

Model	TGF 1,3/150	TGF 3,3/150	TGF 6,6/150	TGF 1,3/250	TGF 3,3/250	TGF 6,6/250	TGF 10,0/300
A, mm	298	321	405	448	417	495	495
B, mm	122	130	185	122	130	185	210
C, mm	160	160	210	140	160	210	240
D, mm	41	50	82	41	60	82	100
Ø E, mm	20	23	30	20	23	30	40
F, mm	80	80	100	80	80	100	120
G, mm	20	25	30	20	25	30	50
Ø H, mm	25	25	40	25	25	40	40

BVH
Horizontal lifting hook

Capacity 500 - 7500 kg

The BVH horizontal lifting hooks are used in pairs with chain or wire rope slings to lift plate bundles that are relatively close to the ground.

The high tensile hooks have a serrated lifting surface.

INFO

The angle from the vertical must be 30 - 45°!

The chain has to be in line with the crank of the lifting hooks.

Technical data BVH

Model	Art.-No.	Capacity[1] kg	Weight kg
BVH 0,5	N50500001	500	1.2
BVH 1,12	N50500002	1120	1.4
BVH 1,5	N50500003	1500	2.4
BVH 2,0	N50500004	2000	3.9
BVH 2,5	N50500005	2500	8.2
BVH 3,2	N50500006	3200	8.3
BVH 4,0	N50500007	4000	13.6
BVH 5,3	N50500008	5300	21.0
BVH 6,0	N50500009	6000	39.0
BVH 7,5	N50500010	7500	60.0

[1]Per unit

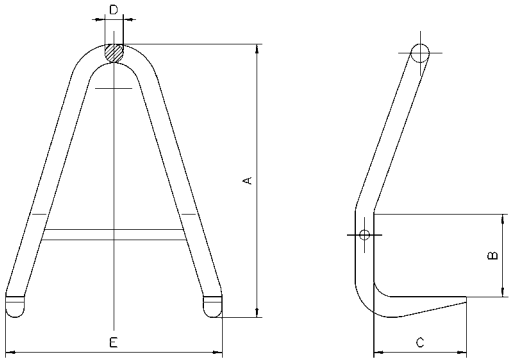

Dimensions BVH

Model	BVH 0,5	BVH 1,12	BVH 1,5	BVH 2,0	BVH 2,5	BVH 3,2	BVH 4,0	BVH 5,3	BVH 6,0	BVH 7,5
A, mm	180	210	240	280	340	400	530	660	800	980
B, mm	50	60	70	80	100	120	160	200	250	300
C, mm	80	95	105	115	120	140	180	210	250	300
D, mm	18	20	22	26	32	32	36	40	50	60
E, mm	150	170	200	220	270	320	420	520	640	760

THS
Lifting clamp with safety lock

Capacity 750 - 4500 kg

The THS lifting clamp is normally used in pairs especially for the horizontal transport of plates. The transport of slightly sagging plates is also possible. Individually, it can be used to load presses shears, and other machines. The safety lock is preventing the clamp from opening, even when there is no load. The jaws can be opened and closed with the safety lock lever. This clamp has a lock-open feature.

Optional

- THS 1,5 and THS 3,0 are available with a hinged hook ring on request

INFO

When used in pairs the angle from the vertical must not exceed 30°.

Technical data THS

Model	Art.-No.	Capacity[1] kg	Jaw capacity mm	Weight kg
THS 0,75	N50801851	750	0 - 20	3.2
THS 1,5	N50801852	1500	0 - 35	6.1
THS 3,0	N50801853	3000	0 - 40	12.7
THS 4,5	N50801854	4500	0 - 40	16.5

[1]Per unit

Dimensions THS

Model	THS 0,75	THS 1,5	THS 3,0	THS 4,5
A, mm	30	38	45	47
B, mm	70	80	95	110
C, mm	130	165	205	235
D, mm	97	120	160	196
Ø E, mm	50	70	80	90
F, mm	12	15	20	20
G, mm	15	17	25	30
H, mm	255	335	400	450
I, mm	15	20	30	59
J, mm	135	165	195	230
K, mm	80	90	100	110
L, mm	40	50	60	64

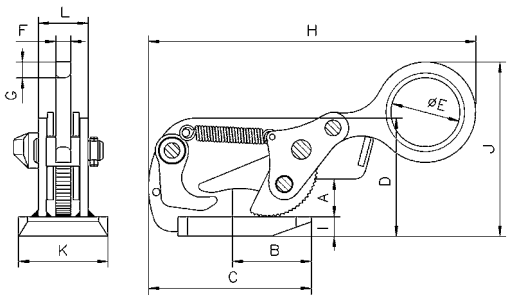

TWH
Lifting clamp

Capacity 1500 - 5000 kg

The TWH lifting clamp, when used in pairs, is well-suited for horizontal transport of individual and bundled plates. The clamp is not suited for thin plates that have a tendency to sag during transport.

It is normally used in combination with a two-legged chain sling.

The capacity (WLL) applies to a pair of lifting clamps.

Optional

- Protective lining

INFO

The angle from the vertical must not exceed 45°.

Technical data TWH

Model	Art.-No.	Capacity[1] kg	Jaw capacity mm	Weight[2] kg
TWH 30 with roller	N54509101	1500	5 - 60	5.6
TWH 50 with roller	N54509102	2500	10 - 70	10.3
TWH 70 with roller	N54509103	3500	10 - 80	13.4
TWH 100 with roller	N54509104	5000	10 - 102	27.7
TWH 30 with plate	N54509105	1500	5 - 60	5.7
TWH 70 with plate	N54509107	3500	10 - 80	13.5

[1]Per pair, angle from the vertical max. 45° [2]Per unit

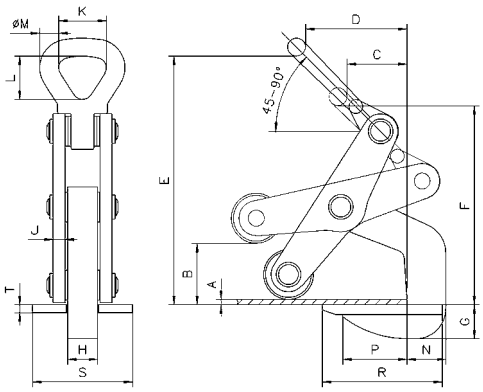

TWH with roller

Dimensions TWH

Model	TWH 30 mit Rolle	TWH 50 mit Rolle	TWH 70 mit Rolle	TWH 100 mit Rolle	TWH 30 mit Platte	TWH 70 mit Platte
A, mm	5	10	10	10	5	10
B, mm	60	70	80	102	60	80
C, mm	60	75	90	110	60	90
D, mm	105	130	162	170	105	162
E, mm	250	315	345	425	250	345
F, mm	200	275	292	345	200	292
G, mm	31	45	55	57	22	48
H, mm	30	30	30	45	30	30
J, mm	12	12	15	20	12	15
K, mm	50	64	64	89	50	64
L, mm	73	92	92	130	73	92
Ø M, mm	18	25	25	35	18	25
N, mm	36	58	65	80	36	65
P, mm	65	77	105	120	65	105
R, mm	120	150	185	210	120	185
S, mm	100	100	100	120	100	100
T, mm	10	10	10	12	10	10

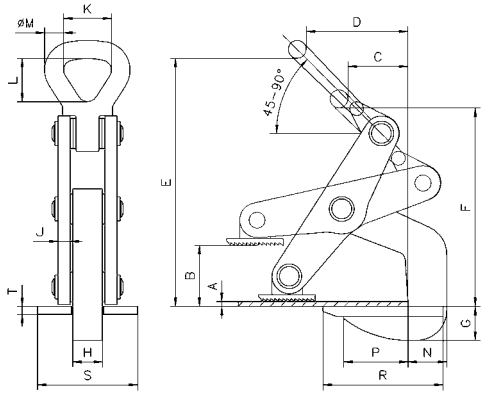

TWH with plate

THK
Lifting clamp

Capacity 750 - 9000 kg

The THK lifting clamp, when used in pairs, is especially well-suited for horizontal transport of thin plates that have a tendency to sag.

It is normally used in combination with a two-legged chain sling.

The capacity applies to a pair of lifting clamps.

INFO

The angle from the vertical must not exceed 30°!

Technical data THK

Model	Art.-No.	Capacity[1] kg	Jaw capacity mm	Weight[2] kg
THK 0,75	N50701751	750	0 - 25	1.7
THK 1,5	N50701752	1500	0 - 35	3.2
THK 3,0	N50701753	3000	0 - 35	5.7
THK 4,5	N50701754	4500	0 - 45	8.4
THK 6,0	N50701755	6000	0 - 60	11.6
THK 9,0	N50701756	9000	0 - 60	17.9

[1]Per pair, angle from the vertical max. 30°
[2]Per unit

Dimensions THK

Model	THK 0,75	THK 1,5	THK 3,0	THK 4,5	THK 6,0	THK 9,0
A, mm	25	36	38	48	63	65
B, mm	72	80	93	103	124	113
C, mm	118	135	168	183	214	223
D, mm	81	102	119	140	176	188
Ø E, mm	20	25	30	30	35	40
F, mm	161	198	227	238	284	317
G, mm	12	15	20	25	30	35
H, mm	86	102	110	122	110	148
I, mm	12	15	20	20	20	20

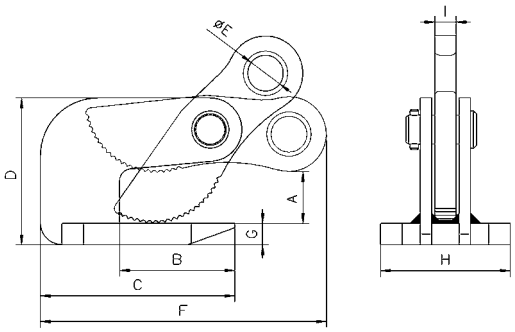

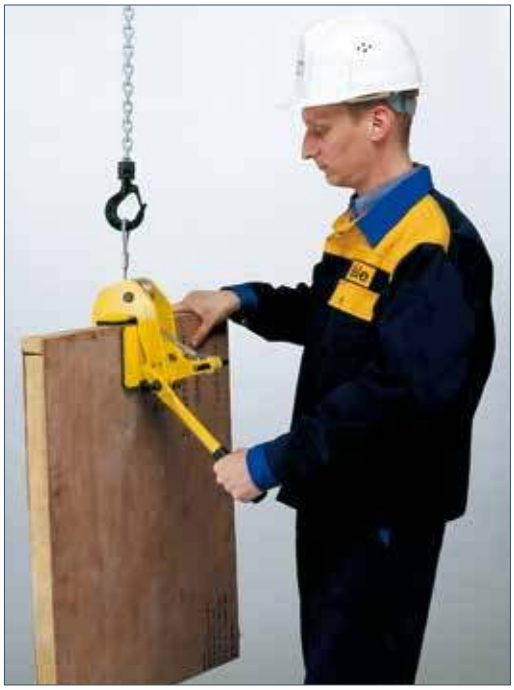

TPZ
Board clamp

Capacity 400 - 750 kg

The TPZ clamp is made for lifting and vertically transporting wood, particle board and plastic sheets.

The pliers are fastened to the plate with the aid of a hand-held lever. The jaw, which has a protective lining, grabs once lifting begins and holds the board securely.

Technical data TPZ

Model	Art.-No.	Capacity kg	Jaw capacity Z mm	Weight kg
TPZ 0,4/50	N56200001	400	5 - 50	6.3
TPZ 0,4/100	N56200002	400	50 - 100	9.0
TPZ 0,75/60	N56200003	750	5 - 60	12.0
TPZ 0,75/120	N56200004	750	60 - 120	14.0

Dimensions TPZ

Model	TPZ 0,4/50	TPZ 0,4/100	TPZ 0,75/60	TPZ 0,75/120
A, mm	120	120	155	155
B, mm	290	335	349	406
C, mm	525	525	545	560
D, mm	125	125	145	145
E, mm	117	117	135	135
F, mm	60	60	121	121
G, mm	40	40	75	75
H, mm	6	6	8 x 24	8 x 24

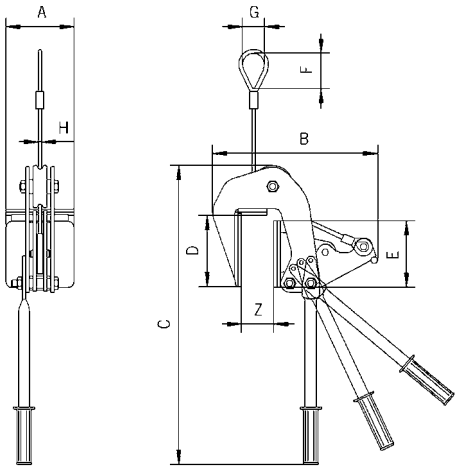

TPZ, up to 400 kg equipped with rope,
from 750 kg equipped with chain.

THM
Manual claw, magnetic

Capacity 120 - 170 kg

The THM manual magnetic claw is used for transporting steel sheets horizontally and vertically, lifting plates from racks, pulling steel sheets out of shelving, as well as transporting flat pieces of magnetizable steel.
The clamp, depending on the type, can be used for plate thicknesses from 1 to 5 mm.

Pressing down on the handle activates a cam which releases the magnetic claw from the workpiece.

This manual claw is maintenance-free and keeps the magnetic force for an unlimited period of time.

Technical data THM

Model	Art.-No.	Capacity[1] kg	Pulling capacity[1] kg	Weight kg
THM 120	N51602501	120	70	2
THM 170	N51602502	170	100	2

[1]Measured at a safety factor 2:1 on bright drawn material St37 k

Dimensions THM

Model	THM 120	THM 170
A, mm	116	116
B, mm	140	140
C, mm	130	130
D, mm	25	25
E, mm	172	172

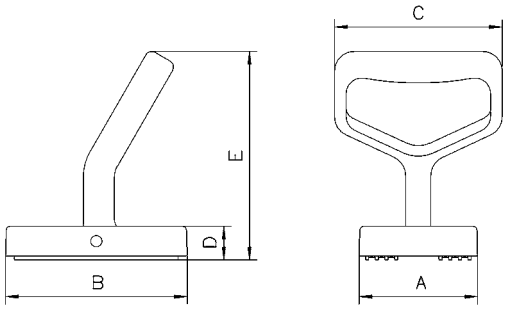

INFO

In order to achieve a maximum capacity, the contact surface should be bright and free from dirt, oil, grease, scale, corrosion, paint etc.

THG
Hand clamp

Capacity 250 kg

The THG hand clamp is suited for the individual transport of light and thin plates. Pressing down on the hand grip releases the tension spring, allowing the clamp to open and slide onto the plate.

The plate can be transported by holding onto the ergonomically designed hand grip.

The positive spring pressure prevents the plate from accidental slipping out of the clamp.

INFO

The plate surface of the material must not exceed a hardness of HRC 30.

Technical data THG

Model	Art.-No.	Capacity kg	Jaw capacity mm	Weight kg
THG	N51502415	250	0 - 10	1.4
THG EX[1]	N4300013269	250	0 - 10	1.5
THG EB[2]	N4300007661	250	0 - 10	1.4

[1]EX = Extended handle (L= 300 mm) [2]EB = Eye bolt (instead of handle)

Dimensions THG

Model	THG	THG EX	THG EB
A, mm	184	280	610
B, mm	105	105	105
C, mm	12	12	12
D, mm	53	53	53
Thickness, mm	40	40	40

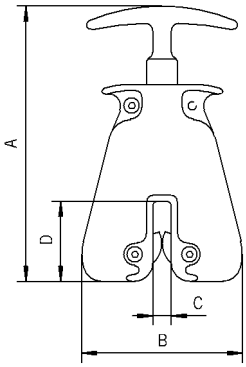

Attaching

Transport

TSH
Screw clamp for vertical and horizontal pulling

Capacity 750 - 5000 kg

The screw clamp offers many possible applications. It is particularly useful for lifting, turning and pulling steel plates, girders and steel constructions.

The spindle is closed only finger tight.

Once the screw clamp is tightened and lifting begins, the pivoting pad clamping system produces a wedging action against the material, holding it securely (see below functional drawing).

Technical data TSH

Model	Art.-No.	Capacity kg	Jaw capacity Z mm	Weight kg
TSH 0,75	N51502400	750	0 - 28	3.1
TSH 1,5	N51502401	1500	0 - 32	7.4
TSH 2,0	N51502422	2000	90 - 140	14.8
TSH 2,0 S	N51502428	2000	50 - 100	14.5
TSH 3,0	N51502402	3000	0 - 50	11.4
TSH 5,0	N51502403	5000	0 - 80	27.6

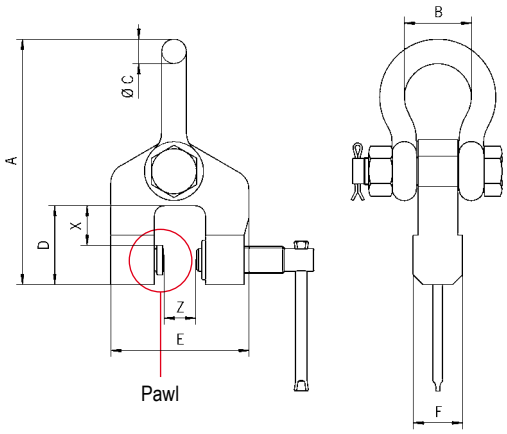

Dimensions TSH

Model	TSH 0,75	TSH 1,5	TSH 2,0	TSH 2,0 S	TSH 3,0	TSH 5,0
A, mm	190	255	318	318	290	470
B, mm	52	65	74	74	74	130
Ø C, mm	19	26	30	30	30	50
D, mm	43	75	90	90	85	135
E, mm	113	130	286	246	170	225
F, mm	35	44	60	60	50	72
X, mm	15	40	38	38	40	50

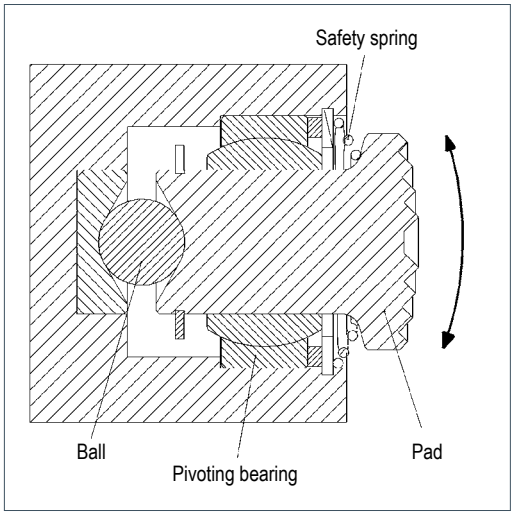

Functional drawing pivoting pad

INFO

The plate surface of the material must not exceed a hardness level of HRC 50.

TSZ
Screw clamp
for three-dimensional pulling

Capacity 500 - 7500 kg

The TSZ screw clamp is designed to pull in three directions. It offers many different possibilities for transporting steel constructions, feeding machining centres, etc.

The spindle is closed only finger tight.

When the screw clamp is tightened and lifting begins, the pivoting pad clamping system produces a wedging action against the material, holding it securely (see below functional drawing).

INFO

The plate surface of the material must not exceed a hardness level of HRC 50.

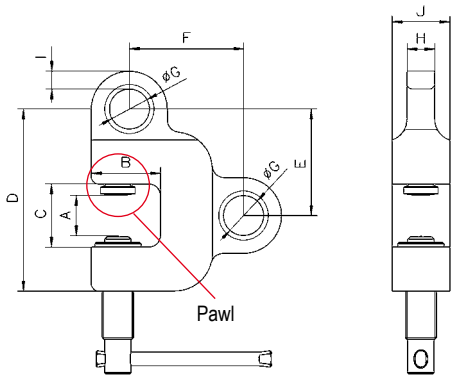

Technical data TSZ

Model	Art.-No.	Capacity kg	Jaw capacity mm	Weight kg
TSZ 0,5	N51502410	500	0 - 28	2.3
TSZ 1,5	N51502411	1500	0 - 35	5.6
TSZ 3,0	N51502412	3000	0 - 35	8.8
TSZ 5,0	N51502413	5000	0 - 40	16.2
TSZ 7,5	N51502414	7500	0 - 40	20.9

Dimensions TSZ

Model	TSZ 0,5	TSZ 1,5	TSZ 3,0	TSZ 5,0	TSZ 7,5
A, mm	28	35	35	40	40
B, mm	43	60	67	85	92
C, mm	45	55	65	75	75
D, mm	125	158	195	230	240
E, mm	72	93	114	133	143
F, mm	83	99	120	150	162
Ø G, mm	26	35	46	55	65
H, mm	16	24	34	40	50
I, mm	12	16	17	18	23
J, mm	35	50	60	75	80

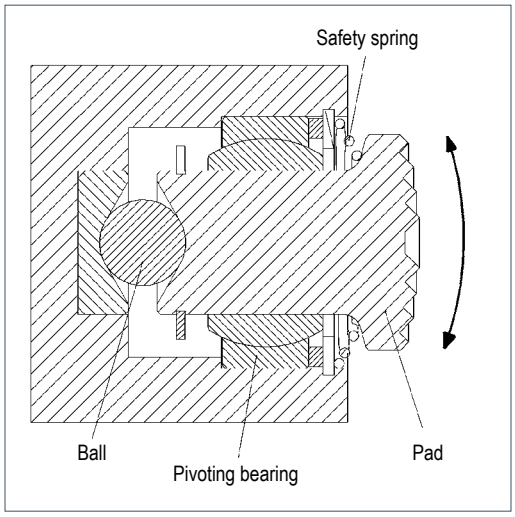

Functional drawing pivoting pad

TRU
Roundstock grab

Capacity 100 - 4000 kg

The TRU roundstock grab picks up roundstock and pipe material up to 600 mm in diameter quickly and safely. With its optional protective lining, it can also pick up materials with sensitive surfaces.

INFO

When using protective lining, it is important that the surfaces are dry, clean and free of oil and grease.

Technical data TRU

Model	Art.-No.	Art.-No. with protective lining	Capacity kg	Jaw capacity Z mm	Weight kg
TRU 0,1/150	N51902711	N51902712	100	50 - 150	4.2
TRU 0,5/200	N51902701	N51902706	500	35 - 200	13.6
TRU 1,0/200	N51902702	N51902707	1000	35 - 200	13.6
TRU 1,5/300	N51902703	N51902708	1500	80 - 300	27.0
TRU 3,0/300	N51902704	N51902709	3000	80 - 300	49.0
TRU 4,0/600	N51902705	N51902710	4000	200 - 600	204.0

Dimensions TRU

Model	TRU 0,1/150	TRU 0,5/200	TRU 1,0/200	TRU 1,5/300	TRU 3,0/300	TRU 4,0/600
A, mm	270	503	509	720	740	1420
B min., mm	292	417	437	520	582	930
B max., mm	458	723	745	937	960	1815
C, mm	97	150	178	204	220	318
D, mm	43	56	82	84	125	205
E, mm	8	15	15	20	20	30
F, mm	17	17	30	25	30	35

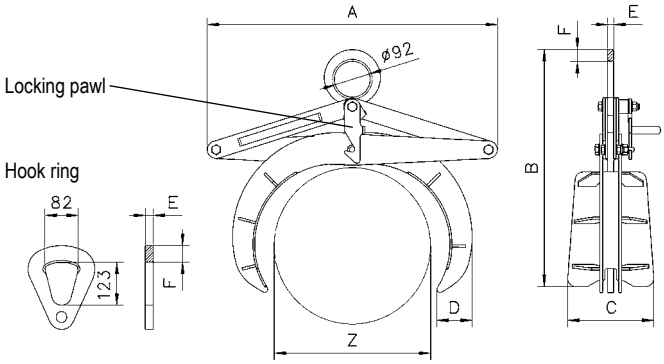

TRU, hook ring for grabs for 2000 kg and above.
Locking pawl keeps the grab in the open position.

TPR
Profile steel grab

Capacity 500 - 3000 kg

The TPR steel grab is designed for transport of girders, profile steel, etc. It boasts a large jaw capacity, which makes it useful for various flange widths.

The clamping jaws press securely with a positive fit to the girder.

Technical data TPR

Model	Art.-No.	Capacity kg	Jaw capacity Z mm	Weight kg
TPR 0,5/200	N51802601	500	0 - 200	15.0
TPR 1,5/300	N51802602	1500	0 - 300	22.6
TPR 3,0/300	N51802603	3000	0 - 300	41.7

Dimensions TPR

Model	TPR 0,5/200	TPR 1,5/300	TPR 3,0/300
A, mm	510	710	720
B min., mm	390	495	525
B max., mm	625	830	920
C, mm	200	200	220
D, mm	15	15	20
E, mm	30	30	43

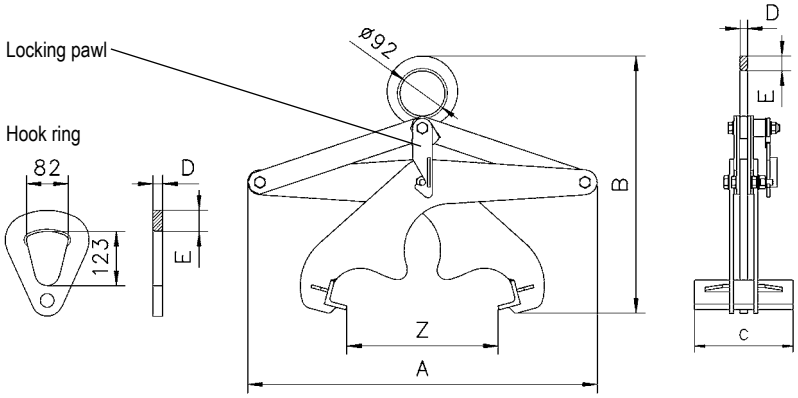

Hook ring for grabs for 2000 kg and above.
Locking pawl keeps the grab in the open position.

TVB
Block grab

Capacity 250 and 500 kg

The TVB block grab is useful for the transport of stone and concrete blocks and other materials with parallel surfaces. The grab has a protective lining to ensure a safe and non-marring transport.

The clamping jaw and the center of gravity are easily and quickly adjustable by means of the locking pin.

INFO

It is important that the surfaces are dry, clean and free of oil and grease.

Technical data TVB

Model	Art.-No.	Capacity kg	Jaw capacity Z mm	Weight kg
TVB 500	N52625000	250/500	0 - 240	13

Dimensions TVB

Model	TVB 500
A, mm	537
B, mm	296
C, mm	112
D, mm	80
E, mm	75
F, mm	85
Ø G, mm	22
Ø H, mm	10

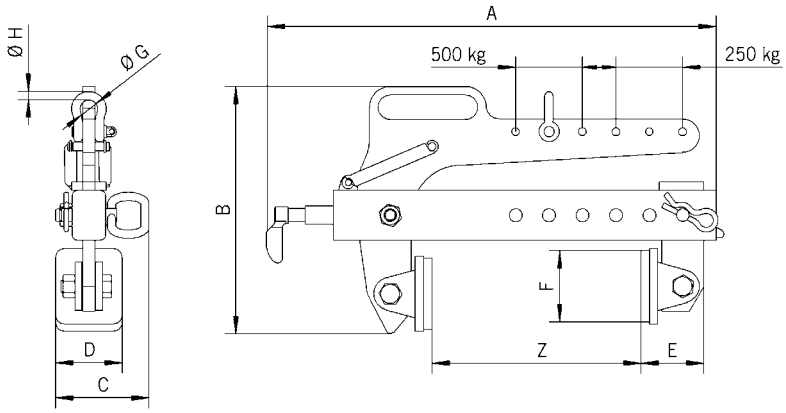

Concrete grab with small jaw capacity

Concrete grab with large jaw capacity

TBG
Concrete grab

Capacity 500 - 1000 kg

The TBG block grabs are suited for the transport of all materials with parallel surfaces that can withstand a clamping pressure twice as high as the load being lifted.

The grabs are delivered with a replaceable hard rubber protective lining as standard.

Technical data TBG with small and large jaw capacity

Model	Art.-No.	Capacity kg	Jaw capacity Z mm	Weight kg
TBG 0,5/150	N52604009	500	0 - 150	27
TBG 1,0/250	N52604010	1000	50 - 250	50
TBG 0,2/500	N52604156	200	200 - 500	49
TBG 0,3/700	N52604157	300	400 - 700	52
TBG 0,5/900	N52604158	500	600 - 900	55
TBG 1,0/400	N52704251	1000	100 - 400	51
TBG 1,0/1100	N52604159	1000	800 - 1100	72

INFO

When using rubber protective lining it is important that the surfaces are dry, clean and free of oil and grease.

Dimensions TBG with small and large jaw capacity

Model	TBG 0,5/150	TBG 1,0/250	TBG 0,2/500	TBG 0,3/700	TBG 0,5/900	TBG 1,0/400	TBG 1,0/1100
A[1], mm	815	1.050	1.040	1.040	1.120	1.040	1.320
B min., mm	420	460	390	390	390	390	390
B max., mm	760	980	840	840	840	840	840
C, mm	200	250	275	275	275	250	275
D, mm	160	160	160	160	160	160	160
E, mm	30	29	300	300	300	300	300
F, mm	15	20	35	35	35	35	35
G, mm	–	–	20	20	20	20	20

[1]Scissor dimensions

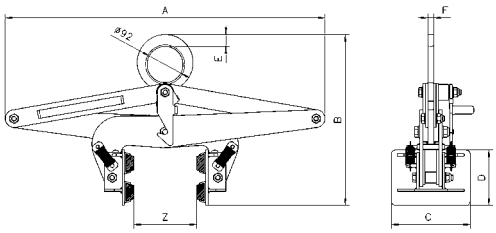

TBG with small jaw capacity

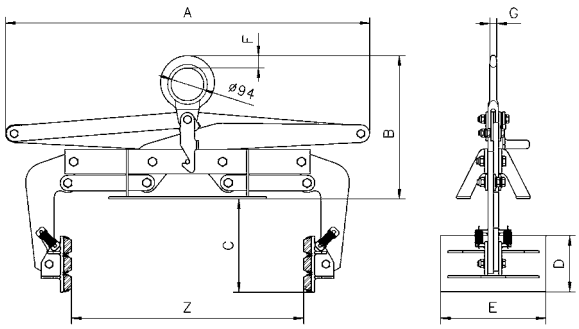

TBG with large jaw capacity

TBA
Bale grab

Capacity 200 - 1000 kg

The TBA bale grab transports bales of fiber, wool, fabric, paper, pressed straw and various types of shavings up to a width of 1.3 m. Bales are gripped safely yet gently, and where applicable, the clamps are lined with a soft and pliable material.

The locking pawl only engages if the grab is opened without manual intervention.

INFO

The standard grab is equipped with protective linings.

Serrated jaws available on request.

Technical data TBA

Model	Art.-No. with protective lining	Capacity kg	Jaw capacity Z mm	Weight kg
TBA 0,2/700	N52804501	200	250 - 700	40
TBA 0,3/900	N52804502	300	450 - 900	42
TBA 0,5/1100	N52804503	500	650 - 1100	45
TBA 0,75/1300	N52804504	750	850 - 1300	62
TBA 1,0/1300	N52804505	1.000	850 - 1.300	62

Dimensions TBA

Model	TBA 0,2/700	TBA 0,3/900	TBA 0,5/1100	TBA 0,75/1300	TBA 1,0/1300
A, mm	890	1090	1290	1550	1550
B, mm	420	420	420	420	420
C, mm	500	500	500	500	500
D, mm	35	35	35	35	35
E, mm	20	20	20	20	20

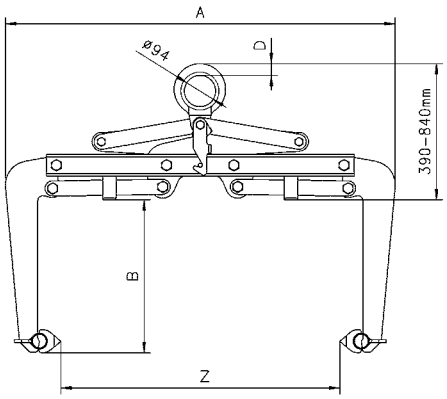

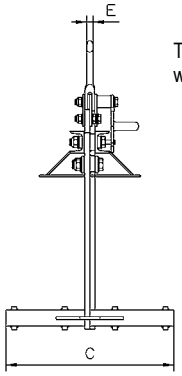

TBA 0,2-1 t
with serrated jaw

TCU

TCO

Container lifting lug TCO

TCU and TCO Container lifting lugs

Capacity 32000 - 56000 kg

The lugs serve as flexible attachment points for the transport of containers. Two types are available which can be fastened to either the “top” or to the “bottom” of the container.
These container lifting lugs are offered in a set of 4 pieces.

TCO

TCO is vertically mounted in the hole at the top of the container. Turning the TCO 90°, locks it securely in place.

Transport is done with the use of a spreader beam in conjunction with wire rope, chain or textile slings making sure the load is suspended vertically.

TCU

TCU is laterlay mounted at the bottom fixing hole on the container and has a spring-loaded bolt to prevent an accidental release.

Technical data TCO and TCU

Model	Art.-No.	Capacity [1] kg	Weight [1] kg	Sling angle from vertical
TCU 32	N53508014	32000	19.5	50°
TCU 40	N53508014	40000	19.5	36°
TCO 56	N53508016	56000	30.1	vertical

[1]set of 4 pieces

Dimensions TCO and TCU

Model	TCU 32	TCU 40	TCO 56
A, mm	152	152	123
B, mm	181	181	217
Ø C, mm	45	45	45
D, mm	37	37	39
E, mm	73	73	57
F, mm	75	75	101
G, mm	40	40	121
I, mm	51	51	–

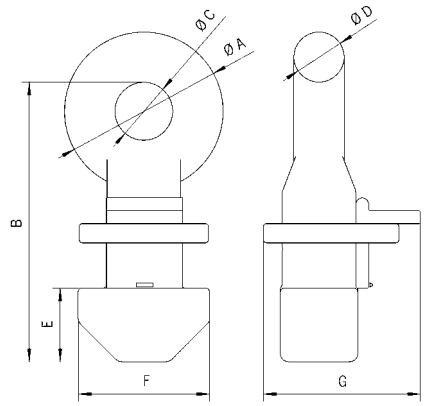

TCO

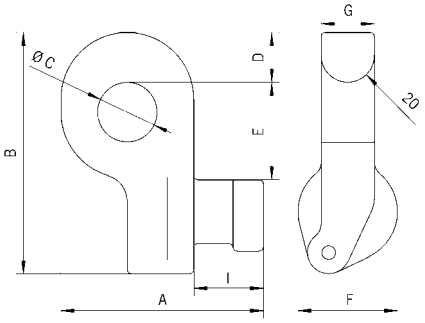

TCU

TKB
Clamps for cable drums

Capacity 5000 kg

Specifically designed for the transport of cable drums, these clamps are used in pairs together with a two-legged chain sling.

By the spreading of the clamp, it locks inside the drum.

The clamps can be held in place by a locking lever.

Easy handling, light-weight design, and the size of the clamp contribute to a safe transport of all types of cable drums.

INFO

Various sizes are available on request. Please supply dimensions C and D!

Technical data TKB

Model	Art.-No.	Capacity [1] kg	Weight kg
TKB	N52210000	5000	11

[1] Per pair

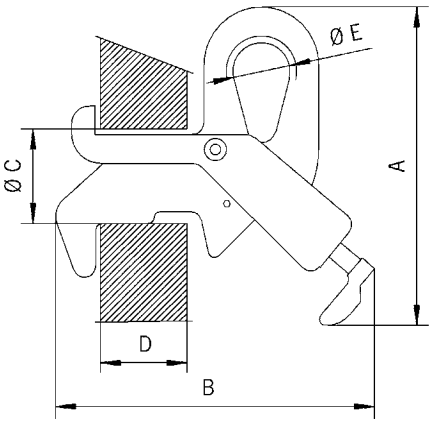

Dimensions TKB

Model	TKB
A, mm	277
B, mm	277
Ø C, mm	82
D, mm	85
Ø E, mm	50

TCR
Rail grab with safety lock

Capacity 1000 - 2000 kg

The TCR rail grab transports rails, as used by railways, easily and safely. A safe grip is ensured by the lever operated safety lock. For long rails, two grabs must be attached to a spreader beam to avoid sagging.

Since the rails are primarily grabbed with positive fit, it is important that the clamp stays in a vertical position during initial lift.

Technical data TCR

Model	Art.-No.	Capacity kg	Weight kg
TCR 1,0	N51402351	1000	12.4
TCR 2,0	N51402352	2000	13.9

Dimensions TCR

Model	TCR 1,0	TCR 2,0
A[1], mm	144	144
B, mm	152	163
C, mm	350	350
D, mm	90	90
E, mm	46	46
Ø F, mm	20	20
G, mm	25	25

[1] Scissor dimensions

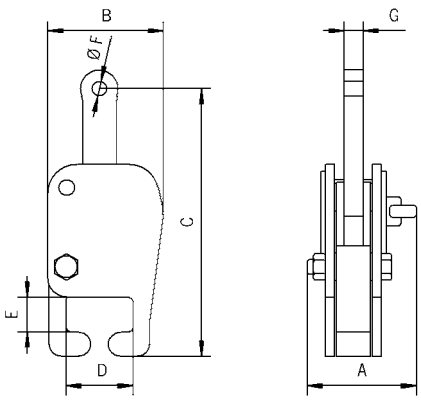

INFO

For special sizes please advise rail type and profile!

A TCR multiple rail system is also available for the simultaneous transport of up to 12 rails.

For rail jacks please see page 138.

MR
Multi-rail grab

Capacity 5000 - 12000 kg

The multiple rail grab with fixed adapter for one rail type is used wherever rails are loaded using a crane and lifting gear, e.g. in ports, steelworks, on the road and in storage yards.
They are used in pairs.

Technical data MR

Model	Art.-No.	Capacity kg	Number of rails	Weight kg
MR 3	–	5000	3	84
MR 4	–	5000	4	108
MR 5	–	5000	5	132
MR 6	–	6000	6	156
MR 7	–	7000	7	180
MR 8	–	8000	8	204
MR 10	–	10000	10	252
MR 12	–	12000	12	300

MRC
Multi-rail grab

Capacity 5000 - 7000 kg

The multiple rail grab with interchangeable adapter for different rail types is used wherever rails are loaded by crane and lifting gear, e.g. in ports, steelworks, on the road and in storage yards.
They are used in pairs.

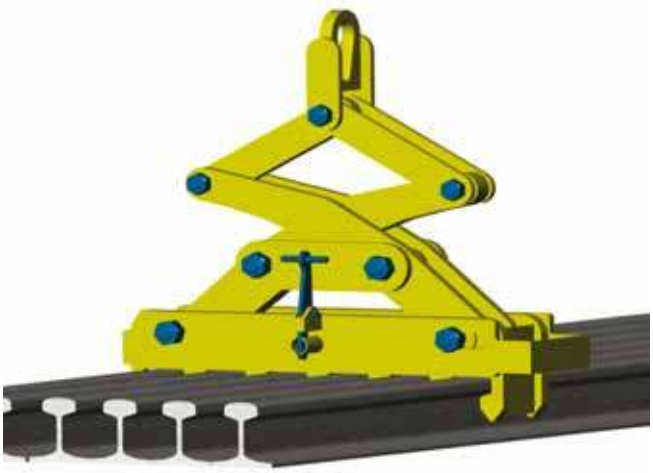

Technical data MRC

Model	Art.-No.	Capacity kg	Number of rails	Weight kg
MRC 4	–	5000	3	84
MRC 5	–	5000	4	108
MRC 6	–	5000	5	132
MRC 7	–	6000	6	156
MRC 8	–	7000	7	180

The picture shows the standard version with tines 3/4 length of the coil

TCK
C-hooks

Capacity 500 - 10000 kg

Coils, rolls, rings and similar items are transported safely with the Tigrip C-hooks.

Tine length and usable height with the most frequently encountered coil sizes are listed in the table below.

Other working loads, measurements, and models, such as C-hooks with automatic balancing device, are available on request.

Technical data TCK

Model	Art.-No.	Capacity kg	Weight kg
TCK 0,5/300	N53507801	500	21
TCK 0,5/500	N53507802	500	30
TCK 0,5/800	N53507803	500	46
TCK 1,0/300	N53507804	1000	28
TCK 1,0/500	N53507805	1000	40
TCK 1,0/800	N53507806	1000	95
TCK 2,0/300	N53507807	2000	45
TCK 2,0/500	N53507808	2000	90
TCK 2,0/800	N53507809	2000	140
TCK 2,0/1000	N53507810	2000	180
TCK 3,0/300	N53507811	3000	68
TCK 3,0/500	N53507812	3000	127
TCK 3,0/800	N53507813	3000	165
TCK 3,0/1000	N53507814	3000	215
TCK 5,0/500	N53507815	5000	184
TCK 5,0/800	N53507816	5000	238
TCK 5,0/1000	N53507817	5000	286
TCK 5,0/1250	N53507818	5000	364
TCK 7,5/800	N53507819	7500	390
TCK 7,5/1000	N53507820	7500	520
TCK 7,5/1250	N53507821	7500	650
TCK 7,5/1500	N53507822	7500	767
TCK 10,0/1000	N53507823	10000	772
TCK 10,0/1250	N53507824	10000	810
TCK 10,0/1500	N53507825	10000	980

Dimensions TCK

Model	TCK 0,5/300	TCK 0,5/500	TCK 0,5/800	TCK 1,0/300	TCK 1,0/500	TCK 1,0/800	TCK 2,0/300	TCK 2,0/500	TCK 2,0/800	TCK 2,0/1000
Coil width A, mm	300	500	800	300	500	800	300	500	800	1000
Usable height B, mm	400	400	400	450	450	450	500	500	500	500
C, mm	570	580	580	620	630	630	700	700	720	720
D, mm	60	60	60	60	60	60	75	75	75	75
E, mm	120	120	120	120	120	120	150	150	150	150
F, mm	20	20	25	25	20	30	25	30	30	20
G, mm	25	23	23	23	23	23	38	38	38	35
H, mm	20	20	25	20	25	30	25	30	30	40
I, mm	50	65	70	70	80	90	90	110	125	125

Model	TCK 3,0/300	TCK 3,0/500	TCK 3,0/800	TCK 3,0/1000	TCK 5,0/500	TCK 5,0/800	TCK 5,0/1000	TCK 5,0/1250	TCK 7,5/800	TCK 7,5/1000
Coil width A, mm	300	500	800	1000	500	800	1000	1250	800	1000
Usable height B, mm	500	500	500	500	550	550	550	550	600	600
C, mm	700	700	720	720	800	800	820	820	900	900
D, mm	75	75	75	75	100	100	100	100	110	110
E, mm	150	150	150	150	200	200	200	200	220	220
F, mm	30	20	25	20	25	30	30	30	35	35
G, mm	38	40	40	40	45	45	45	45	50	50
H, mm	30	30	40	40	40	50	50	50	50	60
I, mm	105	125	140	155	145	160	180	200	200	200

Model	TCK 7,5/1250	TCK 7,5/1500	TCK 10,0/1000	TCK 10,0/1250	TCK 10,0/1500
Coil width A, mm	1250	1500	1000	1250	1500
Usable height B, mm	600	600	650	650	650
C, mm	900	920	980	1000	1000
D, mm	110	110	130	130	130
E, mm	220	220	250	250	250
F, mm	35	35	40	45	45
G, mm	45	50	50	55	55
H, mm	60	70	70	70	80
I, mm	220	220	220	240	240

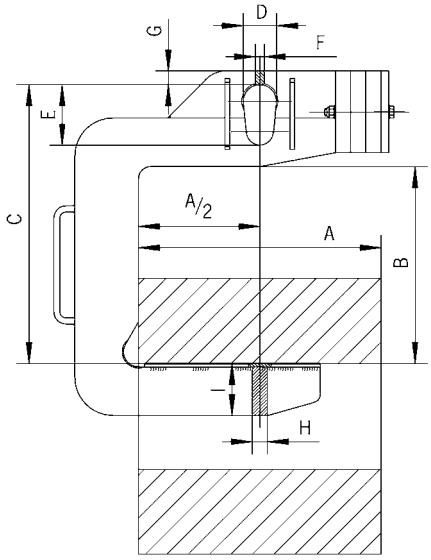

TCK specials

with 4/4 length of tines and safety nose
on request

TCS
Coil hook

Capacity 500 - 3000 kg

The TCS coil hook is an universal C-Hook. Due to its tipping feature, it can lift or lower the coil, whether the coil is lying flat or is in an upright position. With this tipping device, the coil is tipped safely through 90°.

The slow and safe movement of the tipping device ensures a continuous flowing movement when lifting or lowering the coil. At the same time, the tipping device serves the purpose of preventing accidental slipping of the load during transport.

INFO

Other sizes and models available on request.

Technical data TCS

Model	Art.-No.	Capacity kg	Weight kg
TCS 0,5/120	N53507850	500	6.9
TCS 0,5/200	N53507851	500	9.6
TCS 1,0/200	N53507852	1000	15.4
TCS 1,0/300	N53507853	1000	20.0
TCS 2,0/200	N53507854	2000	24.8
TCS 2,0/300	N53507855	2000	33.4
TCS 3,0/200	N53507856	3000	45.0
TCS 3,0/300	N53507857	3000	51.0

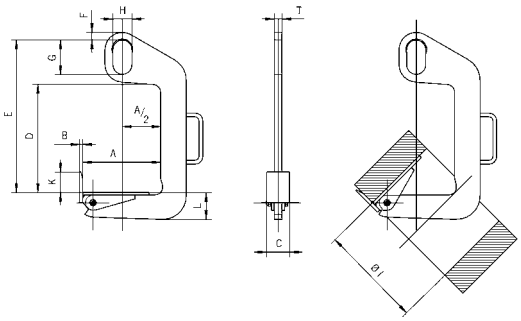

Dimensions TCS

Model	TCS 0,5/120	TCS 0,5/200	TCS 1,0/200	TCS 1,0/300	TCS 2,0/200	TCS 2,0/300	TCS 3,0/200	TCS 3,0/300
Coil width A min, mm	50	100	100	200	100	200	100	200
Coil width A max., mm	120	200	200	300	200	300	200	300
B, mm	10	10	10	10	12	12	15	15
C, mm	60	60	80	80	90	90	100	100
D, mm	330	330	460	460	420	420	610	610
E, mm	470	470	600	600	600	600	820	820
F, mm	20	20	20	20	30	30	40	40
G, mm	110	110	110	110	135	135	160	160
H, mm	60	60	60	60	75	75	90	90
K, mm	50	50	60	60	80	80	100	100
L, mm	45	50	65	70	85	95	100	110
T, mm	20	20	25	25	30	30	35	35
Ø l , mm	220	300	300	400	300	400	300	400

CMCO
Last verboten

TFA D
Barrel grab with tipping device

Capacity 300 kg

The grab with tipping device is suited to lift, transport as well as tipping and emptying the barrel.

In order to tip the barrel easily, it must be picked up at the correct center of gravity.

INFO

For barrels according to EN ISO 15750-2.

Technical data TFA D

Model	Art.-No.	Capacity kg	Jaw capacity Z diameter mm	Weight kg
TFA 0,3/600 D	N52203404	300	400 - 600	83

Dimensions TFA D

Model	TFA 0,3/600 D
A, mm	600
B, mm	1150
C, mm	1525
Ø D, mm	90
E, mm	34
F, mm	15
G, mm	200
H, mm	400

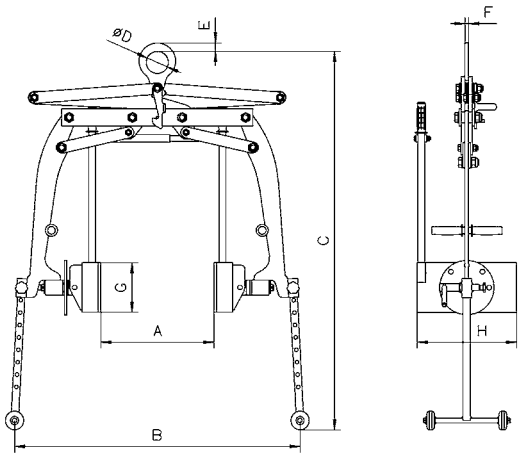

TFA 0,35/700 R and TFA 0,35/700 TR Barrel grab

Capacity 350 kg

These barrel grabs are designed for transport of steel barrels. The clamping jaws press securely with a positive fit underneath the rim of the barrel.

TFA-R

TFA-TR

INFO

TFA 0,35/700 TR is a combination unit for the transport of barrels that can be used with either an overhead crane or forklift.

For barrels according to EN ISO 15750-2.

Technical data TFA R/TR

Model	Art.-No.	Capacity kg	Jaw capacity Z diameter mm	Weight kg
TFA 0,35/700 R	N52303561	350	420 - 700	5.7
TFA 0,35/700 TR	N52303562	350	420 - 700	9.2

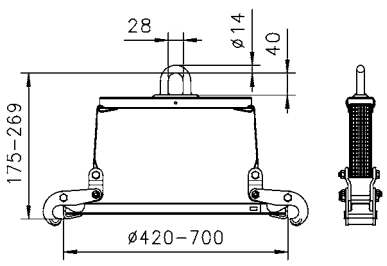

TFA-R

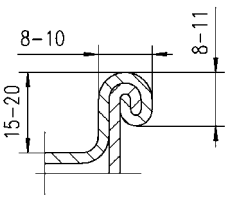

Relevant barrel dimensions

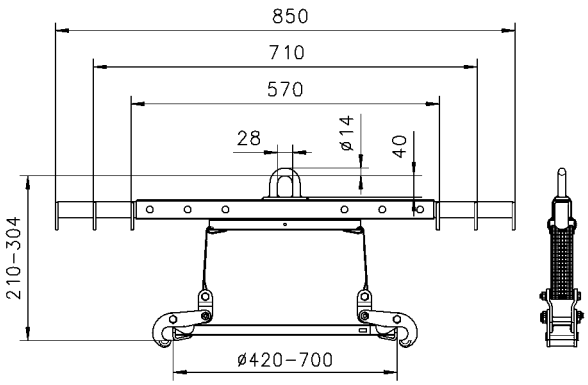

TFA-TR

TFRK
Barrel rim clamp

Capacity 500 kg

The TFRK barrel rim clamp can be used individually, as a pair, or as a multi-legged chain sling.

The clamp grabs under the rim of the barrel. A spring-loaded cam prevents the accidental opening of the clamp.

INFO

For barrels according to EN ISO 15750-2.

Technical data TFRK

Model	Art.-No.	Capacity kg	Weight kg
TFRK	N52203456	500	1.5

Dimensions TFRK

Model	TFRK 0,5
A, mm	152
B, mm	150
C, mm	127
D, mm	30
E, mm	21
F, mm	41
G, mm	17
Ø H, mm	40

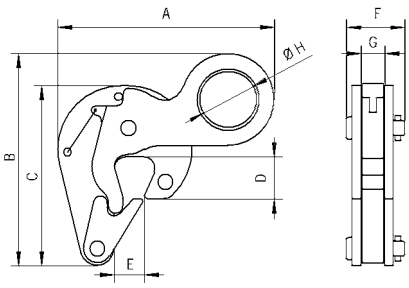

TFK
Barrel clamp

Capacity 500 kg

Its light weight and small overall design makes it ideal for lifting barrels where access or space is limited.

The center of gravity of the barrel is the lifting point during transport.

INFO

For barrels according to EN ISO 15750-2.

Technical data TFK

Model	Art.-No.	Capacity kg	Weight kg
TFK 0,5	N52203455	500	7.3

Dimensions TFK

Model	TFK 0,5
A, mm	479
B, mm	350
C, mm	410
D, mm	300
Ø E, mm	50

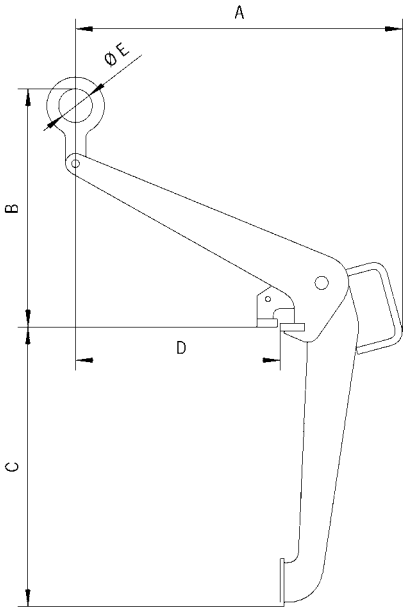

TKA/d
Crate grab with tipping device

Capacity 150 kg

The crate grab with tipping device is an absolutely safe unit, which not only securely transports stacking boxes, but can empty them in mid-air as well.

The crate grab is very robust but still very easy to operate and complies with the relevant standards and EC directives.

A safety lever system prevents the accidental opening of the grab.

The clamping jaws tightly grab under the rim of the crate without damaging the crate. To engage the tipping motion in order to empty the crate, the safety lock must be manually unlocked. The tipping motion is limited to 120°. This prevents the crate from flipping completely over while emptying, thereby reducing the risk of injury.

Optional

- Grabs for other sizes of crates.

INFO

Please provide the crate dimensions or a sample crate when ordering.

Technical data TKA/d

Model	Art.-No.	Capacity kg	Weight kg
TKA 0,15/330d	N52123220	150	25.8
TKA 0,15/480d	N52123225	150	26.0

Dimensions TKA/d

Model	TKA 0,15/330d	TKA 0,15/480d
A, mm	200 - 300	300
B, mm	315 - 330	470 - 480
L, mm	465 - 540	550 - 660

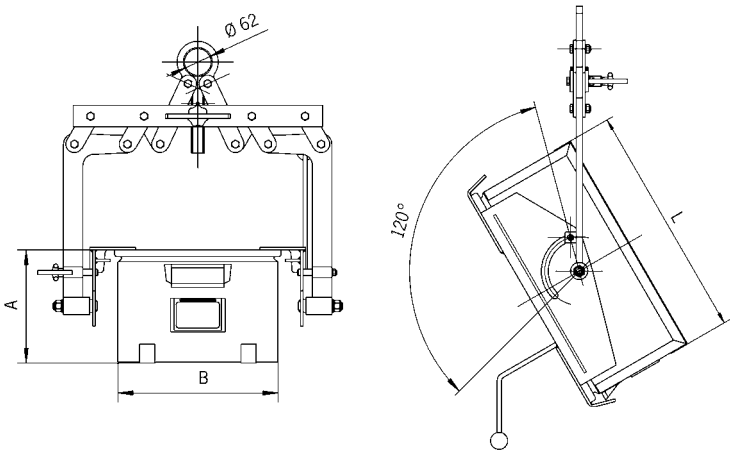

TKA a/i
Crate grab

Capacity 250 kg

The easy-handling crate grab, which grabs on the side plates or the front sides of the crate, transports crates safely and without damaging them.

The moveable jaws press the edge of the crate gently against the outside grab support rails. Stacking boxes made of steel or plastic will not get deformed. After the box has been set down, the safety device holds the grab open.

When lifting the crate and grabbing the support rails, the safety device must be manually pulled back until it lies over the safety bolt. With further lifting, the jaws grab under the outer top edge of the crate and lift it up safely.

The crate grab is available as an external or internal operating grab.

TKA.../...a external operating

TKA.../...i internal operating

TKA.../...i internal operating

INFO

Please provide the crate dimensions or a sample crate when ordering.

Technical data TKA a/i

Model	Art.-No.	Capacity kg	Weight kg	Jaw capacity mm
TKA 0,25/320a	N52103210	250	9.3	320
TKA 0,25/480a	N52103207	250	9.3	480
TKA 0,25/600a	N52103208	250	9.3	600
TKA 0,25/320i	N52103204	250	8.5	320
TKA 0,25/480i	N52103206	250	8.5	480
TKA 0,25/600i	N52103209	250	8.5	600

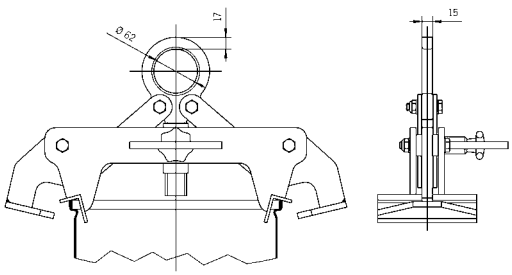

TKA.../...a external operating

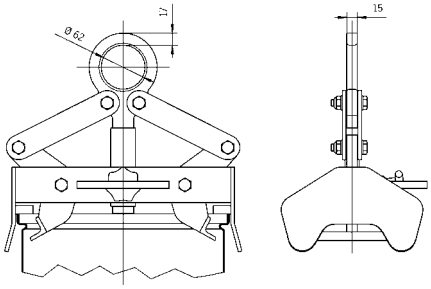

TKA.../...i internal operating

BTG
Concrete pipe lifting gear

Capacity 1500 - 3000 kg

Lifting gear for the vertical transport of concrete pipe and culverts must be very versatile. Most important, it must be absolutely safe and easy to handle under even the harshest conditions.

The Tigrip concrete pipe lifting gear meets all these requirements. It is a three legged lifting system for the safe and non-marring transport of concrete pipes up to a diameter of Ø 2000 mm and a load of up to 3 t.

The jaw capacity is designed for concrete pipe thicknesses from 40 - 220 mm.

Attachment and removal of the clamps can be done easily due to the handles that have been incorporated into each clamp.

Features

- Solid design
- Safety factor 4:1
- Simple and safe handling
- Large jaw capacity
- For the toughest operating conditions
- Lightweight design
- Service-friendly

INFO

For concrete pipes according to DIN 4034.

Lifting gear for concrete pipe up to a diameter of Ø 3000 mm available on request!

Technical data BTG

Model	Art.-No.	Capacity [1] kg	Jaw capacity Z mm	Mouth depth E mm	Pressure line F mm	Chain Ø mm	Weight kg
BTG 1,5/120	N54609200	1500	40 - 120	165	100	6	35
BTG 3,0/180 TM-N	N54609204	3000	50 - 180	245	175	10	90
BTG 3,0/220 TM-N	N54609206	3000	90 - 220	245	175	10	94

[1] Per lifting gear - three legged

Dimensions BTG

Model	BTG 1,5/120	BTG 3,0/180 TM-N	BTG 3,0/220 TM-N
A, mm	135	180	180
B, mm	75	100	100
Ø C, mm	18	26	26
D, mm	180	310	310

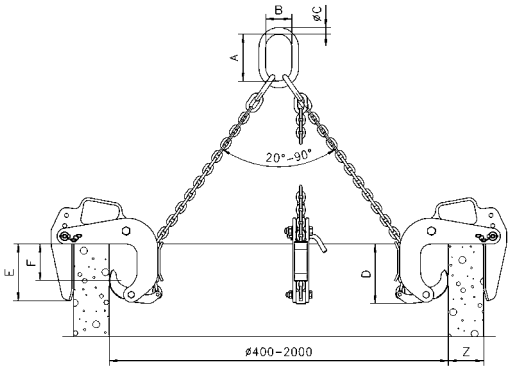

TCP
Trench shield grab

Capacity 1500 - 5500 kg

The TCP grab is suitable for vertical positioning and transportation of trench shields.

Once the grab is set onto the trench shield, a spring-loaded bolt locks itself into the hole of the shield. Releasing the bolt is done with the 15 m pull cord attached to the grab.

Technical data TCP

Model	Art.-No.	Capacity kg	Weight kg
TCP 1,5	N56000001	1500	12.2
TCP 3,0	N56000002	3000	19.5
TCP 5,5	N56000003	5500	26.7

Dimensions TCP

Model	TCP 1,5	TCP 3,0	TCP 5,5
A, mm	207	226	269
B, mm	488	517	575
C, mm	218	218	218
D, mm	90	100	120
E, mm	18	24	24
Ø F, mm	20	24	30
G, mm	180	180	180
Ø H, mm	50	63	89

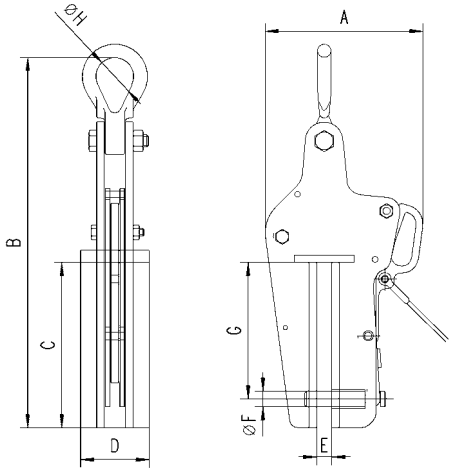

TPP
Trench shield clamp

Capacity 3000 - 8000 kg

The TPP trench shield clamp is similar to a regular plate clamp in its construction but has a much deeper jaw.

The compact construction combined with a high capacity makes it ideal for pulling trench shields out of the ground. A safety lock prevents the accidental opening of the clamp.

Technical data TPP

Model	Art.-No.	Capacity kg	Jaw capacity mm	Weight kg
TPP 3	N51502418	3000	0 - 16	16.0
TPP 8	N51502416	8000	0 - 30	27.8

Dimensions TPP

Model	TPP 3	TPP 8
A, mm	224	294
B, mm	325	445
Ø C, mm	20	30
D, mm	88	109
E, mm	147	194
F, mm	25	42
G, mm	123	146
H, mm	60	72
I, mm	20	25
J, mm	18	26

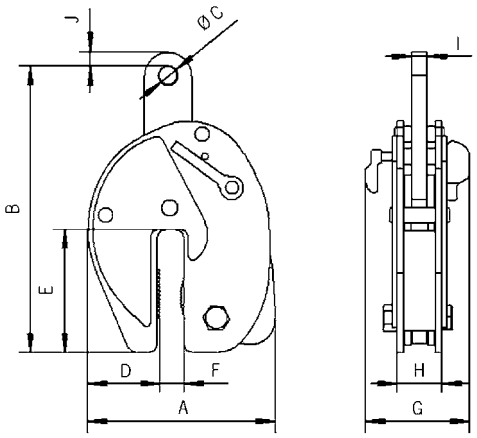

TRO
Pipe hook

Capacity 2000 - 10000 kg

The pipe hooks are used in pairs for the safe transport of pipes.

Scope of delivery

The shackles are included with the hooks.

Technical data TRO for 60° - 90° chain-top angle

Model	Art.-No.	Capacity [1] kg	Weight [1] kg
TRO 2/90	N53508004	2000	3.1
TRO 4/90	N53508005	4000	5.6
TRO 6/90	N53508006	6000	10.5
TRO 8/90	N53508007	8000	17.8
TRO 10/90	N53508008	10000	22.0

[1]Per pair

Dimensions TRO for 60° - 90° chain-top angle

Model	TRO 2/90	TRO 4/90	TRO 6/90	TRO 8/90	TRO 10/90
t, mm	20	30	30	40	40
A, mm	0 - 40	0 - 50	0 - 60	0 - 70	0 - 80
B, mm	35	40	51	55	69
C, mm	40	48	62	67	80
D, mm	62	77	90	105	115
E, mm	62	77	90	105	115
F, mm	116	142	173	190	221
Ø G, mm	16.3	24.3	24.3	30.3	30.3
H, mm	47.6	72.2	72.2	95.3	95.3
Ø I , mm	12.7	19	19	25.4	25.4
J, mm	30.2	44.5	44.5	58.7	58.7

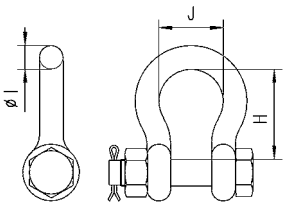

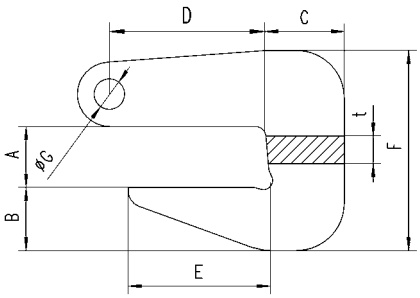

Spreader beam range

Bulkier or heavier loads must be carried on multiple points to ensure safe weight distribution and less sagging. The extensive TIGRIP® range provides a vast choice of load capacities, working widths, adjustment ranges and hook types to cater for the great majority of applications. In addition to our quality-engineered, robust and cost-effective standard range, we can also provide special designs to meet individual, bespoke customer requirements.

Options include side welding hooks (so-called cow horns), that take rope loops or lifting bands' crane eye for carrying pipes. Rolls or rollers on two or more points; star crossbars for carrying cylindrical items, or transverse crossbars for four point suspension, a further version of the reliable, easy to use and safe TIGRIP® crane hook spreader beams.

Spreader beams can be used for a diverse range of shapes and designs, and can be individually designed to meet specific applications. The following illustrations provide a short overview of the many designs available. Suspension and load carrying variants can be easily combined with most designs.

Suspension variants

Eyelet suspension

Standard suspension for use with single hooks according to DIN 15401

Possible for defined load centre of gravity for symmetrical but also asymmetrical loads.

Chain suspension

To stabilise swinging movements

Multitude of options in combination with our chain programme. Lifting ring for single hooks but also double hooks Shortening hooks allow the centre of gravity to be adjusted for asymmetrical loads.

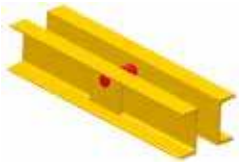

Internal bolt suspension

To reduce the build height

Fixed welded-on but also plug-in variants possible.

Double eyelet suspension for two crane operation

Allows the spreader beam to be used on two cranes at the same time.

Each suspension variant can be operated as a double suspension.

Bracket suspension

For use with double hooks according to DIN 15402

Load carrying variants

Eyehooks

with forged safety latch

For use with any sling or sling points.

Swivel hooks

Allows alignment of the hook to the sling point.

Variants possible with plain-bearing mounted swivel (cannot be rotated under load) and also ball-bearing mounted swivel (can be rotated under load)

Front welded-on hook (cow horn with safety latch)

To reduce the height on single spreader beam

Welded-on hooks (cow horns with safety latch)

For use with two single-stranded or singly wrapped sling
Also possible with adjusting bracket.

Mounting eyelets

for fixed slings

With the mounting eyelets, the spreader beam can be combined with any slings from our programme.

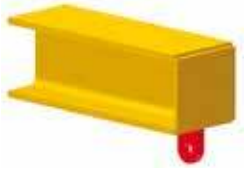

Centre hooks

For crane use if the crossbar is not required.

With the centre hook there is no need to place and remove the spreader beam.
Variants possible as eyehooks or swivel hooks.

TTS-E
Spreader beam, non-adjustable

Capacity 1000 - 10000 kg

For the transport of symmetrical loads

Features

- Lifting brackets for single hook according to DIN 15401
- Eyehooks with forged safety latch

Optional

- Other capacities
- Working widths according customer requirements
- Accentrical suspension for asymmetrical loads

Technical data TTS-E

Model	Art.-No.	Capacity kg	Working width Z mm	Hook mouth mm	Weight kg
TTS 1,0/1000 E	N53106201	1000	1000	23	23
TTS 2,0/1000 E	N53106202	2000	1000	23	25
TTS 3,0/1000 E	N53106203	3000	1000	30	28
TTS 5,0/1000 E	N53106204	5000	1000	38	41
TTS 7,5/1000 E	N53106205	7500	1000	42	50
TTS 10,0/1000 E	N53106206	10000	1000	42	61
TTS 1,0/1500 E	N53106211	1000	1500	23	31
TTS 2,0/1500 E	N53106212	2000	1500	23	33
TTS 3,0/1500 E	N53106213	3000	1500	30	41
TTS 5,0/1500 E	N53106214	5000	1500	38	64
TTS 7,5/1500 E	N53106215	7500	1500	42	74
TTS 10,0/1500 E	N53106216	10000	1500	42	90
TTS 1,0/2500 E	N53106221	1000	2500	23	46
TTS 2,0/2500 E	N53106222	2000	2500	23	69
TTS 3,0/2500 E	N53106223	3000	2500	30	88
TTS 5,0/2500 E	N53106224	5000	2500	38	106
TTS 7,5/2500 E	N53106225	7500	2500	42	148
TTS 10,0/2500 E	N53106226	10000	2500	42	181
TTS 1,0/3500 E	N53106231	1000	3500	23	77
TTS 2,0/3500 E	N53106232	2000	3500	23	118
TTS 3,0/3500 E	N53106233	3000	3500	30	138
TTS 5,0/3500 E	N53106234	5000	3500	38	167
TTS 7,5/3500 E	N53106235	7500	3500	42	235
TTS 10,0/3500 E	N53106236	10000	3500	42	272
TTS 1,0/5000 E	N53106241	1000	5000	23	163
TTS 2,0/5000 E	N53106242	2000	5000	23	189
TTS 3,0/5000 E	N53106243	3000	5000	30	223
TTS 5,0/5000 E	N53106244	5000	5000	38	295
TTS 7,5/5000 E	N53106245	7500	5000	42	372
TTS 10,0/5000 E	N53106246	10000	5000	42	478

Dimensions TTS-E

Model	TTS 1,0/1000 E	TTS 2,0/1000 E	TTS 3,0/1000 E	TTS 5,0/1000 E	TTS 7,5/1000 E	TTS 10,0/1000 E
B, mm	405	430	500	615	720	800
C, mm	110	135	160	180	200	260
D, mm	25	30	35	40	60	70
E, mm	60	75	90	100	130	130

Model	TTS 1,0/1500 E	TTS 2,0/1500 E	TTS 3,0/1500 E	TTS 5,0/1500 E	TTS 7,5/1500 E	TTS 10,0/1500 E
B, mm	405	430	520	635	740	820
C, mm	110	135	160	180	200	260
D, mm	25	30	35	40	60	70
E, mm	60	75	90	100	130	130

Model	TTS 1,0/2500 E	TTS 2,0/2500 E	TTS 3,0/2500 E	TTS 5,0/2500 E	TTS 7,5/2500 E	TTS 10,0/2500 E
B, mm	405	470	560	655	780	860
C, mm	110	135	160	180	200	260
D, mm	25	30	35	40	60	70
E, mm	60	75	90	100	130	130

Model	TTS 1,0/3500 E	TTS 2,0/3500 E	TTS 3,0/3500 E	TTS 5,0/3500 E	TTS 7,5/3500 E	TTS 10,0/3500 E
B, mm	435	490	580	695	800	880
C, mm	110	135	160	180	200	260
D, mm	25	30	35	40	60	70
E, mm	60	75	90	100	130	130

Model	TTS 1,0/5000 E	TTS 2,0/5000 E	TTS 3,0/5000 E	TTS 5,0/5000 E	TTS 7,5/5000 E	TTS 10,0/5000 E
B, mm	475	510	600	715	820	920
C, mm	110	135	160	180	200	260
D, mm	25	30	35	40	60	70
E, mm	60	75	90	100	130	130

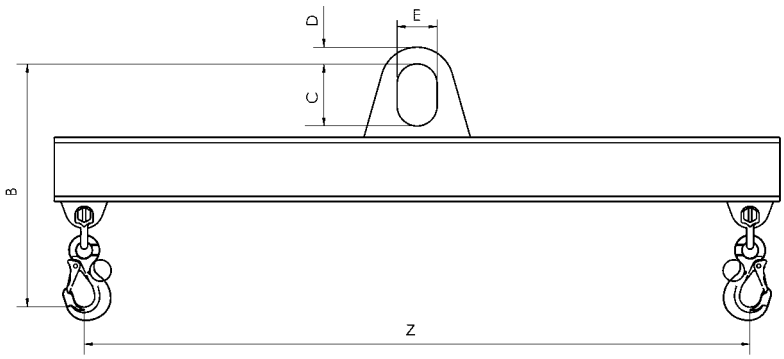

INFO

The spreader beams can be combined with the different suspension types, see pages 216 - 217.

TTS
Spreader beam, adjustable

Capacity 1000 - 25000 kg

For the transport of symmetrical and asymmetrical loads.

Features

- Lifting brackets for single hook according to DIN 15401
- Adjustment with grids
- Adjustable bracket with handle and swivel hook (cannot be rotated under load).

Technical data TTS

Model	Art.-No.	Capacity kg	Working width Z mm	Hook mouth mm	Weight kg
TTS 1,0/1500	N53106001	1000	700 - 1500	18	40
TTS 2,0/1500	N53106002	2000	700 - 1500	18	41
TTS 3,0/1500	N53106003	3000	700 - 1500	21	53
TTS 5,0/1500	N53106004	5000	700 - 1500	23	79
TTS 7,5/1500	N53106005	7500	700 - 1500	32	98
TTS 10,0/1500	N53106006	10000	700 - 1500	32	117
TTS 12,5/1500	N53106007	12500	700 - 1500	40	116
TTS 15,0/1500	N53106008	15000	700 - 1500	40	137
TTS 20,0/1500	N53106009	20000	700 - 1500	50	180
TTS 25,0/1500	N53106010	25000	700 - 1500	50	226
TTS 1,0/2500	N53106011	1000	1500 - 2500	18	58
TTS 2,0/2500	N53106012	2000	1500 - 2500	18	84
TTS 3,0/2500	N53106013	3000	1500 - 2500	21	105
TTS 5,0/2500	N53106014	5000	1500 - 2500	23	127
TTS 7,5/2500	N53106015	7500	1500 - 2500	32	178
TTS 10,0/2500	N53106016	10000	1500 - 2500	32	215
TTS 12,5/2500	N53106017	12500	1500 - 2500	40	198
TTS 15,0/2500	N53106018	15000	1500 - 2500	40	237
TTS 20,0/2500	N53106019	20000	1500 - 2500	50	287
TTS 25,0/2500	N53106020	25000	1500 - 2500	50	342
TTS 1,0/3500	N53106021	1000	1700 - 3500	18	95
TTS 2,0/3500	N53106022	2000	1700 - 3500	18	137
TTS 3,0/3500	N53106023	3000	1700 - 3500	21	162
TTS 5,0/3500	N53106024	5000	1700 - 3500	23	228
TTS 7,5/3500	N53106025	7500	1700 - 3500	32	278
TTS 10,0/3500	N53106026	10000	1700 - 3500	32	317
TTS 12,5/3500	N53106027	12500	1700 - 3500	40	295
TTS 15,0/3500	N53106028	15000	1700 - 3500	40	340
TTS 20,0/3500	N53106029	20000	1700 - 3500	50	451
TTS 25,0/3500	N53106030	25000	1700 - 3500	50	512
TTS 1,0/5000	N53106031	1000	2000 - 5000	18	190
TTS 2,0/5000	N53106032	2000	2000 - 5000	18	219
TTS 3,0/5000	N53106033	3000	2000 - 5000	21	260
TTS 5,0/5000	N53106034	5000	2000 - 5000	23	372
TTS 7,5/5000	N53106035	7500	2000 - 5000	32	423
TTS 10,0/5000	N53106036	10000	2000 - 5000	32	531
TTS 12,5/5000	N53106037	12500	2000 - 5000	40	449
TTS 15,0/5000	N53106038	15000	2000 - 5000	40	568
TTS 20,0/5000	N53106039	20000	2000 - 5000	50	691
TTS 1,0/8000	N53106040	1000	3000 - 8000	18	342
TTS 2,0/8000	N53106041	2000	3000 - 8000	18	458
TTS 3,0/8000	N53106042	3000	3000 - 8000	21	547
TTS 5,0/8000	N53106043	5000	3000 - 8000	23	788
TTS 7,5/8000	N53106044	7500	3000 - 8000	32	883
TTS 10,0/8000	N53106045	10000	3000 - 8000	32	1319
TTS 12,5/8000	N53106046	12500	3000 - 8000	40	979
TTS 15,0/8000	N53106047	15000	3000 - 8000	40	1046

Dimensions TTS

Model	TTS 1,0/1500	TTS 2,0/1500	TTS 3,0/1500	TTS 5,0/1500	TTS 7,5/1500	TTS 10,0/1500	TTS 12,5/1500	TTS 15,0/1500	TTS 20,0/1500	TTS 25,0/1500
B, mm	440	470	570	655	740	835	865	910	1020	1230
C, mm	110	135	160	180	200	260	260	260	260	300
D, mm	25	30	35	40	60	70	75	85	90	100
E, mm	60	75	90	100	130	130	140	140	160	160

Model	TTS 1,0/2500	TTS 2,0/2500	TTS 3,0/2500	TTS 5,0/2500	TTS 7,5/2500	TTS 10,0/2500	TTS 12,5/2500	TTS 15,0/2500	TTS 20,0/2500	TTS 25,0/2500
B, mm	440	505	610	675	785	880	915	955	1060	1255
C, mm	110	135	160	180	200	260	260	260	260	300
D, mm	25	30	35	40	60	70	75	85	90	100
E, mm	60	75	90	100	130	130	140	140	160	160

Model	TTS 1,0/3500	TTS 2,0/3500	TTS 3,0/3500	TTS 5,0/3500	TTS 7,5/3500	TTS 10,0/3500	TTS 12,5/3500	TTS 15,0/3500	TTS 20,0/3500	TTS 25,0/3500
B, mm	440	530	635	715	810	905	935	980	1115	1300
C, mm	110	135	160	180	200	260	260	260	260	300
D, mm	25	30	35	40	60	70	75	85	90	100
E, mm	60	75	90	100	130	130	140	140	160	160

Model	TTS 1,0/5000	TTS 2,0/5000	TTS 3,0/5000	TTS 5,0/5000	TTS 7,5/5000	TTS 10,0/5000	TTS 12,5/5000	TTS 15,0/5000	TTS 20,0/5000
B, mm	495	550	655	740	830	950	980	1025	1155
C, mm	110	135	160	180	200	260	260	260	260
D, mm	25	30	35	40	60	70	75	85	90
E, mm	60	75	90	100	130	130	140	140	160

Model	TTS 1,0/8000	TTS 2,0/8000	TTS 3,0/8000	TTS 5,0/8000	TTS 7,5/8000	TTS 10,0/8000	TTS 12,5/8000	TTS 15,0/8000
B, mm	515	590	700	785	895	1010	1045	1085
C, mm	110	135	160	180	200	260	260	260
D, mm	25	30	35	40	60	70	75	85
E, mm	60	75	90	100	130	130	140	140

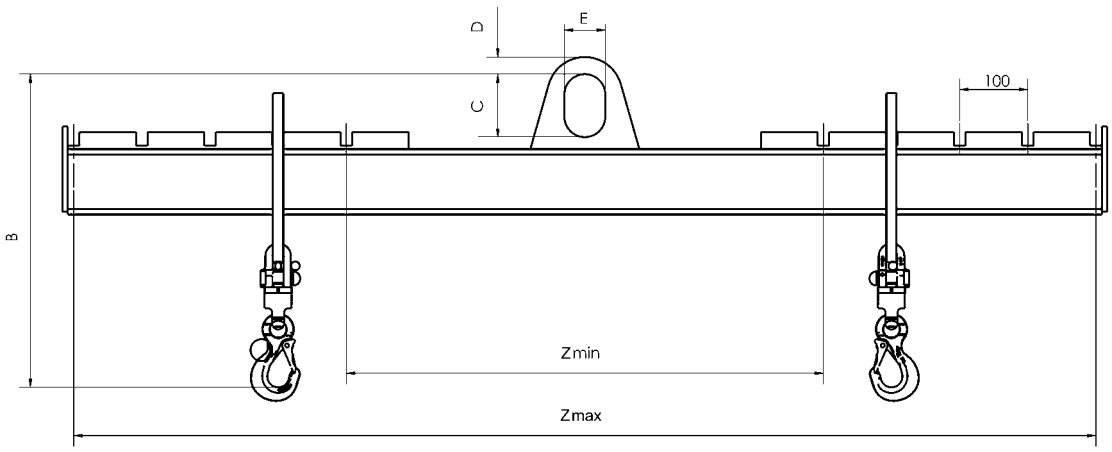

INFO

The spreader beams can be combined with the different suspension types, see pages 216 - 217.

TTS-HE
H-frame spreader beam

Capacity up to 10000 kg

For the transport of symmetrical loads.

Features

- Lifting brackets for single hook according to DIN 15401
- Eyehooks with forged safety latch

Optional

- Accentrical suspension for asymmetrical loads

INFO

Capacity, working length and width designed on individual customer requirements.

The spreader beams can be combined with the different suspension types, see pages 216 - 217.

Technical questionnaire

Capacity	_____	kg
Working length	_____	mm
Working width	_____	mm

TTS-H
H-frame spreader beam

Capacity up to 25000 kg

For the transport of symmetrical and asymmetrical loads.

Features

- Lifting brackets for single hook according to DIN 15401
- Adjustment with grids
- Adjustable bracket with handle and swivel hook (cannot be rotated under load)

INFO

Capacity, working length and width designed on individual customer requirements.

The spreader beams can be combined with the different suspension types, see pages 216 - 217.

Technical questionnaire

Capacity	_____	kg
Working length, min.	_____	mm
Working length, max.	_____	mm
Working width, min.	_____	mm
Working width, max.	_____	mm

TTS
Spreader beam for box pallets

Capacity 1000 - 3000 kg

Box pallets with DIN 15155 specifications, are usually moved around with a forklift, but are so sturdy that they can be picked up and transported with a spreader beam grab and an overhead crane hooked up to the top of the box pallet's frame.

Thanks to these spreader beams, the shipping and receiving area is no longer entirely dependent on floor-level material handling equipment such as forklifts.

The version designed for the individual transport of box pallets is equipped with two fixed yokes and two pivoted ones, interconnected with a control bar. The load tackling gear is fixed and unfixed by only one person.

Technical data TTS

Model	Art.-No.	Capacity kg	Weight kg
TTS 1,0/1240 - 810	N53207001	1000	38
TTS 2,0/1240 - 810	N53207002	2000	61
TTS 3,0/1240 - 810	N53207003	3000	80

Dimensions TTS

Model	TTS 1,0/1240 - 810	TTS 2,0/1240 - 810	TTS 3,0/1240 - 810
B, mm	600	600	600
C, mm	410	495	520
D, mm	195	215	215
E, mm	125	180	205
F, mm	100	150	170
G, mm	80	100	130
H, mm	28	30	40
I, mm	15	20	25
Z, mm	1175	1175	1175

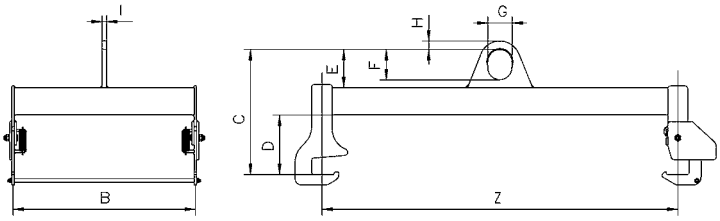

TTB
Spreader beam for Big-Bags

Capacity 1000 - 2000 kg

This four-point spreader beam in a fixed frame construction with weld-on hooks and safety latch is designed for lifting and transporting of Big-Bags.

Technical data TTB

Model	Art.-No.	Capacity kg	Working width Z mm	Weight kg
TTB 1,0/1090 - 1090	N53156300	1000	750 - 800	27
TTB 1,0/1320 - 1320	N53156301	1000	900 - 970	33
TTB 2,0/1090 - 1090	N53156302	2000	750 - 800	42
TTB 2,0/1320 - 1320	N53156303	2000	900 - 970	44

Dimensions TTB

Model	TTB 1,0/1090 - 1090	TTB 1,0/1320 - 1320	TTB 2,0/1090 - 1090	TTB 2,0/1320 - 1320
B, mm	210	210	240	240
C, mm	60	60	75	75
D, mm	110	110	135	135

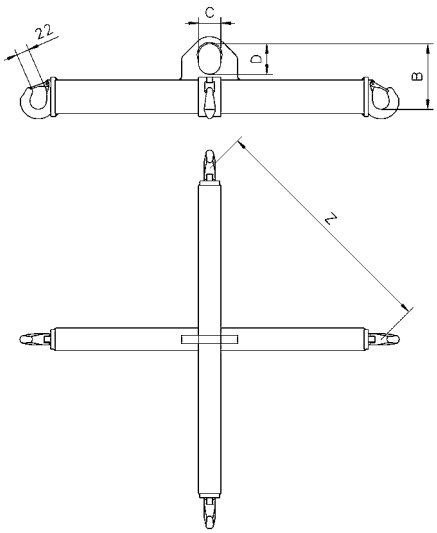

TTS-Z
Fork lift cross beam

Capacity 2000 - 3150 kg

The model TTS-Z with two bags is used for forklift tines and has one centered, pivoting eye hook (do not pivot under load). The fork lift cross beam is fastened with two spindles and ensures safety while lifting.

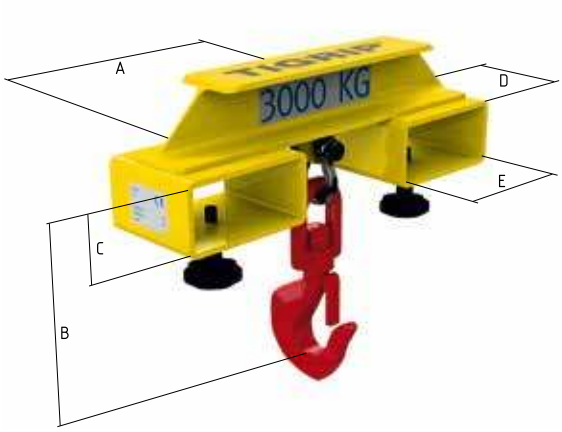

Technical data TTS-Z

Model	Art.-No.	Capacity kg	Overall height B mm	Dim C mm	Dim D mm	Dim E mm	Weight kg
TTS 2,0/Z	N4300000170	2000	246	70	160	150	14.0
TTS 3,15/Z	N4300015315	3150	274	84	160	184	19.0

TZH
Tine hook

Capacity 1500 - 5000 kg

For fastening hoisting equipment and loads to single forklift tines. The TZH are pushed onto the forklift tines and are fastened with two spindles. The pivoting as well as swivelling hook with safety latch ensures safety while lifting.

Technical data TZH

Model	Art.-No.	Capacity kg	Weight kg
TZH 1,5/150	N55100001	1500	7.2
TZH 3,0/150	N55100002	3000	10.8
TZH 5,0/150	N55100004	5000	17.3

Dimensions TZH

Model	TZH 1,5/150	TZH 3,0/150	TZH 5,0/150
A, mm	100	100	100
B, mm	150	150	150
C min., mm	310	350	350
C max., mm	360	400	400
D, mm	260	270	295
E, mm	74	74	74
F, mm	120	120	120
G, mm	25	28	34

INFO

Attention must be paid to the working load limit of the single forklift tines.

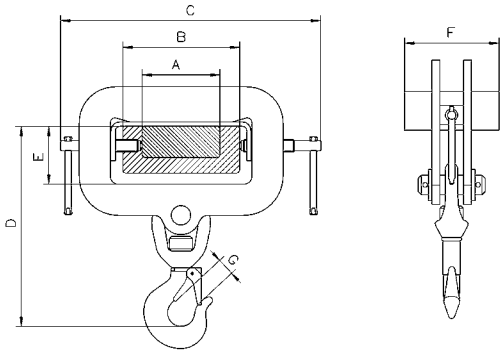

TZH, swivel hooks, pivoting and swivelling

INFO

For the transport of loads above persons (e.g. on construction sites) appropriate security measures against falling loads or parts must be taken.

The load must not exceed the fork length.

TKG vhs Crane forks

Capacity 200 - 5000 kg

These crane forks are equipped with adjustable tines, height adjustability and an automatic balancing system. Crane forks with automatic balancing* tend to point their tines upward when being transported. This prevents the load from unintentionally slipping off the tines.

The shackle is movable and runs on a track depending on the load. The automatic balancing engages by a pressurized gas spring once the forks are loaded. The load will always be in the center of gravity of the forks, ensuring a safe transport.

***The automatic balancing system requires a minimum load of 20 % of the crane forks' working load limit!**

Features

- All crane forks comply with the latest standards and CE-directives.
- Safety factor 4:1
- Maintenance-free
- Highly visible safety colour
- For the transport of rings or coils, the fork tines are simply pushed together.
- Easily adjustable tines for all pallet sizes.

Scope of delivery

Chain for load securing

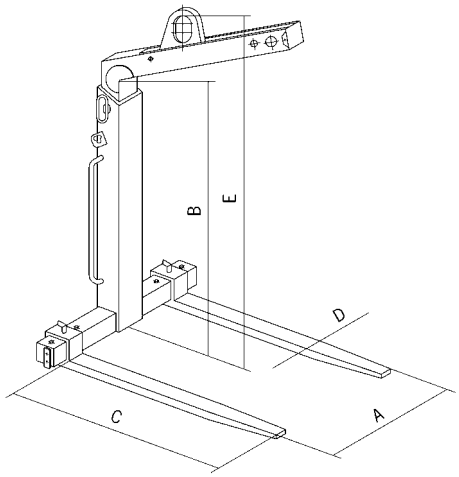

Technical data TKG vhs

Model	Art.-No.	Capacity kg	Weight kg
TKG 1,0 vhs	N53407531	200 - 1000	128
TKG 1,5 vhs	N53407532	300 - 1500	158
TKG 2,0 vhs	N53407533	400 - 2000	203
TKG 3,0 vhs	N53407534	600 - 3000	260
TKG 5,0 vhs	N53407535	1000 - 5000	413

Dimensions TKG vhs

Model	TKG 1,0 vhs	TKG 1,5 vhs	TKG 2,0 vhs	TKG 3,0 vhs	TKG 5,0 vhs
Adjustment of tines A, mm	350 - 900	350 - 900	400 - 900	450 - 900	500 - 1000
Usable height B, mm	1100 - 1600	1300 - 2000	1300 - 2000	1300 - 2000	1300 - 2000
Length of tines C, mm	1000	1000	1000	1000	1000
Section of tines D, mm	100 x 30	100 x 40	120 x 40	120 x 50	150 x 60
Overall height E, mm	1420 - 1920	1650 - 2350	1655 - 2355	1720 - 2420	1710 - 2410

TKG vh
Crane forks

Capacity 1000 - 5000 kg

These crane forks are equipped with adjustable tines and height adjustability. The balancing system engages when the shackle is manually hooked into the appropriate notch.

Features

- All crane forks comply with the latest standards and CE-directives.
- Safety factor 4:1
- Maintenance-free
- Highly visible safety colour
- For the transport of rings or coils, the fork tines are simply pushed together.
- Easily adjustable tines for all pallet sizes.

Scope of delivery

Chain for load securing

INFO

The load must not exceed the fork length.

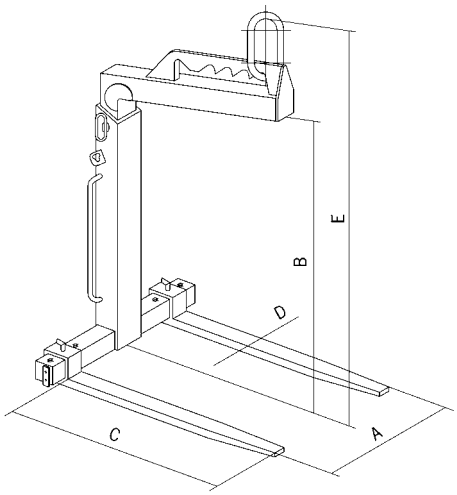

Technical data TKG vh

Model	Art.-No.	Capacity kg	Weight kg
TKG 1,0 vh	N53407511	1000	128
TKG 1,5 vh	N53407512	1500	148
TKG 2,0 vh	N53407513	2000	193
TKG 3,0 vh	N53407514	3000	248
TKG 5,0 vh	N53407515	5000	388

Dimensions TKG vh

Model	TKG 1,0 vh	TKG 1,5 vh	TKG 2,0 vh	TKG 3,0 vh	TKG 5,0 vh
Adjustment of tines A, mm	350 - 900	350 - 900	400 - 900	450 - 900	500 - 1000
Usable height B, mm	1100 - 1600	1300 - 2000	1300 - 2000	1300 - 2000	1300 - 2000
Length of tines C, mm	1000	1000	1000	1000	1000
Section of tines D, mm	100 x 30	100 x 40	120 x 40	120 x 50	150 x 60
Overall height E, mm	1390 - 1890	1600 - 2300	1640 - 2340	1670 - 2370	1700 - 2400

- TKI with digital display and radio control

The crane weigher can be operated by radio control. The displayed values can be taken off the remote control device and can be transferred to a PC. Several measured values can be totalled and saved. Various functions like piece counting, maximum weight (gross/net) can be realized.

Features

- TKI crane weigher has the same features like the model TKE.
- Remote control and data exchange via radio transmission.
- USB interface
- Accumulation memory

Optional

- User software for data processing
- PC cable
- Lower hook

Scope of delivery

- Crane weigher with infrared remote control
- Remote control and data exchange via radio transmission.
- 8 x 1.5 V AA batteries
- Carrying case
- Test certificate
- Upper and lower shackle

Crane weighers

Measuring range 0 - 9.5 t

The crane weighers TKE and TKI are compact measuring devices for the weighing of loads.
Due to the compact design and robust steel housing the crane weighers are suitable for a wide range of applications. The crane weighers have a liquid crystal display (LCD), which can tare as well as show either the gross or the net load.
Both models TKE and TKI are fitted with an infrared remote control with a range of 8 m.

- TKE with digital display

Features

- High accuracy: ± 0,03 % of the weighing range
- Lightweight design
- Easy-to-read display
- Easy to use
- Robust design
- Retains the peak value to memory.
- Operating time of about 40 hours (without radio frequency communication)
- Automatic setting to zero when load indicator is switched on.
- Display of maximum weight (gross/net).
- Display of measuring units on the load indicator.
- Measuring units g, kg, t and lbs.
- Automatic stand-by for a prolonged battery lifetime.

Optional

- Lower hook

Scope of delivery

- Crane weigher with with infrared remote control
- 4 x 1.5 V AA batteries
- Carrying case
- Test certificate
- Upper and lower shackle

Technical data TKE and TKI

Model	TKE 1,5 TKI 1,5			TKE 6,0 TKI 6,0			TKE 9,5 TKI 9,5		
Art.-No. TKE	N53908560			N53908561			N53908562		
Art.-No. TKI	N53908566			N53908567			N53908568		
Measuring range, t	0 - 1.5			0 - 6.0			0 - 9.5		
Breaking load, t	≥ 4.5			≥ 24.0			≥ 38.0		
Weight with lifting accessories, kg	6			10			15		
Resolution step, kg (partition)	up to 300 0.1	up to 600 0.2	up to 1500 0.5	up to 1500 0.5	up to 3000 1.0	up to 6000 2.0	up to 3000 1.0	up to 6000 2.0	up to 9500 5.0
Operation time, approx., h [1]	40								
Temperature range (operation)	- 10 °C up to + 40 °C								
Temperature range (storage)	- 10 °C up to + 40 °C								
Protection	IP 40								
Display (LCD 25 mm high)	5 ½ digits								
Tare range	100 % of rated capacity								
Overload warning	The crane weigher switches off when exceeding the rated load.								

[1] with 4 x 1.5 V AA batteries (without radio frequency communication)

Dimensions TKE and TKI

Model	TKE 1,5 TKI 1,5	TKE 6,0 TKI 6,0	TKE 9,5 TKI 9,5
A, mm	193	226	246
B, mm	175	175	175
C, mm	49	59	80
D, mm	24	37	46
E, mm	44	58	74
F, mm	133	133	133
G, mm	104	104	104
H, mm	330	363	430
J, mm	153	170	180

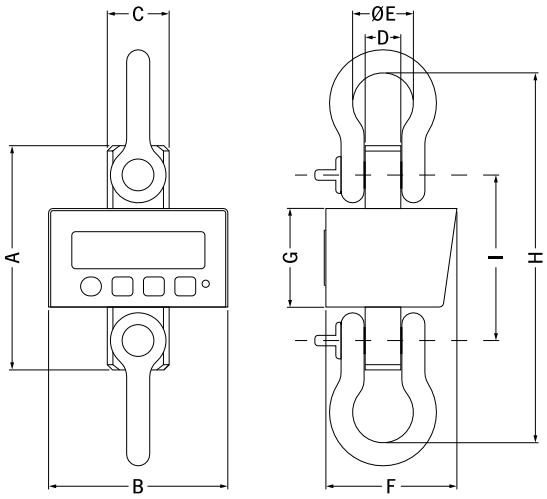

- TKR with digital display and radio control

The crane weigher can be operated by radio control. The displayed values can be taken off the remote control device and can be transferred to a PC. The system can be combined with an easy-to-read display. Several measured values can be totalled and saved.

Features

- TKR crane weigher has the same features like the model TKL plus.
- Remote control and data exchange via radio transmission.
- USB interface
- Accumulation memory

Optional

- External easy-to-read display.

Scope of delivery

- Crane weigher
- Remote control with display
- 7 x 1.5 V AA batteries
- Carrying case
- Test certificate
- PC cable
- User software

Crane weighers

Measuring range 0 - 12 t

The crane weighers TKL and TKR are compact measuring devices for the weighing of loads. Use appropriate attachments like grade 8 forgings between the hook of the hoist or crane, the crane weigher and the load.

The crane weighers have a liquid crystal display (LCD), which can tare as well as show either the gross or the net load. It also indicates overload at 110 % of the rated capacity and the status of the battery.

- TKL with digital display

Features

- High accuracy
- Lightweight design
- Easy-to-read display
- Easy to use
- Robust design
- Housing can be rotated 180°
- Retains the peak value to memory.
- The battery capacity provides for around 200 operating hours.
- Automatic setting to zero when load indicator is switched on.
- Use of rechargeable batteries possible (external battery charger*).
- Display of maximum weight (gross/net).
- Display of measuring units on the load indicator.
- Measuring units kg, t, lbs, to, kN.
- Automatic stand-by for a prolonged battery lifetime.
- Simple change of batteries
- Warning if batteries are low.
- Overload warning

Scope of delivery

- Crane weigher
- 4 x 1.5 V AA batteries
- Carrying case
- Test certificate

* not part of the delivery package.

Technical data TKL and TKR

Model	TKL 1,0 –	TKL 2,0 –	TKL 3,2 –	– TKR 5,0	– TKR 8,0	– TKR 12,0
Art.-No. TKL	N53908446	N53908448	N53908451	–	–	–
Art.-No. TKR	–	–	–	N53908454	N53908456	N53908458
Measuring range, t	0 - 1.0	0 - 2.0	0 - 3.2	0 - 5.0	0 - 8.0	0 - 12.0
Nominal load, t	1.0	2.0	3.2	5.0	8.0	12.0
Limit load, t	1.1	2.2	3.5	5.5	8.8	13.2
Breaking load, t	≥ 4.0	≥ 8.0	≥ 13.0	≥ 20.0	≥ 32.0	≥ 48.0
Weight without lifting accessories, kg	1.85	1.99	2.5	2.7	3.6	3.9
Weight with lifting accessories, kg	3.0	3.5	6.0	7.5	10.5	20.0
Accuracy of the end value	0.1 %	0.1 %	0.1 %	0.1 %	0.1 %	0.1 %
Resolution step, kg (partition)	0.5	1.0	1.0	1.0	2.0	5.0
Operation time, approx., h [1]	200					
Temperature range (operation)	-10 °C up to + 50 °C					
Temperature range (storage)	- 20 °C up to + 70 °C					
Protection	IP 54					
Display (LCD 20.5 mm high)	4 ½ digits					
Tare range	100 % of rated capacity					
Overload warning	Overload warning at 110 % of the rated capacity					

[1] with 4 x 1.5 V AA batteries

Dimensions TKL and TKR

Model	TKL 1,0 –	TKL 2,0 –	TKL 3,2 –	– TKR 5,0	– TKR 8,0	– TKR 12,0
A, mm	389	417	488	571	657	804
B, mm	356	379	441	514	588	709
C, mm	60	60	75	90	100	140
D, mm	110	110	135	160	180	260
E, mm	13	16	18	22	26	35
F, mm	20	25	32	40	49	45
G, mm	70	81	103	126	152	190
H, mm	128	136	140	148	158	176
J, mm	77.4	77.4	84.4	84.4	97.4	97.4

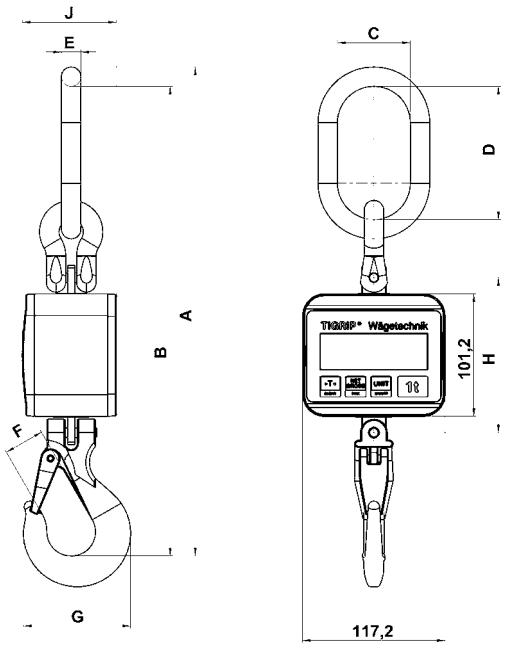

Load indicator

Measuring range 0 - 100 t

The Tigrip® load indicator is a mechanical measuring instrument with electronic display. On account of its flexibility the Tigrip® load indicator has universal applications. Whether used as a conventional crane weigher or to measure forces, it is the economical choice for various applications. It can be used in conjunction with shackles and hooks.
The load indicator is provided with liquid crystal display (LCD), which can tare as well as show either the gross or the net load. It also indicates overload at 110 % of the rated capacity and the status of the battery).

- TZL with digital display

Features

- High accuracy
- Lightweight design
- Easy-to-read display
- Easy to use
- Robust design
- Retains the peak value to memory.
- The battery capacity provides for around 200 operating hours.
- Automatic setting to zero when load indicator is switched on.
- Use of rechargeable batteries possible (external battery charger*).
- Display of maximum weight (gross/net).
- Display of measuring units on the load indicator.
- Measuring units kg, t, lbs, to, kN.
- Automatic stand-by for a prolonged battery lifetime.
- Simple change of batteries
- Warning if batteries are low.
- Overload warning

Scope of delivery

- Load indicator
- 4 x 1.5 V AA batteries
- Carrying case
- Test certificate
- Without shackles and hooks

- TZR with digital display and radio control

The load indicator can be operated via radio control. The displayed values can be taken off the remote control device and can be transmitted to a PC. The system can be combined with an easy-to-read display.
Several measured values can be totalled and saved.

Features

- TZR load indicator has the same features like the model TZL plus.
- Remote control and data exchange via radio transmission.
- USB interface
- Accumulation memory

Optional

- External easy-to-read display.

Scope of delivery

- Load indicator
- Remote control with display
- 7 x 1.5 V AA batteries
- Carrying case
- Test certificate
- Without shackles and hooks
- PC cable
- User software

* not part of the delivery package.

Technical data TZL and TZR

Model	TZL 2,5 –	TZL 5,0 –	TZL 10,0 TZR 10,0	TZL 20,0 TZR 20,0	– TZR 35,0	– TZR 50,0	– TZR 100,0
Art.-No. TZL	N53808324	N53808325	N53808326	N53808327	–	–	–
Art.-No. TZL shackles	CM851A	N42000064	N42000069	N42000069	–	–	–
Art.-No. TZL hooks	N53818351	N53818352	N53818322	N53818324	–	–	–
Art.-No. TZR	–	–	N53808333	N53808335	N53808336	N53808337	N53808338
Art.-No. TZR shackles	–	–	N42000069	N42000069	N42000071	N42000072	N42000075
Art.-No. TZR hooks	–	–	N53818322	N53818324	N53818326	N53818328	N53818330
Measuring range, t	0 - 2.5	0 - 5.0	0 - 10.0	0 - 20.0	0 - 35.0	0 - 50.0	0 - 100.0
Nominal load, t	2.5	5.0	10.0	20.0	35.0	50.0	100.0
Limit load, t	2.75	5.5	11	22	38.5	55	110
Breaking load, t	≥ 10	≥ 20	≥ 40	≥ 80	≥ 140	≥ 200	≥ 400
Weight without lifting accessories, kg	1.7	2.1	3.9	6.8	9.4	14.4	39.3
Accuracy of the end value	0.2 %	0.2 %	0.2 %	0.2 %	0.2 %	0.2 %	0.2 %
Resolution step, kg (partition)	1	1	10	10	10	10	50
Operation time, approx., h [1]	200						
Temperature range (operation)	-10 °C up to + 50 °C						
Temperature range (storage)	- 20 °C up to + 70 °C						
Protection	IP 54						
Display (LCD 20.5 mm high)	4 ½ digits						
Tare range	100 % of rated capacity						
Overload warning	Overload warning at 110 % of the rated capacity						

[1] with 4 x 1.5 V AA batteries

Dimensions TZL and TZR

Model	TZL 2,5 –	TZL 5,0 –	TZL 10,0 TZR 10,0	TZL 20,0 TZR 20,0	– TZR 35,0	– TZR 50,0	– TZR 100,0
A, mm	233	250	325	378	405	450	640
B, mm	118	118	118	141	156	180	260
C, mm	22	27	48	55	66	76	100
D, mm	173	180	213	233	245	264	380
E, mm	19	215	22	32	47	55	80
G, mm	25	305	47	57	67	77	99
H, mm	422	451	644	742	842	942	113
J, mm	604	610	690	780	1000	1170	–
K, mm	34	50	105	92	130	140	300
L, mm	38	44	95	95	114	132	238
M, mm	16	19	35	35	44	51	89
N, mm	25	32	50	70	110	115	–
O, mm	23	37	63	80	123	132	–
P, mm	17	28	44	57	90	97	–
Q, mm	309	315	535	562	665	730	1240

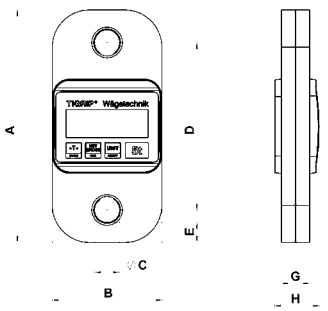

Load indicator TZL/TZR 2.5 up to 100.0 t

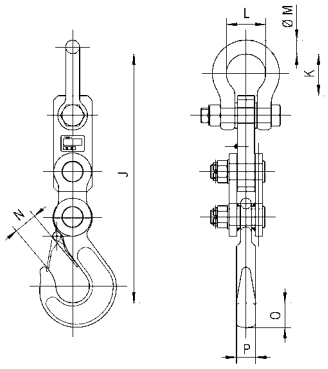

Load indicator TZL/TZR with hook

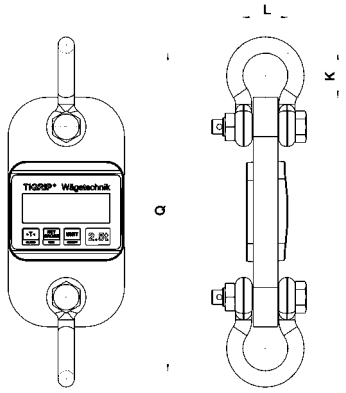

Load indicator TZL/TZR with shackle

YFS
Spring tensioners

Capacity 0.5 - 10.0 kg

YFS-A
Spring tensioners with ratchet locking device

Capacity 2 - 10.0 kg

Spring tensioners are designed to retract the cable when no force is applied. An amount of downward force must be continually applied to keep the suspended object at its extended position.
The torque output of the rewind spring increases as the cable is extended, retracting the suspended object to the uppermost adjusted position when released.

Features

- Stamped steel construction, powder-coated housing
- Automatic drumlock according to DIN 15112
- Additional hanger for the attachment of secondary safety chains according to DIN 15112
- Rope guide made of wear-resistant nylon for reduced wear of rope and body
- Declaration of EC-conformity
- Adjustable cable stop to fix the spring tensioner in the desired position
- Series YFS-A with ratchet-locking device. Locks the out-retracting rope for unrestricted tool movement. This device can be switched ON/OFF, so the spring tensioner can be used with or without the ratchet-locking device.

Applications

Pneumatic power-tools, assembly tools, paint spraying guns, riveting machines, nut runners, grinding and polishing machines.

Adjustment of spring tension YFS-01/02
with central turning wheel and spring lever

Adjustment of spring tension YFS-03/04/05
with central shaft and spring lever

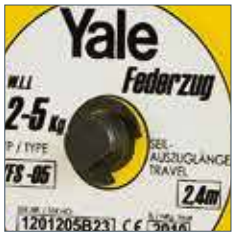

Technical data YFS and YFS-A

Model	Art.-No.	Capacity min. kg	Capacity max. kg	Working range m	Weight kg
YFS-01	N08300047	0.5	1.5	1.6	0.35
YFS-02	N08300048	1.5	3.0	1.5	0.35
YFS-03	N08300049	2.0	5.0	2.4	3.9
YFS-04	N08300050	4.0	6.0	2.4	4.5
YFS-05	N08300051	6.0	10.0	2.4	4.5
YFS-03-A	N08300052	2.0	5.0	2.4	3.9
YFS-04-A	N08300053	4.0	6.0	2.4	4.5
YFS-05-A	N08300054	6.0	10.0	2.4	4.5

Dimensions YFS and YFS-A

Model	YFS-01	YFS-02	YFS-03	YFS-04	YFS-05	YFS-03-A	YFS-04-A	YFS-05-A
A, mm	231	231	423	423	423	423	423	423
B, mm	224	224	214	214	214	214	214	214
C, mm	97	97	191	191	191	191	191	191
Ø D, mm	12	12	19	19	19	19	19	19
E, mm	48	48	79	79	79	91	91	91
F, mm	25	25	43	43	43	55	55	55
G, mm	–	–	71	71	71	71	71	71
H, mm	39	39	80	80	80	80	80	80

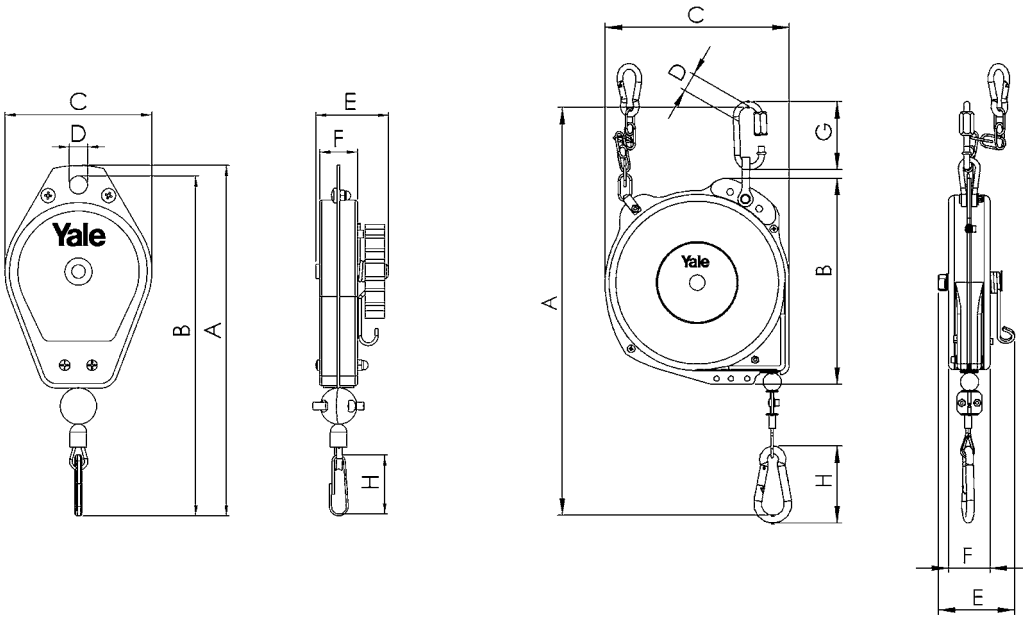

YBF
Spring balancers

Capacity 0.5 - 200 kg

YBF-L
Spring balancers with extended rope length

Capacity 1.5 - 130 kg

Spring balancers are used to relieve the operator from the weight of hand-tools. By using a tapered rope drum the weight of the attached load is compensated, loads up to 200 kg can be moved effortlessly in vertical axis.

Features

- Spring balancers model YBF are designed in accordance with DIN 15112.
- The housing is manufactured from high-tensile aluminium pressure die casting for maximum resistance to impact.
- Manual drum lock for an easy exchange of rope or for changing the attached load.
- The special spring-assembly inside the balancer guarantees a consistent counterbalance throughout the complete working range.
- Easy exchange of wire rope. A small slot in the body facilitates the removal and re-installation of the rope without any need to disassemble the unit.
- Spring assemblies as separate units in a closed steel housing for improved handling during assembly and disassembly. Reduced risk of injuries.
- Rope guide made of wear-resistant nylon for reduced wear of rope and body. Lifetime of the spring balancer is increased. The rope guide can be removed and installed on site without disassembling the rope.
- Load indicator allows easy reading of the capacity set.
- Upper and lower suspension eyes are provided for the attachment of secondary safety chains. Providing additional safety and preventing the spring balancer and load from falling accidentally.

Applications

Spot-welding guns, riveting-machines, slaughterhouse equipment, multiple nut-runners etc.

Load indicator

for:
YBF-09 - YBF-70
YBF-22L - YBF-70L
YBA-15 - YBA-70
YBA-22L - YBA-70L

Rope guide

for:
YBF-09 - YBF-200
YBF-09L - YBF-130L
YBA-15 - YBA-70

Spring assembly

as separate unit in a closed steel housing.
All models with capacities more than 5 kg.

YBA
Spring balancers with safety feature in case of rope breakage

Capacity 9 - 70 kg

YBA-L
Spring balancers with safety feature in case of rope breakage and with extended rope length

Capacity 9 - 70 kg

YBA series spring balancers have the same technical features as the YBF series, but are equipped with an additional safety feature in case of rope breakage.
This mechanism automatically locks the rope in case of accidental dislodging of the suspended weight, breakage of the bottom hook or the rope.
Whipping of the rope and potential injuries to the operator or other personnel in the area is avoided.

This series is used primarily in areas in which higher safety standards are applied or adverse conditions are common (flying sparks etc.) which might cause damages to the rope.

This series is available with standard and extended rope length.

Suspension eye

According DIN 15112 spring balancers must be equipped with additional suspension eyes for the attachment of secondary safety chains.

Easy exchange of wire rope

Without any need to disassemble the unit.
YBF-09 - YBF-100
YBA-15 - YBA-70

Manual drum-lock

For an easy exchange of the rope.
All models with capacity more than 5 kg.

Technical data YBF and YBF-L

Model	Suspension eyes top (T) and bottom (B)	Adjustment of spring tension V=vertical H=horizontal	Tapered rope drum	Manual drum lock	Automatic drum-locking device	Load indicator	Spring assembly enclosed	Closed body	Rope guide, nylon	Rope exchange without disassembly
YBF-01	T	H	•	–	–	–	–	•	–	–
YBF-02	T	H	•	–	–	–	–	•	–	–
YBF-03	T	H	•	–	–	–	–	•	–	–
YBF-05	T	H	•	–	–	–	–	•	–	–
YBF-09	T	H	•	•	•	•	•	•	•	•
YBF-15	T	H	•	•	•	•	•	•	•	•
YBF-22	T + B	V	•	•	•	•	•	•	•	•
YBF-30	T + B	V	•	•	•	•	•	•	•	•
YBF-40	T + B	V	•	•	•	•	•	•	•	•
YBF-50	T + B	V	•	•	•	•	•	•	•	•
YBF-60	T + B	V	•	•	•	•	•	•	•	•
YBF-70	T + B	V	•	•	•	•	•	•	•	•
YBF-85	T + B	V	•	•	•	–	•	•	•	•
YBF-100	T + B	V	•	•	•	–	•	•	•	•
YBF-120	T	H	•	•	•	–	•	•	•	–
YBF-140	T	H	•	•	•	–	•	•	•	–
YBF-170	T	H	•	•	•	–	•	•	•	–
YBF-200	T	H	•	•	•	–	•	•	•	–
YBF-03L	T	H	•	–	•	–	–	•	–	–
YBF-05L	T	H	•	–	•	–	–	•	–	–
YBF-09L	T	V	•	•	•	–	•	•	•	–
YBF-15L	T	V	•	•	•	–	•	•	•	–
YBF-22L	T	V	•	•	•	•	•	•	•	–
YBF-30L	T	V	•	•	•	•	•	•	•	–
YBF-40L	T + B	V	•	•	•	•	•	•	•	–
YBF-50L	T + B	V	•	•	•	•	•	•	•	–
YBF-60L	T + B	V	•	•	•	•	•	•	•	–
YBF-70L	T + B	V	•	•	•	•	•	•	•	–
YBF-85L	T + B	V	•	•	•	–	•	•	•	–
YBF-100L	T	H	•	•	•	–	•	•	•	–
YBF-120L	T	H	•	•	•	–	•	•	•	–
YBF-130L	T	H	•	•	•	–	•	•	•	–

Technical data YBA and YBA-L

Model	Suspension eyes top (T) and bottom (B)	Adjustment of spring tension V=vertical H=horizontal	Tapered rope drum	Manual drum lock	Automatic drum-locking device	Load indicator	Spring assembly enclosed	Closed body	Rope guide, nylon	Rope exchange without disassembly
YBA-15	T	V	•	•	•	•	•	•	•	•
YBA-22	T + B	V	•	•	•	•	•	•	•	•
YBA-30	T + B	V	•	•	•	•	•	•	•	•
YBA-40	T + B	V	•	•	•	•	•	•	•	•
YBA-50	T + B	V	•	•	•	•	•	•	•	•
YBA-60	T + B	V	•	•	•	•	•	•	•	•
YBA-70	T + B	V	•	•	•	•	•	•	•	•
YBA-15L	T + B	V	•	•	•	–	•	•	•	–
YBA-22L	T + B	V	•	•	•	•	•	•	•	–
YBA-30L	T + B	V	•	•	•	•	•	•	•	–
YBA-40L	T + B	V	•	•	•	•	•	•	•	–
YBA-50L	T + B	V	•	•	•	•	•	•	•	–
YBA-60L	T + B	V	•	•	•	•	•	•	•	–
YBA-70L	T + B	V	•	•	•	•	•	•	•	–

Technical data YBF and YBF-L

Model	Art.-No.	Capacity min. kg	Capacity max. kg	Working range m	Weight with rope kg
YBF-01	N08300001	0.5	1.5	1.0	1.0
YBF-02	N08300002	1	2	1.0	1.0
YBF-03	N08300003	1.5	3	1.3	1.8
YBF-05	N08300004	3	5	1.3	1.9
YBF-09	N08300007	4.5	9	1.3	4.0
YBF-15	N08300008	9	15	1.3	4.0
YBF-22	N08300009	15	22	1.5	8.0
YBF-30	N08300010	22	30	1.5	8.0
YBF-40	N08300011	30	40	1.5	10.5
YBF-50	N08300012	40	50	1.5	10.5
YBF-60	N08300013	50	60	1.5	11.0
YBF-70	N08300014	60	70	1.5	11.5
YBF-85	N08300015	70	85	1.5	12.0
YBF-100	N08300016	85	100	1.5	12.5
YBF-120	N08300017	100	120	1.5	28.0
YBF-140	N08300018	120	140	1.5	29.0
YBF-170	N08300019	140	170	1.5	35.0
YBF-200	N08300020	170	200	1.5	36.0
YBF-03L	N08300005	1.5	3	2.5	3.9
YBF-05L	N08300006	3	5	2.5	4.0
YBF-09L	N08300021	4.5	9	2.3	7.0
YBF-15L	N08300022	9	15	2.3	7.5
YBF-22L	N08300023	15	22	2.3	8.5
YBF-30L	N08300024	22	30	2.3	8.5
YBF-40L	N08300025	30	40	2.3	11.0
YBF-50L	N08300026	40	50	2.3	11.0
YBF-60L	N08300027	50	60	2.3	11.5
YBF-70L	N08300028	60	70	2.3	12.0
YBF-85L	N08300029	70	85	2.5	26.5
YBF-100L	N08300030	85	100	2.5	27.0
YBF-120L	N08300031	100	120	2.5	34.0
YBF-130L	N08300032	120	130	2.5	35.0

Technical data YBA and YBA-L

Model	Art.-No.	Capacity min. kg	Capacity max. kg	Working range m	Weight with rope kg
YBA-15	N08300033	9	15	1.3	5.5
YBA-22	N08300034	15	22	1.5	8.5
YBA-30	N08300035	22	30	1.5	9.0
YBA-40	N08300036	30	40	1.5	11.5
YBA-50	N08300037	40	50	1.5	12.0
YBA-60	N08300038	50	60	1.5	13.0
YBA-70	N08300039	60	70	1.5	13.5
YBA-15L	N08300040	9	15	2.3	8.5
YBA-22L	N08300041	15	22	2.3	9.0
YBA-30L	N08300042	22	30	2.3	9.5
YBA-40L	N08300043	30	40	2.3	12.0
YBA-50L	N08300044	40	50	2.3	12.5
YBA-60L	N08300045	50	60	2.3	13.5
YBA-70L	N08300046	60	70	2.3	14.0

Dimensions spring balancers body type I, body type II & body type III

Model	Body type I		Body type II			Body type III					
	YBF-01 YBF-02	YBF-03 YBF-05	YBF-09 YBF-15	YBF-03L YBF-05L	YBA-15	YBF-22 YBF-30	YBF-40 YBF-50	YBF-60 YBF-70 YBF-85 YBF-100	YBF-09L YBF-15L YBF-22L YBF-30L	YBF-40L YBF-50L	YBF-60L YBF-70L
A min., mm	315	290	340	375	340	445	440	440	445	440	440
A max., mm	1315	1590	1640	2875	1640	1945	1940	1940	2745	2740	2740
B, mm	132	148	174	197	174	218	220	220	218	220	220
C, mm	72	89	109	114	109	130	130	130	130	130	130
D, mm	68	78	95	105	95	111	111	111	111	111	111
E, mm	120	120	152	175	152	194	194	194	194	194	194
F, mm	22	25	15	23	15	35	35	35	35	35	35
G, mm	26	33	38	30	38	47	47	47	47	47	47
H, mm	10	10	12	12	12	15	17	17	15	17	17
I, mm	14	14	24	14	24	30	30	30	30	30	30
J, mm	9	9	14	14	14	18	18	18	18	18	18
K, mm	10	8	15	14	15	18	18	18	18	18	18
L, mm	17	14	18	17	18	24	24	24	24	24	24
M min., mm	45	45	39	65	39	46	46	46	46	46	46
M max., mm	65	75	68	105	68	83	83	83	83	83	83
N, mm	9	9	14	14	14	16	16	16	16	16	16
O, mm	6	6	9	8	9	12	14	14	12	14	14
P, mm	11	12	24	30	24	35	75	86	35	75	86
Q, mm	5	9	25	9	25	30	33	33	30	33	33
R, mm	30	32	72	45	94	80	105	116	80	105	116
S min., mm	20	35	65	55	87	72	97	97	72	97	97
S max., mm	38	50	99	85	121	112	137	137	112	137	137
T, mm	49	69	136	110	148	158	188	199	158	188	199
U, mm	–	–	–	–	–	130	130	130	130	130	130

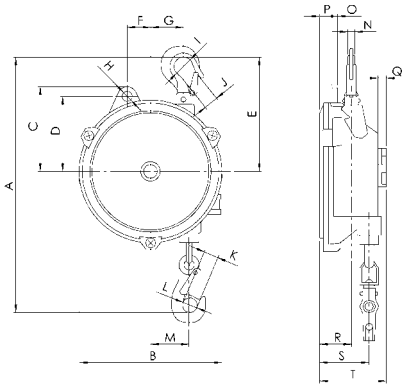

Body type I

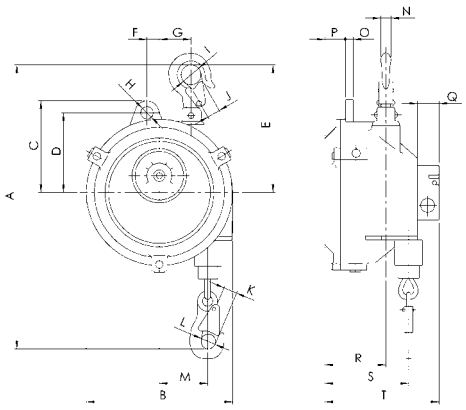

Body type II

Dimensions spring balancers body type IV & body type V

Model	Body type IV				Body type V					
	YBF-120 YBF-140	YBF-170 YBF-200	YBF-85L YBF-100L	YBF-120L YBF-130L	YBA-22 YBA-30	YBA-40 YBA-50	YBA-60 YBA-70	YBA-15L YBA-22L YBA-30L	YBA-40L YBA-50L	YBA-60L YBA-70L
A min., mm	550	550	550	550	445	440	440	445	440	440
A max., mm	2050	2050	3050	3050	1945	1940	1940	2745	2740	2740
B, mm	247	247	247	247	218	220	220	218	220	220
C, mm	156	156	156	156	130	130	130	130	130	130
D, mm	128	128	128	128	111	111	111	111	111	111
E, mm	265	265	265	265	194	194	194	194	194	194
F, mm	40	40	40	40	35	35	35	35	35	35
G, mm	65	65	65	65	47	47	47	47	47	47
H, mm	17	17	17	17	15	17	17	15	17	17
I, mm	26	26	26	26	30	30	30	30	30	30
J, mm	15	15	15	15	18	18	18	18	18	18
K, mm	24	24	24	24	18	18	18	18	18	18
L, mm	27	27	27	27	24	24	24	24	24	24
M min., mm	54	54	54	54	46	46	46	46	46	46
M max., mm	95	95	95	95	83	83	83	83	83	83
N, mm	18	18	18	18	16	16	16	16	16	16
O, mm	16	16	16	16	12	14	14	12	14	14
P, mm	142	185	142	185	55	95	105	55	95	105
Q, mm	37	37	37	37	30	33	33	30	33	33
R, mm	155	193	155	193	115	140	140	115	140	140
S min., mm	175	215	175	215	107	132	132	107	132	132
S max., mm	205	248	205	248	147	172	172	147	172	172
T, mm	268	268	268	310	180	208	218	180	208	218
U, mm	156	156	156	156	130	130	130	130	130	130

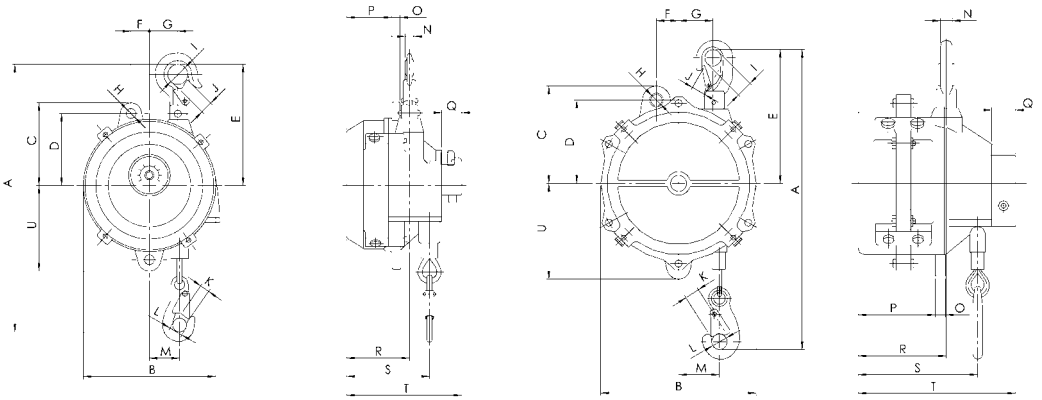

Body type III
Body type V

Body type IV

INFO

Yale hoists and trolleys are not designed for passenger elevation applications and must not be used for this purpose.

Textile Lifting Slings

Yale webbing slings and round slings are produced from high-tensile quality polyester (PES) in accordance with EN 1492, parts 1 and 2. The highly flexible and versatile material exerts evenly distributed pressure on pressure-sensitive and tension-sensitive loads; it is not subject to material ageing or brittleness and is heat-resistant up to +100°C.

Table of contents

	Page
Round slings	248 - 253
Round sling assembly	253 - 255
Webbing slings	256 - 260
Gas cylinder transport harnesses	287
Textile lifting slings accessories	261 - 264

Lashing Systems

Yale lashing belts are produced from polyester (PES) according to EN 12195-2. The extremely resilient belt material is resistant to stretching and abrasion; it guarantees a high load bearing capacity and a long service life. All Yale lashing belts are stretched belts, thermally fixed and protected against abrasion.

	Page
Trucker-Set	265
Textile lashings	270 - 277
Special textile lashings	277
Lashing systems accessories	278 - 281

Entertainment

Yale Entertainment accessories are specially manufactured to meet the high demands of this segment.
The highly flexible and adaptable material exerts an even pressure distribution on pressure- and tension-sensitive loads, shows no material ageing or embrittlement and is heat-resistant up to +100 °C.

	Page
Round slings	282 - 283
Entertainment accessories	283
Theater load belts	284
Textile lashings	284 - 286

INFO

Please note our user instructions at the beginning of each chapter

Yale

TEXTILE LIFTING SLINGS

INFO

This user information presents a general overview regarding the application of textile lifting slings and does not substitute the existing operating instructions for specific products!

Lifting operations with textile slings may be carried out by competent users (trained in theory and practice) only.

When operated correctly, our textile slings offer the highest degree of safety in line with long life expectancy and avoid damage to products and people.

Limitations of use

Loading

Textile lifting slings must not be overloaded. The capacities for the most important lifting/slinging methods are indicated on the identity label. Always observe the maximum angle from the vertical (angle β)!

Temperature

Textile lifting slings made from polyester are admitted for applications at temperatures between -40°C and +100°C. This temperature area may change in chemical environments. The woven structure of the drenched textiles at temperatures below 0°C are susceptible to damage due to the formation of ice.

Ice will reduce the flexibility of the lifting sling! At temperatures below 0°C, dry lifting equipment should be used only! In dry condition, polyester features a high electrical resistance and provides an insulating effect between load and crane hook (e.g. during welding jobs – observe temperatures!).

Shock loading

Textile lifting and lashing equipment should not be subjected to sharp jerks and jolts in order to avoid heavy forces which may be considerably higher than the actual load weight!

Chemicals

Particular caution is required when using textile lifting equipment in areas where chemicals are present. Polyester has good resistance against mineral acids but will be destroyed by alkaline – consult our experts for advice in your specific application!

Acid may cause material brittleness to steel fittings of textile lifting slings! Harmless acid solutions may concentrate by evaporation to an extent that they provoke damages. Affected textile lifting equipment must be thoroughly rinsed in cold water, dried in open air and inspected by a competent person.

Transport of people

Transport of people with textile lifting equipment is generally forbidden!

Operation in danger zones

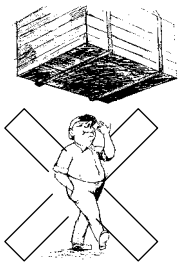

Lifting or transport of loads must be avoided while personnel are in the danger zone.

People are not allowed to pass over or under a suspended load!

Application advices

- The operator may start moving the load only after it has been correctly attached and all personnel are clear of the danger zone.
- Loads must not be left unattended in raised or tensioned condition for a longer period of time.
- Flat webbing or round slings must not be used in knotted, tied or twisted condition and may only be used for the attachment of loads.
- Prior to every use, textile lifting and lashing equipment must be examined with regard to obvious defects. Ensure that their identity and dimensions are correct and that they are provided with a legible capacity label. Never use lifting equipment which is defective or not labelled!
- Damage of the capacity label can be avoided by keeping it away from the load, the hook or choke hitch operations!
- The angle of the eye must not exceed 20° in order to avoid inadmissible strain on the seams! This will be ensured when the eye length is approx. 4 times the width of the hook.

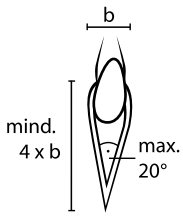

- Hooks or other lifting devices in loaded condition must not be attached in the area of sewn overlaps or at the seam of the round sling sleeve. Make sure that the seams are positioned in the straight part of the lifting device!

- Hooks should be provided with sufficient radius. The contact area of the web sling must be straight, so that the entire cross section of the sling is loaded equally. If the carrying width of flat webbing sling is below 75 mm, the radius curve of the lifting device must be at least ¾ of the width of the webbing sling.

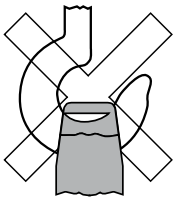

- Take care that round slings do not overlap in the crane hook. They must have sufficient space in the hook mouth as well as at the load, so they can assume their natural, flattened profile and provide even loading over the full width of the round sling.
- Flat webbing slings should be applied in such a way that they can carry the load over the full sling width. Greater angles from the vertical will strain the edges of the slings and possibly lead to breakage!
- Textile lashing equipment must be protected against sharp edges, friction and abrasion at both load and lifting device. A radius edge is classed as sharp, if it is less than the thickness of the flat webbing or round sling (in flat, loaded condition).
- Never push or place the load onto the lifting device! Never pull the load over rough surfaces or edges and do not drag from underneath a load!
- In “choke hitch” the textile sling should be positioned so that it can form a natural angle of 60° and that heat due to friction is avoided. Never re-adjust the choke hitch and prevent heat development by friction (slipping of load). In order to lift loads with plain or slippery surface we recommend double choke hitch.

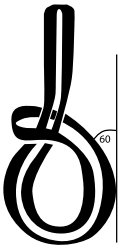

- Round slings and flat webbing slings will stretch under load by approx. 3 - 5 %. This has to be strictly considered as it may cause abrasion resp. damages at sensible surfaces. As prevention we recommend the use of protective sleeves and edge protectors. In case of (intended) load movements during lifting operations and resulting friction, e.g. during assembling or turning of goods, the surface or edges of the load must be secured by protective sleeves or corner protectors, which will safeguard the lashing device and leave sufficient space for movement and alignment without greater friction (see dim. B in the following drawing)

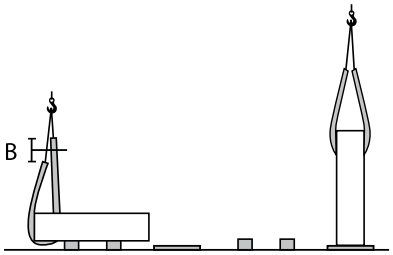

- If more than one sling is used to lift a load, these should be of same type with preferably same length in order to avoid different elongation behaviour and allow carrying ability over the full width (employ smallest angle from the vertical or use spreader beam instead).
- Textile lifting equipment must be stored in a clean, dry and well ventilated area. Avoid exposure to direct sunlight and other sources of UV. Keep them away from other heat sources, chemicals, fumes and corroded surfaces as they will have a negative effect on the life expectancy of the sling. Slings should not be dried near open fires or other hot places.
- Textile slings with obvious damages, overloading or other detrimental influences must be taken out of use and may be returned to service after inspection and possible repair only.

INFO

You will find the General Terms and Conditions at the end of the catalogue.

Please note the information on our training courses on page 4.

INFO

Maintenance and repair

Inspections and tests must be performed by competent persons or specialist workshops only.

Inspections

Depending on application, textile lifting equipment must be subjected to regular inspections by competent persons, at least once per year. The inspection must be visual and extended to the following deficiencies:

- Complete and legible identity label
- Damages by chemical influence, e.g. local soaking, chipping of yarns or heat (hardening)
- Steel links must not show deformations, grooves or reduction to the cross section of more than 10%. Check for cracks; possible welding points must be visible and not covered by the webbing
- Inspections have to be recorded
- Defective slings have to be taken out of service immediately and must be stored separately!

Criteria for disposal

Textile slings must not be used any longer if e.g. :

- The marking (identity label) is missing or illegible.
- Detrimental impacts have occurred, e.g. overloading, shock loading, chemical influence or heat.

Flat webbing slings:

- Damages of selvage, defects of the woven structure by abrasion, cuts or yarn breakages have occured. If 10% or more of the webbing sling cross section is damaged the sling must be discarded.
- Heavy deformation or melting of yarns due to heat (shiny surface and/or hardened webbing) can be recognized.
- Load bearing seams are defective.

Round slings:

- The outside (sleeve) is damaged by cuts or abrasion.
- The inside (polyester yarns) of the sling is visible.
- The seams of the sleeve are damaged.

INFO

Yale hoists and trolleys are not designed for passenger elevation applications and must not be used for this purpose.

Webbing slings Rated capacities for different slinging methods

		WLL (kg) with one webbing sling					WLL (kg) with two webbing slings			
		straight pull	choke hitch	basket angle β			straight angle β		choke hitch angle β	
				up to 7°	7°- 45°	45°- 60°	7°- 45°	45°- 60°	7°- 45°	45°- 60°
									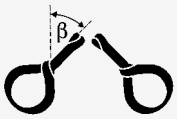	
Factor		1.0	0.8	2.0	1.4	1.0	1.4	1.0	1.12	0.8
1000 kg	violet	1000	800	2000	1400	1000	1400	1000	1120	800
2000 kg	green	2000	1600	4000	2800	2000	2800	2000	2240	1600
3000 kg	yellow	3000	2400	6000	4200	3000	4200	3000	3360	2400
4000 kg	grey	4000	3200	8000	5600	4000	5600	4000	4480	3200
5000 kg	red	5000	4000	10000	7000	5000	7000	5000	5600	4000
6000 kg	brown	6000	4800	12000	8400	6000	8400	6000	6720	4800
8000 kg	blue	8000	6400	16000	11200	8000	11200	8000	8960	6400
10000 kg	orange	10000	8000	20000	14000	10000	14000	10000	11200	8000

Round slings Rated capacities for different slinging methods

		WLL (kg) with one round sling							WLL (kg) with two round slings			
		straight pull	choke hitch	basket angle β					straight angle β		choke hitch angle β	
				up to 7°	7°- 45°	45°- 60°	7°- 45°	45°- 60°	7°- 45°	45°- 60°	7°- 45°	45°- 60°
											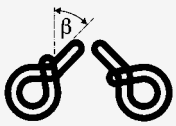	
Factor		1.0	0.8	2.0	1.4	1.0	0.7	0.5	1.4	1.0	1.12	0.8
1000 kg	violet	1000	800	2000	1400	1000	700	500	1400	1000	1120	800
2000 kg	green	2000	1600	4000	2800	2000	1400	1000	2800	2000	2240	1600
3000 kg	yellow	3000	2400	6000	4200	3000	2100	1500	4200	3000	3360	2400
4000 kg	grey	4000	3200	8000	5600	4000	2800	2000	5600	4000	4480	3200
5000 kg	rot	5000	4000	10000	7000	5000	3500	2500	7000	5000	5600	4000
6000 kg	brown	6000	4800	12000	8400	6000	4200	3000	8400	6000	6720	4800
8000 kg	blue	8000	6400	16000	11200	8000	5600	4000	11200	8000	8960	6400
10000 kg	orange	10000	8000	20000	14000	10000	7000	5000	14000	10000	11200	8000

RSD
Round sling with duplex sleeve

Made from polyester (PES), EN 1492-2 with double stitch-less protection sleeve, with capacity label.

Features

- With double protection sleeve, PU-starched, thermally fixed.
- Colour coding of the protective sleeve.
- Printed-on capacities.
- Woven tonnage stripes, per ton capacity 1 stripe.
- Low weight allows easy handling.
- Protection against hand injuries.
- Protection against cargo surface damage.
- Highly flexible and adaptable to given shapes.
- UV-resistant, eliminating material ageing or embrittlement.
- Heat resistant up to +100°C.
- Moisture-resistant fabric, thus preventing frost damage (up to approx. -40°C).

Technical data RSD

Model	Colour code EN 1492	Capacity WLL, with one sling, straight pull kg	Capacity WLL, with one sling, choke hitch kg	Capacity WLL, with one sling, basket, angle β up to 7° kg	Capacity WLL, with one sling, basket, angle β 7°- 45° kg	Capacity WLL, with one sling, basket, angle β 45°- 60° kg	Width approx. under load mm	Thickness approx. under load mm	Shortest possible length mm
RSD-01000	violet	1000	800	2000	1400	1000	52	5	500
RSD-02000	green	2000	1600	4000	2800	2000	57	6	500
RSD-03000	yellow	3000	2400	6000	4200	3000	71	9	500
RSD-04000	grey	4000	3200	8000	5600	4000	76	9	500

RSX
Round sling with extra thick single sleeve

Made from polyester (PES), EN 1492-2 with extra strong stitchless protection sleeve, with capacity label.

Features

- Optimized woven structure, PU-starched, thermally fixed.
- Easy identification of the annually required UVV tests through an additional label showing a check list.
- Colour coding of the protective sleeve.
- Printed-on capacities.
- Woven tonnage stripes, per ton capacity 1 stripe.
- Low weight allows easy handling.
- Protection against hand injuries.
- Protection against cargo surface damage.
- Highly flexible and adaptable to given shapes.
- UV-resistant, eliminating material ageing or embrittlement.
- Heat resistant up to +100°C.
- Moisture-resistant fabric, thus preventing frost damage (up to approx. -40°C).

INFO

Special lengths available on request.

Technical data RSX

Model	Colour code EN 1492	Capacity WLL, with one sling, straight pull kg	Capacity WLL, with one sling, choke hitch kg	Capacity WLL, with one sling, basket, angle β up to 7° kg	Capacity WLL, with one sling, basket, angle β 7°- 45° kg	Capacity WLL, with one sling, basket, angle β 45°- 60° kg	Width approx. under load mm	Thickness approx. under load mm	Shortest possible length mm
RSX-01000	violet	1000	800	2000	1400	1000	52	10	500
RSX-02000	green	2000	1600	4000	2800	2000	57	10	500
RSX-03000	yellow	3000	2400	6000	4200	3000	71	15	500
RSX-04000	grey	4000	3200	8000	5600	4000	76	15	500
RSX-05000	red	5000	4000	10000	7000	5000	86	20	1000
RSX-06000	brown	6000	4800	12000	8400	6000	96	20	1000
RSX-08000	blue	8000	6400	16000	11200	8000	112	25	1000
RSX-10000	orange	10000	8000	20000	14000	10000	130	30	1000

RSX-XL
Heavy duty round sling with extra thick single sleeve

Made from polyester (PES), EN 1492-2 with extra strong stitchless protection sleeve, with capacity label.

Features

- Optimized woven structure, PU-starched, thermally fixed.
- Easy identification of the annually required UVV tests through an additional label showing a check list.
- Colour coding of the protective sleeve.
- Low weight allows easy handling.
- Protection against hand injuries.
- Protection against cargo surface damage.
- Highly flexible and adaptable to given shapes.
- UV-resistant, eliminating material ageing or embrittlement.
- Heat resistant up to +100°C.
- Moisture-resistant fabric, thus preventing frost damage (up to approx. -40°C).

Technical data RSX-XL

Model	Colour code EN 1492	Capacity WLL, with one sling, straight pull kg	Capacity WLL, with one sling, choke hitch kg	Capacity WLL, with one sling, basket, angle β up to 7° kg	Capacity WLL, with one sling, basket, angle β 7°- 45° kg	Capacity WLL, with one sling, basket, angle β 45°- 60° kg	Width approx. under load mm	Shortest possible length mm
RSX-XL-12000	orange	12000	9600	24000	16800	12000	150	1000
RSX-XL-15000	orange	15000	12000	30000	21000	15000	150	1000
RSX-XL-20000	orange	20000	16000	40000	28000	20000	180	1000
RSX-XL-25000	orange	25000	20000	50000	35000	25000	180	1000
RSX-XL-30000	orange	30000	24000	60000	42000	30000	210	1000
RSX-XL-40000	orange	40000	32000	80000	56000	40000	210	1000
RSX-XL-50000	orange	50000	40000	100000	70000	50000	240	1000
RSX-XL-60000	orange	60000	48000	120000	84000	60000	240	1000
RSX-XL-80000	orange	80000	64000	160000	112000	80000	270	1500
RSX-XL-100000	orange	100000	80000	200000	140000	100000	270	1500
RSX-XL-125000	orange	125000	100000	250000	175000	125000	270	2000
RSX-XL-150000	orange	150000	120000	300000	210000	150000	270	2000

RSE
Round sling with single sleeve

Made from polyester (PES), EN 1492-2 with single stitch-less protection sleeve, with capacity label.

Features

- With single sleeve, PU-starched, thermally fixed.
- Colour coding of the protective sleeve.
- Printed-on capacities.
- Woven tonnage stripes, per ton capacity 1 stripe (applies only to round slings up to 10 t).
- Low weight allows easy handling.
- Protection against hand injuries.
- Protection against cargo surface damage.
- Highly flexible and adaptable to given shapes.
- UV-resistant, eliminating material ageing or embrittlement.
- Heat resistant up to +100 °C.
- Moisture-resistant fabric, thus preventing frost damage (up to approx. -40 °C).

Technical data RSE

Model	Colour code EN 1492	Capacity WLL, with one sling, straight pull kg	Capacity WLL, with one sling, choke hitch kg	Capacity WLL, with one sling, basket, angle β up to 7° kg	Capacity WLL, with one sling, basket, angle β 7°- 45° kg	Capacity WLL, with one sling, basket, angle β 45°- 60° kg	Width approx. under load mm	Thickness approx. under load mm	Shortest possible length mm
RSE-01000	violet	1000	800	2000	1400	1000	50	10	500
RSE-02000	green	2000	1600	4000	2800	2000	55	10	500
RSE-03000	yellow	3000	2400	6000	4200	3000	60	15	500
RSE-04000	grey	4000	3200	8000	5600	4000	75	15	500
RSE-05000	red	5000	4000	10000	7000	5000	85	20	1000
RSE-06000	brown	6000	4800	12000	8400	6000	90	20	1000
RSE-08000	blue	8000	6400	16000	11200	8000	100	25	1000
RSE-10000	orange	10000	8000	20000	14000	10000	120	30	1000

20 RSE - Round slings, EN 1492-2

with different working loads and lengths.

With each sports bag you receive:

2 x **RSE 01000**, WLL 1000 kg, 0.5 m length
4 x **RSE 01000**, WLL 1000 kg, 1.0 m length
2 x **RSE 01000**, WLL 1000 kg, 1.5 m length
4 x **RSE 01000**, WLL 1000 kg, 2.0 m length
2 x **RSE 02000**, WLL 2000 kg, 1.0 m length
2 x **RSE 02000**, WLL 2000 kg, 2.0 m length
2 x **RSE 02000**, WLL 2000 kg, 3.0 m length
2 x **RSE 03000**, WLL 3000 kg, 2.0 m length

Art.-No.: N33500011

Minimum purchase: 3 bags

Including sports bag

Round sling assembly

Rated capacities for different slinging methods

	single legged		double legged				three and four legged	
	straight	choke hitch	straight	choke hitch	straight	choke hitch	straight	
			angle β 0°- 45°		angle β 45°- 60°		angle β 0°- 45°	angle β 45°- 60°
Factor	1.0	0.8	1.4	1.1	1.0	0.8	2.1	1.5
1000 kg	1000	800	1400	1100	1000	800	2100	1500
2000 kg	2000	1600	2800	2200	2000	1600	4200	3000
3000 kg	3000	2400	4200	3300	3000	2400	6300	4500
4000 kg	4000	3200	5600	4400	4000	3200	8400	6000
5000 kg	5000	4000	7000	5500	5000	4000	10500	7500

RSG
Round sling assembly single legged

EN 1492-2 with high tensile forgings EN 1677.

Technical data RSG single legged

Model	Capacity WLL straight pull kg
RSG-01000-1-SIKA	1000
RSG-02000-1-SIKA	2000
RSG-03000-1-SIKA	3000
RSG-04000-1-SIKA	4000
RSG-05000-1-SIKA	5000

RSG
Round sling assembly double legged

EN 1492-2 with high tensile forgings EN 1677.

Technical data RSG double legged

Model	Capacity WLL, straight angle β 0°- 45° kg	Capacity WLL, straight angle β 45°- 60° kg
RSG-01000-2-SIKA	1400	1000
RSG-02000-2-SIKA	2800	2000
RSG-03000-2-SIKA	4200	3000
RSG-04000-2-SIKA	5600	4000
RSG-05000-2-SIKA	7000	5000

INFO

Standard length 1-3 m. Attention: The mentioned lengths refer to the useable length L1 of the round sling.

RSG
Round sling assembly three legged

EN 1492-2 with high tensile forgings EN 1677.

Technical data RSG three legged

Model	Capacity WLL, straight angle β 0°- 45° kg	Capacity WLL, straight angle β 45°- 60° kg
RSG-01000-3-SIKA	2100	1500
RSG-02000-3-SIKA	4200	3000
RSG-03000-3-SIKA	6300	4500
RSG-04000-3-SIKA	8400	6000
RSG-05000-3-SIKA	10500	7500

RSG
Round sling assembly four legged

EN 1492-2 with high tensile forgings EN 1677.

Technical data RSG four legged

Model	Capacity WLL, straight angle β 0°- 45° kg	Capacity WLL, straight angle β 45°- 60° kg
RSG-01000-4-SIKA	2100	1500
RSG-02000-4-SIKA	4200	3000
RSG-03000-4-SIKA	6300	4500
RSG-04000-4-SIKA	8400	6000
RSG-05000-4-SIKA	10500	7500

INFO

Other lengths and capacities upon request.

HSE
Endless flat webbing sling, single ply

Made from polyester (PES), EN 1492-1 form A2, with capacity label.

Features

- Single ply, PU-starched, thermally fixed.
- Colour coded webbing.
- Woven tonnage stripes.
- Low weight allows easy handling.
- Protection against hand injuries.
- Protection against cargo surface damage.
- Consistent pressure distribution onto pressure- and pull sensitive loads.
- UV-resistant, eliminating material ageing or embrittlement.
- Heat resistant up to +100 °C.
- Moisture-resistant fabric, thus preventing frost damage (up to approx. -40 °C).
- Low elongation (< 4 %).

Technical data HSE

Model	Colour code EN 1492	Capacity WLL, with one sling, straight pull kg	Capacity WLL, with one sling, choke hitch kg	Capacity WLL, with one sling, basket, angle β up to 7° kg	Capacity WLL, with one sling, basket, angle β 7°- 45° kg	Capacity WLL, with one sling, basket, angle β 45°- 60° kg	Webbing width mm	Shortest possible length mm
HSE-01000	violet	1000	800	2000	1400	1000	30	500
HSE-02000	green	2000	1600	4000	2800	2000	60	500
HSE-03000	yellow	3000	2400	6000	4200	3000	90	500

INFO

Further capacities (up to 20 t) and special lengths available on request.

HSE-E Einwegband
Disposable endless flat woven webbing slings, single ply

Made from polyester (PES), DIN 60005, with capacity label.

Features

- Single ply, PU-starched, thermally fixed.
- Low weight allows easy handling.
- Protection against hand injuries.
- Protection against cargo surface damage.
- Consistent pressure distribution onto pressure- and pull sensitive loads.
- UV-resistant, eliminating material ageing or embrittlement.
- Heat resistant up to +100°C.
- Moisture-resistant fabric, thus preventing frost damage (up to approx. -40°C).
- Low elongation (<4%).

INFO

Min. order quantity: 100 pcs. per product code

Technical data HSE-E

Model	Capacity WLL, with one sling, straight pull kg	Capacity WLL, with one sling, choke hitch kg	Capacity WLL, with one sling, basket, angle β up to 7° kg	Capacity WLL, with one sling, basket, angle β 7°- 45° kg	Capacity WLL, with one sling, basket, angle β 45°- 60° kg	Webbing width mm	Shortest possible length mm
HSE-E-00500	500	400	1000	700	500	25	200
HSE-E-00750	750	600	1500	1050	750	48	200
HSE-E-01000	1000	800	2000	1400	1000	35	200
HSE-E-01500	1500	1200	3000	2100	1500	50	250

HBD
Flat webbing sling, duplex construction, reinforced eyes

Made from polyester (PES), EN 1492-1 form B2, with capacity label.

Features

- Duplex construction, PU-starched, thermally fixed.
- With reinforced eyes.
- Woven tonnage stripes (up to WLL 10 t).
- Low weight allows easy handling.
- Protection against hand injuries.
- Protection against cargo surface damage.
- Consistent pressure distribution onto pressure- and pull sensitive loads.
- UV-resistant, eliminating material ageing or embrittlement.
- Heat resistant up to +100 °C.
- Moisture-resistant fabric, thus preventing frost damage (up to approx. -40 °C).
- Low elongation (< 4 %).

INFO

Special lengths available on request.

Technical data HBD

Model	Colour code EN 1492	Capacity WLL, with one sling, straight pull kg	Capacity WLL, with one sling, choke hitch kg	Capacity WLL, einfach umgelegt angle β up to 7° kg	Capacity WLL, einfach umgelegt angle β 7°- 45° kg	Capacity WLL, einfach umgelegt angle β 45°- 60° kg	Webbing width mm	Eye length approx. mm	Eye width approx. mm	Shortest possible length mm
HBD-01000	violet	1000	800	2000	1400	1000	30	300	30	750
HBD-02000	green	2000	1600	4000	2800	2000	60	350	30	1000
HBD-03000	yellow	3000	2400	6000	4200	3000	90	400	45	1000
HBD-04000	grey	4000	3200	8000	5600	4000	120	500	60	1500
HBD-05000	red	5000	4000	10000	7000	5000	150	550	75	1500
HBD-06000	brown	6000	4800	12000	8400	6000	180	600	90	2000
HBD-08000	blue	8000	6400	16000	11200	8000	240	650	120	2500
HBD-10000	orange	10000	8000	20000	14000	10000	300	900	150	2500
HBD-12000	orange	12000	9600	24000	16800	12000	300	900	150	3000
HBD-15000	orange	15000	12000	30000	21000	15000	400	1100	200	4000

HBQ
Flat webbing sling, four ply, reinforced eyes

Made from polyester (PES), EN 1492-1 form B4, with capacity label.

Features

- Four-layed stitched, PU-starched, thermally fixed.
- With reinforced eyes.
- Low weight allows easy handling.
- Protection against hand injuries.
- Protection against cargo surface damage.
- Consistent pressure distribution onto pressure- and pull sensitive loads.
- UV-resistant, eliminating material ageing or embrittlement.
- Heat resistant up to +100 °C.
- Moisture-resistant fabric, thus preventing frost damage (up to approx. -40 °C).
- Low elongation (< 4 %).

INFO

Other capacities upon request.

Technical data HBQ

Model	Capacity WLL, with one sling, straight pull kg	Capacity WLL, with one sling, choke hitch kg	Capacity WLL, with one sling, basket, angle β up to 7° kg	Capacity WLL, with one sling, basket, angle β 7°- 45° kg	Capacity WLL, with one sling, basket, angle β 45°- 60° kg	Webbing width mm	Eye length approx. mm	Eye width approx. mm	Shortest possible length mm
HBQ-04000	4000	3200	8000	5600	4000	60	350	30	1000
HBQ-06000	6000	4800	12000	8400	6000	90	400	45	1000
HBQ-08000	8000	6400	16000	11200	8000	120	500	60	1500
HBQ-10000	10000	8000	20000	14000	10000	150	550	75	1500
HBQ-12000	12000	9600	24000	16800	12000	180	600	90	2000
HBQ-16000	16000	12800	32000	22400	16000	240	650	120	2500
HBQ-20000	20000	16000	40000	28000	20000	300	900	150	2500
HBQ-25000	25000	20000	50000	35000	25000	300	900	150	3000
HBQ-30000	30000	24000	60000	42000	30000	400	1100	200	4000

HBD-ED
Webbing sling, duplex construction, steel links on both ends

Made from polyester (PES), EN 1492-1 form Cr2, with capacity label.

Features

- Duplex construction, PU-starched, thermally fixed.
- With reevable steel links.
- Woven tonnage stripes.
- Protection against hand injuries.
- Protection against cargo surface damage.
- Consistent pressure distribution onto pressure- and pull sensitive loads.
- UV-resistant, eliminating material ageing or embrittlement.
- Heat resistant up to +100°C.
- Moisture-resistant fabric, thus preventing frost damage (up to approx. -40°C).
- Low elongation (< 4 %).

INFO

HBD-ED - links are reevable, webbing sling also applicable for use in choke hitch.

Technical data HBD-ED

Model	Colour code EN 1492	Capacity WLL, with one sling, straight pull kg	Capacity WLL, with one sling, choke hitch kg	Capacity WLL, with one sling, basket, angle β up to 7° kg	Capacity WLL, with one sling, basket, angle β 7°- 45° kg	Capacity WLL, with one sling, basket, angle β 45°- 60° kg	For webbing width mm	Link dimension **HBD-ED** b x d x t mm
HBD-01000-ED	violet	1000	800	2000	1400	1000	30	40 x 13 x 80
HBD-02000-ED	green	2000	1600	4000	2800	2000	60	75 x 16 x 125
HBD-03000-ED	yellow	3000	2400	6000	4200	3000	90	105 x 20 x 165
HBD-04000-ED	grey	4000	3200	8000	5600	4000	120	135 x 23 x 210

INFO

Other capacities upon request.

PU-SC
PU-protection sleeve, single and double-sided

Made from cut resistant polyurethane

With inner fabric insert to ease sliding of the sleeve on the webbing. Standard length 2 and 4 m.

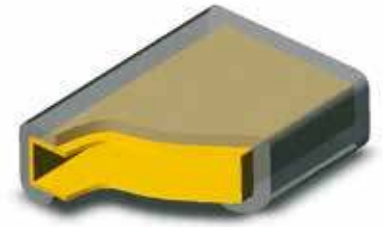

PU-protection sleeve single-sided, PU-SC-1

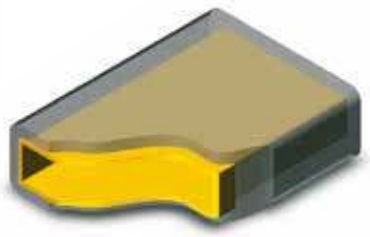

PU-protection sleeve double-sided, PU-SC-2

INFO

Minimum lenght 1 m. Lengths over 4 m on request.

Technical data PU-SC, single-sided

Model	Art.-No.	For webbing width mm	Dimensions outside/inside mm	Height mm
PU-SC1-030	N39120011	30	50/40	22
PU-SC1-050	N39120001	50	70/60	22
PU-SC1-060	N39120002	60	80/70	22
PU-SC1-090	N39120004	90	110/100	22
PU-SC1-120	N39120012	120	145/135	22
PU-SC1-150	N39120007	150	170/160	22
PU-SC1-180	N39120008	180	200/190	22
PU-SC1-240	N39120009	240	260/250	31
PU-SC1-300	N39120010	300	330/320	31

Technical data PU-SC, double-sided

Model	Art.-No.	For webbing width mm	Dimensions outside/inside mm	Height mm
PU-SC2-030	N39130014	30	50/40	22
PU-SC2-050	N39130001	50	70/60	22
PU-SC2-060	N39130002	60	80/70	22
PU-SC2-090	N39130004	90	110/100	22
PU-SC2-120	N39130007	120	145/135	22
PU-SC2-150	N39130009	150	170/160	22
PU-SC2-180	N39130011	180	200/190	22
PU-SC2-240	N39130012	240	260/250	31
PU-SC2-300	N39130013	300	330/320	31

INFO

Double PU sleeves cannot be fitted subsequently on webbing slings with steel links. If required, state sleeve length when placing the webbing sling order.

PU-KSW
PU-edge protector

Made from cut resistant polyurethane

With slots to allow easy attachment and fixing on the round sling.

Technical data PU-KSW

Model	Art.-No.	Diameter mm	Length mm	Suitable for round slings up to WLL kg
PU-KSW-30	N39160006	30	80	3000
PU-KSW-50	N39160007	50	125	5000

PU-SG
Round sleeve

With fabric insert and PU-coating

Economical solution to protect webbing slings and round slings against wear caused by abrasion.

INFO

Not suitable for protection against sharp edges.

Technical data PU-SG

Model	Art.-No.	Width approx. mm	Diameter mm	Suitable for round slings up to WLL kg
PU-SG-040	N39140001	60	40	2000
PU-SG-052	N39140002	80	52	3000
PU-SG-075	N39140003	115	75	6000
PU-SG-090	N39140004	140	90	8000
PU-SG-110	N39140005	170	110	10000
PU-SG-150	N39140006	230	150	15000

PU-KSE-MAG
Edge protection profile with magnets

From colour coded polyurethane, extremely abrasive and cut resistant.

Technical data PU-KSE-MAG

Model	Art.-No.	Colour mm	For webbing width mm	Width mm	Number of magnets
PU-KSE-065-MAG	N39160029	green	60	100	2
PU-KSE-100-MAG	N39160030	yellow	90	135	4
PU-KSE-125-MAG	N39160031	grey	120	160	4
PU-KSE-150-MAG	N39160032	red	150	185	4
PU-KSE-200-MAG	N39160033	black	180	225	6
PU-KSE-300-MAG	N39160034	orange	300	330	8

PU-KSE
Edge protection profile

From colour coded polyurethane, extremely abrasive and cut resistant.

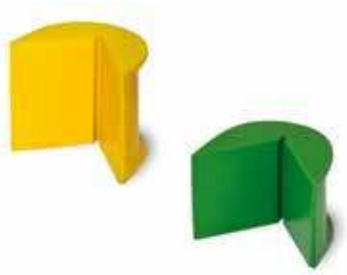

Technical data PU-KSE

Model	Art.-No.	Colour mm	For webbing width mm	Width mm
PU-KSE-065	N39160023	green	60	100
PU-KSE-100	N39160024	yellow	90	135
PU-KSE-125	N39160025	grey	120	160
PU-KSE-150	N39160026	red	150	185
PU-KSE-200	N39160027	black	180	225
PU-KSE-300	N39160028	orange	300	330

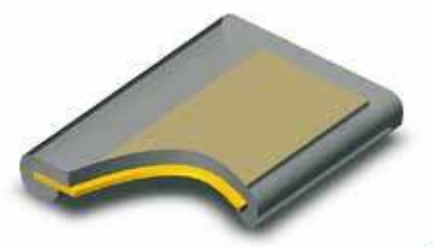

Coating single-sided,
PU-FB 1

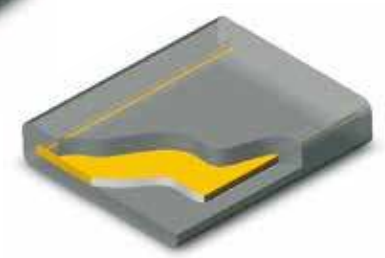

Coating double-sided,
PU-FB 2

PU-FB
PU-coating, single and double-sided

Made from transparent polyurethane

Extremely wear and cut resistant. The coating is permanently fixed to the webbing and cannot be lost during usage.

Technical data PU-FB, single-sided

Model	Art.-No.	For webbing width mm	Width mm
PU-FB1-030	N39100009	30	40
PU-FB1-050	N39100001	50	60
PU-FB1-060	N39100002	60	70
PU-FB1-090	N39100003	90	100
PU-FB1-120	N39100004	120	130
PU-FB1-150	N39100005	150	160
PU-FB1-180	N39100006	180	190
PU-FB1-240	N39100007	240	250
PU-FB1-300	N39100008	300	310

Technical data PU-FB, double-sided

Model	Art.-No.	For webbing width mm	Width mm
PU-FB2-030	N39110009	30	40
PU-FB2-050	N39110001	50	60
PU-FB2-060	N39110002	60	70
PU-FB2-090	N39110003	90	100
PU-FB2-120	N39110004	120	130
PU-FB2-150	N39110005	150	160
PU-FB2-180	N39110006	180	190
PU-FB2-240	N39110007	240	250
PU-FB2-300	N39110008	300	310

Trucker Set

With each sport bag you receive:

2 x Ratchet lashing, LC 250 daN, 25 mm, one-part, L=4.0 m
2 x Ratchet lashing, LC 1000 daN, 35 mm, one-part, L=6.0 m
2 x Ratchet lashing, LC 250 daN, 25 mm, two-part, double J hook, L=4.0 m
2 x Ratchet lashing, LC 1000 daN, 35 mm, two-part, double J hook, L=6.0 m
4 x Ratchet lashing, LC 2000 daN, 50 mm, two-part, double J hook, L=8.0 m
4 x Edge protector, for 50 mm webbing width
4 x Slip restraining mats, 250 x 100 x 8 mm

Art.-No.: N35500002

Minimum purchase: 2 bags

Including sports bag

INFO

General information about load security

The varying forces, which can result in slipping, rolling, tilting or even lift-off of loads during transport, are regularly underestimated. Possible consequences are e.g. that the vehicle gets out of control, the driving cab is damaged, the vehicle even overturns and the falling load endangers others! The common assumption that very heavy loads do not require lashing security, is a fatal error. Lashing of loads may be performed by competent users (trained in theory and practice) only.

Some basic rules about load security with ratchet lashings

- Depending on the cargo, consideration shall be given to select an appropriate vehicle with adequate structures and lashing points.
- The load centre of gravity should be as low as possible and ideally positioned according to the load distribution plan of the vehicle.
- The permissible gross weight and loads per axle must not be exceeded.
- The load should be stored as close and low as possible and should not leave free space between load, front wall or side walls. Free spaces between the outer walls and the load should be stuffed where possible.
- Depending on the type of cargo, the driving speed should be conform to the road and traffic situation as well as to the driving quality of the vehicle.
- Adverse friction values between cargo and loading area (oily metals, wet areas etc.) will considerably increase the requirement for a correct security of the load. Slip restraining mats will contribute to achieve a more economic and efficient load lashing security.
- Unstable cargo is very susceptible to tilting and in most cases has to be lashed extensively (calculation against slipping and tilting).
- Positive load lashing (e.g. supporting the cargo at front and side walls or with wedges or scantlings fixed on the loading platform) will contribute substantially to the stabilisation of the cargo and to reduction of additional lashing requirement.

Forces on cargo loads (EN 12195)

Truck and trailer loading (road transport) – Acceleration coefficients

During road transport the heaviest stresses on the load security equipment will occur during braking, lift-off of the load by vibration and impact as well as centrifugal forces in narrow curves.

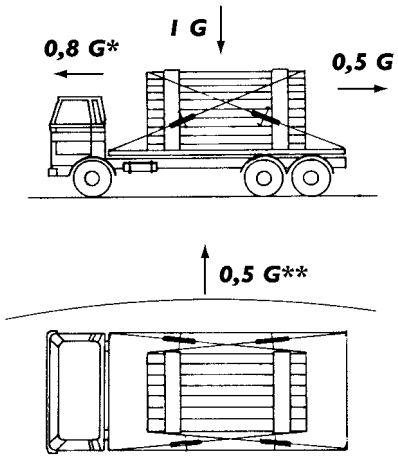

* The value for the longitudinal acceleration in combined traffic (lorry and/or trailer during rail transport) has to be calculated with 1G.

** 0.7 for tilting of instable cargo loads

Lashing methods

Over top lashing

Over top lashing consists of tensioning the lashings to the tension force so as to increase the friction force at the contact surface of the load to avoid any sliding of the load. Influence factors are the dimensions of the load, the acceleration values, the dynamic friction factors as well as the lashing angle. The calculation of lashing forces will give the required tension force of the lashing devices.

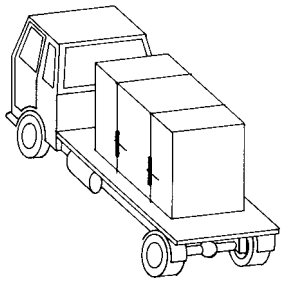

INFO

You will find the General Terms and Conditions at the end of the catalogue.

Please note the information on our training courses on page 4.

This user information presents a general overview regarding the application of web lashings and does not substitute the existing operating instructions for specific products!
Lashing operations with textile lashing equipment may be carried out by competent users (trained in theory and practice) only. When operated correctly, our textile lashings offer the highest degree of safety in line with long life expectancy and avoid damage to material and people.

Limitations of use

Temperature

Textile lashings in accordance with this part of the European standard EN 12195 are suitable for the following temperature areas:

a) -40°C up to +80°C for polypropylene (PP)

b) -40°C up to +100°C for polyamide (PA)

c) -40°C up to +120°C for polyester (PES)

These temperature areas may change in chemical environments. In this case consult the manufacturer or supplier for advice.

A change of the ambient temperature during transport may influence the tension force of the textile lashing. The tension force should be checked after entering warm regions.

Chemicals

The resistance against chemical influences varies depending on the materials used for the textile lashing. Please observe the advice of the manufacturer, if the textile
lashings are subjected to chemicals. Also consider that the effect of the chemical influence will increase with rising temperatures. The resistance of synthetic fibre against chemical influences is summarised as follows:

a) Polyamides are resistant against alkaline but affected by mineral acids.

b) Polyester is resistant against mineral acids but affected by alkaline solutions.

c) Polypropylene is hardly affected by acids and alkaline and is suited for applications that require high resistance against chemicals (except some organic solvents).

d) Harmless acid or alkaline solutions may be concentrated by evaporation and lead to damages. Affected textile lashings have to be taken out of service immediately, thoroughly rinsed in cold water and dried in the open-air.

Operation in danger zones

During loading and unloading observe low hanging aerial contact lines.

Application advices

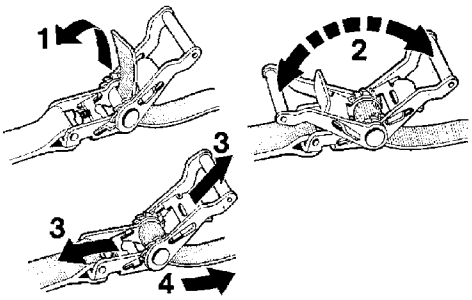

- Selection and use of textile lashings depend on the required tensioning force as well as the mode of application and type of cargo to be lashed. Size, form and weight of the cargo determine the correct choice in addition to the intended usage. For stability reasons, at least two lashing systems should be used for over top lashing and two pairs of lashing straps for diagonal lashing.
- The selected web lashing must be strong enough for the intended job and have the correct length for the type of lashing. Always consider adequate lashing practice: Attachment and removal of lashings should be planned before the start of the journey. In case of longer trips, partial unloadings must be considered. The number of lashings must be calculated as per EN 12195-1:2000. Over top lashing requires systems, which are labelled STF for over top lashing.
- On account of different characteristics and change of length under load, different lashings (e.g. lashing chains and web lashings) may not be used for lashing the same load. When using additional fittings or lashing devices, make sure that these correspond to the existing web lashing.
- During operation, flat hooks must be in contact with the full width of the hook mouth.

INFO

INFO

- Releasing of the lashing: Prior to releasing, make sure that the load stands safely (even without safety device) and does not endanger the operator by falling. Before departure check whether additional lashings will be required for further transportation after partial unloading has occured.
  This is also true for lashing elements which permit safe removal.
- Prior to unloading, the lashings must be released to an extent that the load stands freely.
- Make sure that the web lashing will not be damaged by the edges of the cargo. A visual inspection should be standard procedure before and after each usage.
- Only use textile lashings with legible identity labels.
- Textile lashings must not be overloaded:
  The max. hand force of 500 N (50 daN on the label; 1 daN = approx. 1 kg) may be applied with one hand only. Do not use cheater bars or levers unless they are part of the lashing element.
- Knotted textile lashings must not be used.
- Damages to the identity labels should be avoided by keeping them away from the edges of the cargo.
- Textile lashings should be protected against friction and abrasion and damages by sharp edges by application of protective sleeves and/or edge protectors.

Labelling

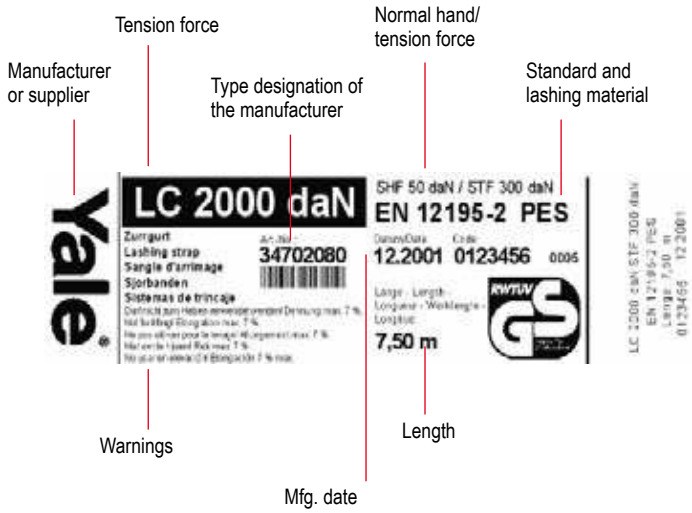

Maintenance and repair

Textile lashings may only be repaired if provided with legible identity labels. In case of accidental contact with chemicals, the web lashing has to be withdrawn from service and the manufacturer or supplier consulted for advice.

Criteria for disposal of textile lashings

Textile lashings must be withdrawn from service and returned for repair to the manufacturer in case of obvious defects. The following points are signs of possible damages:

Textile lashings:

- Cracks, cuts, notches and breaks in the load bearing strands and seams as well as deformations by heat;

Tensioning devices and fittings:

- Deformations, cracks, obvious signs of wear and corrosion.

The quantity of textile lashings has to be calculated according to EN 12195-1:2010

Only use lashing systems for over top lashing which show STF on the label. For easy identification of the required quantity of textile lashings or existing lashings needed for the cargo to be lashed refer to the following table, which has been calculated with friction coefficients of μ = 0.2, μ = 0.4 and μ = 0.6 at various angles of elevation α.

- The calculation refers to situations with min. two, however max. ten textile lashings.
- Whenever possible, always use a slip resistant mat with a certified friction coefficient of 0.6!
- Always operate with the highest possible angle of elevation and lash as steep as possible!!!
- The friction coefficients are applicable for clean and dry surfaces, well covered from frost, ice and snow. In case of moisture refer to the direct lashing method or double the amount of textile lashings!

INFO

Friction factors according to EN 12195-1:2010

Combination of materials in the contact surface	Friction factor μ	when using a slip resistant mat
Cut timber against fabric base laminate/plywood	0.5	0.6
Cut timber against grooved aluminium	0.4	0.6
Cut timber against steel sheets	0.4	0.6
Cut timber against shrink films	0.3	0.6
Shrink films against fabric base laminate/plywood	0.4	0.6
Shrink films against grooved aluminium	0.4	0.6
Shrink films against steel sheets	0.4	0.6
Shrink films against shrink films	0.4	0.6
Cardboard box against cardboard box	0.5	0.6
Cardboard box against wooden pallet	0.5	0.6
Big bags against wooden pallet	0.4	0.6
Flat steel bars against cut timber	0.5	0.6
Unpainted corregated sheets against cut timber	0.5	0.6
Painted corregated sheets against cut timber	0.4	0.6
Unpainted corregated sheets against unpainted corregated sheets	0.3	0.6
Painted corregated sheets against painted corregated sheets	0.2	0.6

Number of required textile lashings for different cargo weights

- at different friction factors
- at different angles

Tension force of ratchet 300 daN at standard hand force of 50 daN according to EN 12195

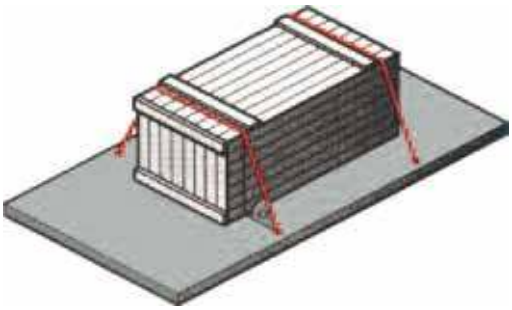

Applicable to textile lashings ZGR-50-2500 with LC 2500 daN and ZGR-50-2000 with LC 2000 daN

	Friction factor μ 0.20 Top angle			Friction factor μ 0.40 Top angle			Friction factor μ 0.60 Top angle		
Cargo weight	30°	60°	90°	30°	60°	90°	30°	60°	90°
1000 kg		10	9	7	4	3	3	2	2
2000 kg					8	7	6	3	3
3000 kg						10	9	5	4
4000 kg								7	6
5000 kg								8	7
6000 kg								10	9
7000 kg									10
8000 kg									
9000 kg									
10000 kg									

Cells without indication require more than 10 web lashings. In these cases a reasonable cargo securing can only be obtained by direct lashing method. Obstruction forces by cargo boards and form-fit locking devices have not been considered.

ZGK-25-250
Cambuckle lashing

Made from polyester (PES), EN 12195-2
25 mm - lashing capacity LC 250 daN.

Features

- Standard tension force STF 30 daN at standard hand force SHF 50 daN.
- Standard lenghts 2 m, 4 m and 6 m.

INFO

Other lengths on request.

Technical data ZGK-25-250

Model	Art.-No.	Version	Lashing capacity LC daN	Webbing width mm	Length of lashing mm
ZGK-25-250-1	192067490	one-part	250	25	2000
ZGK-25-250-1	N35100240	one-part	250	25	4000
ZGK-25-250-1	N35100260	one-part	250	25	6000

ZGR-25-400
Ratchet lashing

Made from polyester (PES), EN 12195-2
25 mm - lashing capacity LC 400 daN.

Features

- Standard tension force STF 50 daN at standard hand force SHF 50 daN.
- Standard lenghts 4 m and 6 m.

INFO

Other lengths on request.

Technical data ZGR-25-400

Model	Art.-No.	Version	Lashing capacity LC daN	Webbing width mm	Length of lashing mm
ZGR-25-400-1	N34100440	one-part	400	25	4000
ZGR-25-400-1	N34100460	one-part	400	25	6000
ZGR-25-400-2-SPH	N34700440	two-part - with double J hook	400	25	4000
ZGR-25-400-2-SPH	N34700460	two-part - with double J hook	400	25	6000

ZGR-25-500
Ratchet lashing

Made from polyester (PES), EN 12195-2
25 mm - lashing capacity LC 500 daN.

Features

- Standard tension force STF 100 daN at standard hand force SHF 50 daN.
- Standard lenghts 2 m, 4 m and 6 m.

INFO

Other lengths on request.

Technical data ZGR-25-500

Model	Art.-No.	Version	Lashing capacity LC daN	Webbing width mm	Length of lashing mm
ZGR-25-500-1	192067491	one-part	500	25	2000
ZGR-25-500-1	N34100540	one-part	500	25	4000
ZGR-25-500-1	N34100560	one-part	500	25	6000
ZGR-25-500-2-SPH	192067503	two-part - with double J hook	500	25	2000
ZGR-25-500-2-SPH	N34700540	two-part - with double J hook	500	25	4000
ZGR-25-500-2-SPH	N34700560	two-part - with double J hook	500	25	6000

ZGR-35-1000
Ratchet lashing

Made from polyester (PES), EN 12195-2
35 mm - lashing capacity LC 1000 daN.

Features

- Standard tension force STF 150 daN at standard hand force SHF 50 daN.
- Standard lenghts 4 m, 6 m and 8 m.

SPH - with double J hook

Technical data ZGR-35-1000

Model	Art.-No.	Version	Lashing capacity LC daN	Webbing width mm	Length of lashing mm
ZGR-35-1000-1	192067506	one-part	1000	35	4000
ZGR-35-1000-1	N34101060	one-part	1000	35	6000
ZGR-35-1000-1	N34101080	one-part	1000	35	8000
ZGR-35-1000-2-SPH	192067515	two-part - with double J hook	1000	35	4000
ZGR-35-1000-2-SPH	N34701060	two-part - with double J hook	1000	35	6000
ZGR-35-1000-2-SPH	N34701080	two-part - with double J hook	1000	35	8000

INFO

Other end fittings (hooks) and individual prints on webbing are available on request.

Other lengths on request.

ZGR-50-2000
Ratchet lashing

Made from polyester (PES), EN 12195-2
50 mm - lashing capacity LC 2000 daN.

Features

- Standard tension force STF 300 daN at standard hand force SHF 50 daN.
- Standard lenghts 6 m, 8 m and 10 m.

GKH - with twisted snap hook

SPH - with double J hook

KLH - with claw hook

Technical data ZGR-50-2000

Model	Art.-No.	Version	Lashing capacity LC daN	Webbing width mm	Length of lashing mm
ZGR-50-2000-1	N34199999-166	one-part	2000	50	6000
ZGR-50-2000-1	N34102080	one-part	2000	50	8000
ZGR-50-2000-1	N34102010	one-part	2000	50	10000
ZGR-50-2000-2-GKH	N34202080	two-part - with snap hook	2000	50	8000
ZGR-50-2000-2-GKH	N34202010	two-part - with snap hook	2000	50	10000
ZGR-50-2000-2-KLH	N34302080	two-part - with claw hook	2000	50	8000
ZGR-50-2000-2-KLH	N34302010	two-part - with claw hook	2000	50	10000
ZGR-50-2000-FE-KLH	N34302005	Fixed end with ratchet and claw hook	2000	50	400
ZGR-50-2000-2-SPH	N34799999-248	two-part - with double J hook	2000	50	6000
ZGR-50-2000-2-SPH	N34702080	two-part - with double J hook	2000	50	8000
ZGR-50-2000-2-SPH	N34702010	two-part - with double J hook	2000	50	10000
ZGR-50-2000-FE-SPH	N34702005	Fixed end with ratchet and double J hook	2000	50	400

INFO

Other end fittings (hooks) and individual prints on webbing are available on request.

Other lengths on request.

ZGR-50-2500
Ratchet lashing

Made from polyester (PES), EN 12195-2
50 mm - lashing capacity LC 2500 daN.

Features

- Standard tension force STF 300 daN at standard hand force SHF 50 daN.
- Standard lenghts 8 m and 10 m

GKH - with twisted snap hook

SPH - with double J hook

KLH - with claw hook

Technical data ZGR-50-2500

Model	Art.-No.	Version	Lashing capacity LC daN	Webbing width mm	Length of lashing mm
ZGR-50-2500-1	N34102580	one-part	2500	50	8000
ZGR-50-2500-1	N34102510	one-part	2500	50	10000
ZGR-50-2500-2-GKH	N34202580	two-part - with snap hook	2500	50	8000
ZGR-50-2500-2-GKH	N34202510	two-part - with snap hook	2500	50	10000
ZGR-50-2500-2-KLH	N34302580	two-part - with claw hook	2500	50	8000
ZGR-50-2500-2-KLH	N34302510	two-part - with claw hook	2500	50	10000
ZGR-50-2500-FE-KLH	N34302505	Fixed end with ratchet and claw hook	2500	50	400
ZGR-50-2500-2-SPH	N34702580	two-part - with double J hook	2500	50	8000
ZGR-50-2500-2-SPH	N34702510	two-part - with double J hook	2500	50	10000
ZGR-50-2500-FE-SPH	N34702505	Fixed end with ratchet and double J hook	2500	50	400

INFO

Other end fittings (hooks) and individual prints on webbing are available on request.

Other lengths on request.

ZGZ-G-75-5000
Ratchet lashing

Made from polyester (PES), EN 12195-2
75 mm - lashing capacity LC 5000 daN.

Features

- Standard tension force STF 500 daN at standard hand force SHF 50 daN.
- With long lever-transmission - pull ratchet
- Standard lenghts 2 m and 4 m.

Long lever-transmission

SPH - with double J hook

Technical data ZGZ-G-75-5000

Model	Art.-No.	Version	Lashing capacity LC daN	Webbing width mm	Length of lashing mm
ZGZ-G-75-5000-1	192067448	one-part	5000	75	2000
ZGZ-G-75-5000-1	192067450	one-part	5000	75	4000
ZGZ-G-75-5000-2-SPH	192017853	two-part - with double J hook	5000	75	2000
ZGZ-G-75-5000-2-SPH	192017854	two-part - with double J hook	5000	75	4000

INFO

Other end fittings (hooks) and individual prints on webbing are available on request.

Other lengths on request.

ZGR-XL-50-2500 Ratchet lashing with long lever push ratchet

Made from polyester (PES), EN 12195-2
50 mm - lashing capacity LC 2500 daN.

Features

- Standard tension force STF 500 daN at standard hand force SHF 50 daN.
- Long lever ratchet with precise interlocking.
- With device for controlled release (securing against tipping load).
- Standard lenghts 8 m and 10 m.

Technical data ZGR-XL-50-2500 with device for controlled release

Model	Art.-No.	Version	Lashing capacity LC daN	Webbing width mm	Length of lashing mm
ZGR-XL-50-2500-1	N34112580	one-part	2500	50	8000
ZGR-XL-50-2500-1	N34112510	one-part	2500	50	10000
ZGR-XL-50-2500-2-GKH	N34212580	two-part - with snap hook	2500	50	8000
ZGR-XL-50-2500-2-GKH	N34212510	two-part - with snap hook	2500	50	10000
ZGR-XL-50-2500-2-KLH	N34312580	two-part - with claw hook	2500	50	8000
ZGR-XL-50-2500-2-KLH	N34312510	two-part - with claw hook	2500	50	10000
ZGR-XL-50-2500-2-SPH	N34712580	two-part - with double J hook	2500	50	8000
ZGR-XL-50-2500-2-SPH	N34712510	two-part - with double J hook	2500	50	10000

Long lever ratchet
with precise interlocking. Device for controlled release (securing against tipping load).

GKH - with twisted snap hook

SPH - with double J hook

KLH - with claw hook

INFO

Other end fittings (hooks) and individual prints on webbing are available on request.

Other lengths on request.

ZGR-XLZ-50-2500
Ratchet lashing
with long lever pull ratchet

Made from polyester (PES), EN 12195-2
50 mm - lashing capacity LC 2500 daN.

Features

- Standard tension force STF 500 daN at standard hand force SHF 50 daN.
- Long lever ratchet with precise interlocking.
- Ergonomic pull-type design.
- Standard lenghts 8 m and 10 m.

INFO

Other end fittings (hooks) and individual prints on webbing are available on request.

Other lengths on request.

Technical data ZGR-XLZ-50-2500 ergonomic pull-type design

Model	Art.-No.	Version	Lashing capacity LC daN	Webbing width mm	Length of lashing mm
ZGR-XLZ-50-2500-1	N34132580	one-part	2500	50	8000
ZGR-XLZ-50-2500-1	N34132510	one-part	2500	50	10000
ZGR-XLZ-50-2500-2-GKH	N34232580	two-part - with snap hook	2500	50	8000
ZGR-XLZ-50-2500-2-GKH	N34232510	two-part - with snap hook	2500	50	10000
ZGR-XLZ-50-2500-2-KLH	N34332580	two-part - with claw hook	2500	50	8000
ZGR-XLZ-50-2500-2-KLH	N34332510	two-part - with claw hook	2500	50	10000
ZGR-XLZ-50-2500-2-SPH	N34732580	two-part - with double J hook	2500	50	8000
ZGR-XLZ-50-2500-2-SPH	N34732510	two-part - with double J hook	2500	50	10000

ZGA Automatic ratchet lashing

Made from polyester, EN 12195-2

Features

- With automatic ratchet.
- Quick and precise fixing of load.
- Stepless adjustment.
- Easy rolling of webbing strap.
- PVC coated S-Hook to protect the loading space.

Technical data ZGA

Model	Art.-No.	Version	Lashing capacity LC daN	Webbing width mm	Length of lashing mm
ZGA-25-300	N34799999-9681	two-part - with plastic coated S hooks	300	25	3000
ZGA-50-750	N34799999-11159	two-part - with double J hook	750	50	3000

ZGZB-RU-PU
Ratchet base

Manufactured from cut resistant polyurethane.
Can also be used as edge protector.

Technical data ZGZB-RU-PU

Model	Art.-No.	For webbing width mm
ZGZB-RU-PU-50	N39150001	35 - 50
ZGZB-RU-PU-75	N39150002	75

ZGZB-KS-PP-50
Edge protector

Edge protector for lashing sensitive loads
(cardboard boxes etc.).

Technical data ZGZB-KS-PP-50

Model	Art.-No.	For webbing width mm
ZGZB-KS-PP-50	N39160003	50

ZGZB-KS-PP-70
Edge protector

Inherently stable edge protection, protects both load and ratchet lashing.

Leg lengths 135 x 170 mm.

Technical data ZGZB-KS-PP-70

Model	Art.-No.	For webbing width mm
ZGZB-KS-PP-70	192020360	up to 70

ZGZB-KSP-PP
Edge protector profile

Manufactured from polypropylene or recycled cardboard, to protect edges of loads. Length up to 6 m.

Technical data ZGZB-KSP-PP

Model	Art.-No.	Dimensions mm
ZGZB-KSP-PP	N39160004	190 x 190 x 20

ZGZB-ARM
Slip restraining mats

Manufactured from compressed rubber granulate to achieve a defined friction coefficient of μ = 0.6.
Even if an emergency stop or evasive action is being taken – the cargo trucks or train wagons must not move. But only in very few cases the vehicle structure alone will offer sufficient load security.
For this reason, slip restraining devices should belong to the standard equipment of every professional transport. Slip restraining mats will decrease the danger which emanates from plain loading platforms. They will reduce the required total pre-tensioning forces during over top lashing of loads and will contribute – together with the textile lashings – that the loads will form a single unit with the vehicle or wagon.
The slip restraining effect will benefit especially those products, which do not stand a high surface pressure.
The dangers resulting from incorrect load lashing practices are often underestimated. Acceleration forces in standard driving situations are close to the dead weight of the load.

INFO

The friction force FW of a slip restraining mat impedes load displacement and is physically explained as follows:

FW = m x G
G = Weight force
m = Friction value

The difference between inertial force F and friction force FW is called securing force FS.

FS = F - FW

The securing force FS is the strength which has to be absorbed by the safety devices.

Technical data ZGZB-ARM

Model	Art.-No.	Dimensions mm
ZGZB-ARM-250-8	N39170001	1000 x 250 x 8

RLSP
Load binders

Lashing capacity 4000 - 10600 daN

The load binder is a universal tool to restrain and secure loads and freight. Manual operation of the binder lever extends or retracts the threaded spindles. Tension is upheld by the self-locking threads.

The load binder is fitted with shortening hooks for direct attachment to chains or with clevis ends for use with existing fastening devices.

Technical data RLSP

Model	Art.-No.	Version	Lashing capacity LC daN	Weight kg
RLSP-08-ÖÖ	N43300015	Clevis	4000	3.6
RLSP-10-ÖÖ	N43300016	Clevis	6300	3.6
RLSP-13-ÖÖ	N43300017	Clevis	10600	3.8
RLSP-08-HH	N43300012	Shortening hooks	4000	4.5
RLSP-10-HH	N43300013	Shortening hooks	6300	5.5
RLSP-13-HH	N43300014	Shortening hooks	10600	8.4

Dimensions RLSP

Model	RLSP-08-ÖÖ	RLSP-10-ÖÖ	RLSP-13-ÖÖ	RLSP-08-HH	RLSP-10-HH	RLSP-13-HH
Chain size, mm	8	10	13	8	10	13
B1, mm	250	250	250	250	250	250
B2 min., mm	360	360	366	588	630	722
B2 max., mm	510	510	516	738	780	872
Ø E, mm	20	20	25	–	–	–
L, mm	230	230	360	190	230	360

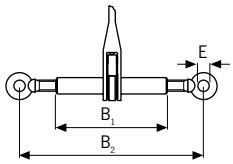

Load binder with protection against unscrewing,

clevis acc. to EN 12195-3 on both ends.

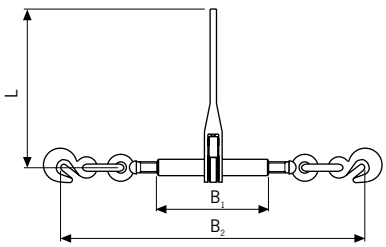

Load binder with protection against unscrewing,

clevis or shortening hook with safety pin acc. to EN 12195-3 on both ends.

ASH
Weld-on hooks

Capacity 1000 - 8000 kg

Weld-on hooks model ASH are universal attachments for use on trucks, excavators, low loaders and spreader beams, etc. The forged safety latch has high lateral stability and an ergonomic shape. Every weld-on hook has an identification number so that its history can be traced back through forging to the origin of the material.

The hook can be welded without any special preparation, e.g. prewarming.

The hook and safety latch are epoxy resin coated for added corrosion protection, the return spring is made from stainless steel.

Technical data ASH

Model	Art.-No.	Capacity kg	Weight kg
ASH 1	N41000104	1000	0.5
ASH 3	N41000035	3000	1.3
ASH 5	N41000036	5000	2.4
ASH 8	N41000037	8000	3.6

Dimensions ASH

Model	ASH 1	ASH 3	ASH 5	ASH 8
Seam density a, mm	4	6	7	8 - 9
L1 x B1, mm	90 x 25	130 x 35	160 x 45	170 x 50
B2, mm	19	26	30	40
C, mm	24	32	40	51
H1, mm	6	10	12	12
H2, mm	76	117	121	142
L2, mm	22	29	47	52

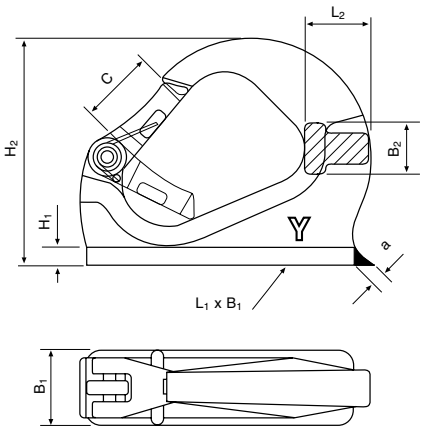

RSE-S Yaletex Entertainment round slings

Made from polyester (PES), EN 1494-2 with extra sturdy stitchless protection sleeve, with capacity label.

- With black single sleeve, PU-starched and thermally fixed
- Identification label sewn into a transparent protective cover
- Heat resistant up to +100 °C

Technical data RSE-S

Model	Art.-No.	WLL kg	Width mm	Length m
RSE-S-01000	N33101007	1000	46	0.5
RSE-S-01000	N33101012	1000	46	1.0
RSE-S-01000	N33101017	1000	46	1.5
RSE-S-01000	N33101022	1000	46	2.0
RSE-S-01000	N33101027	1000	46	2.5
RSE-S-01000	N33101032	1000	46	3.0
RSE-S-01000	N33101042	1000	46	4.0
RSE-S-01000	-	1000	46	5.0
RSE-S-01000	-	1000	46	6.0
RSE-S-02000	N33102007	2000	46	0.5
RSE-S-02000	N33102012	2000	46	1.0
RSE-S-02000	N33102017	2000	46	1.5
RSE-S-02000	N33102022	2000	46	2.0
RSE-S-02000	N33102027	2000	46	2.5
RSE-S-02000	N33102032	2000	46	3.0
RSE-S-02000	N33102042	2000	46	4.0
RSE-S-02000	N33102052	2000	46	5.0
RSE-S-02000	N33102062	2000	46	6.0

RSE-SRS Yaletex Entertainment round slings with steel rope inserts

BG-certified according to DGUV 17 (former BGV C1) according to EN 1492-2, EN 13414-1/A1 and EN 13414-3 appendix A

- Steel rope with loose polyester cover
- With black single sleeve, PU-starched and thermally fixed
- Identification label sewn into a transparent protective cover
- Control window for checking the rope core
- Minimum edge radius 6 mm
- Proven heat resistance from -40 °C up to +150 °C
- The steel cable insert eliminates the requirement of DGUV 17 for a secondary safety device

Technical data RSE-SRS

Model	Art.-No.	WLL kg	Width mm	Length m
RSE-SRS-01000	N33601005	1000	46	0.5
RSE-SRS-01000	N33601010	1000	46	1.0
RSE-SRS-01000	N33601015	1000	46	1.5
RSE-SRS-01000	N33601020	1000	46	2.0
RSE-SRS-01000	N33601025	1000	46	2.5
RSE-SRS-01000	N33601030	1000	46	3.0
RSE-SRS-01000	N33601040	1000	46	4.0
RSE-SRS-02000	N33602005	2000	46	0.5
RSE-SRS-02000	N33602010	2000	46	1.0
RSE-SRS-02000	N33602015	2000	46	1.5
RSE-SRS-02000	N33602020	2000	46	2.0
RSE-SRS-02000	N33602025	2000	46	2.5
RSE-SRS-02000	N33602030	2000	46	3.0
RSE-SRS-02000	192065769	2000	46	4.0

PU-KSW-30-S Yaletex Entertainment round slings edge protector

Made of cut-resistant polyurethane. With slots for easy mounting and fixing on the round sling.

Technical data PU-KSW-30-S

Model	Art.-No.	Diameter mm	Length m
PU-KSW-30-S	N39160022	30	80

HSE-TH Yaletex Theater load belts

Endlessly stitched, with a 50 mm loop, black.

- With black single sleeve, PU-starched and thermally fixed
- WLL 0.5 t, made from polyester (PES)
- According to EN 1492-1 form A2
- Heat resistant up to +100 °C

Technical data HSE-TH

Model	Art.-No.	WLL kg	Width/Loop Ø mm	Length m
HSE-TH-500	N31600503	500	25/50	0.35
HSE-TH-500	N31600505	500	25/50	0.5
HSE-TH-500	192050762	500	25/50	0.7
HSE-TH-500	N31600510	500	25/50	10
HSE-TH-500	N31600515	500	25/50	1.5

ZGK-S-25-0250-1 Entertainment cambuckle lashings

Made from polyester (PES), EN 12195-2, 25 mm, lashing capacity LC 250 daN, standard tension force STF 30 daN at standard hand force SHF 50 daN.

Technical data ZGK-S-25-0250-1

Model	Art.-No.	Version	Lashing capacity LC daN	Webbing width mm	Length m
ZGK-S-25-0250-1	N35100242	one-part	250/500	25	4.0
ZGK-S-25-0250-1	N35100262	one-part	250/500	25	6.0

ZGR-S-25-0400 Entertainment cambuckle lashings

Made from polyester (PES), EN 12195-2, 25 mm, lashing capacity LC 400 daN, standard tension force STF 80 daN at standard hand force SHF 50 daN.

Technical data ZGR-S-25-0400

Model	Art.-No.	Version	Lashing capacity LC daN	Webbing width mm	Length m
ZGR-S-25-0400-1	N34100442	one-part	400/800	25	4.0
ZGR-S-25-0400-1	N34100462	one-part	400/800	25	6.0
ZGR-S-25-0400-2-SPH	N34700442	two-part with double J hook	400/800	25	4.0
ZGR-S-25-0400-2-SPH	N34700462	two-part with double J hook	400/800	25	6.0

ZGR-S-25-0500 Entertainment ratchet lashings

Made from polyester (PES), EN 12195-2, 25 mm, lashing capacity LC 500 daN, standard tension force STF 100 daN at standard hand force SHF 50 daN.

Technical data ZGR-S-25-0500

Model	Art.-No.	Version	Lashing capacity LC daN	Webbing width mm	Length m
ZGR-S-25-0500-1	N34100542	one-part	500/1000	25	4.0
ZGR-S-25-0500-1	N34100562	one-part	500/1000	25	6.0
ZGR-S-25-0500-2-SPH	N34700542	two-part with double J hook	500/1000	25	4.0
ZGR-S-25-0500-2-SPH	N34700562	two-part with double J hook	500/1000	25	6.0

ZGR-S-35-1000
Entertainment ratchet lashings

Made from polyester (PES), EN 12195-2, 35 mm, lashing capacity LC 1000 daN, standard tension force STF 150 daN at standard hand force SHF 50 daN.

Technical data ZGR-S-35-1000

Model	Art.-No.	Version	Lashing capacity LC daN	Webbing width mm	Length m
ZGR-S-35-1000-1	N34101062	one-part	1000/2000	35	6.0
ZGR-S-35-1000-1	N34101082	one-part	1000/2000	35	8.0
ZGR-S-35-1000-2-SPH	N34701062	two-part with double J hook	1000/2000	35	6.0
ZGR-S-35-1000-2-SPH	N34701082	two-part with double J hook	1000/2000	25	8.0

ZGR-S-50-2500
Entertainment ratchet lashings

Made from polyester (PES), EN 12195-2, 50 mm, lashing capacity LC 2500 daN, standard tension force STF 300 daN at standard hand force SHF 50 daN.

Technical data ZGR-S-50-2500

Model	Art.-No.	Version	Lashing capacity LC daN	Webbing width mm	Length m
ZGK-S-50-2500-1	N34102582	one-part	2500/5000	50	8.0
ZGK-S-50-2500-1	N34102512	one-part	2500/5000	50	10.0
ZGR-S-50-2500-2-SPH	N34702582	two-part with double J hook	2500/5000	50	8.0
ZGR-S-50-2500-2-SPH	N34702512	two-part with double J hook	2500/5000	50	10.0

GTG
Gas cylinder transport harness made from polyester (PES)

Gas cylinder transport harnesses are the simple and cost-effective way of safely transporting gas cylinders at height (e.g. with a winch).

Four different models with diameters of 14 cm, 25 cm or 30 cm cover a wide range of applications.

Features

- 2 pairs of eyes for transporting gas cylinders of different heights.
- GTG K 14 and GTG K 25 with Velcro fastener for easier loading of the harness.
- Easy handling due to low weight.
- UV-resistant, no material ageing or embrittlement
- Gentle handling of the gas cylinders.
- Moisture-resistant fabric, thus preventing frost damage.
- Low elongation (< 4 %)

INFO

Yale hoists and trolleys are not designed for passenger elevation applications and must not be used for this purpose.

Technical data GTG and GTG K

Model	Art.-No.	Capacity WLL kg	Height cm	Circumference cm	Diameter cm	Number of eyes
GTG K 14	192083222	50	150	44	14	2+2
GTG 25	192020407	200	150	80	25	2+2
GTG K 25	192042091	200	150	80	25	2+2
GTG 30	192053794	200	150	95	30	2+2

Material Handling Equipment

Pfaff-silberblau industrial trucks are ideal for transporting and stacking loads on pallets in factories.
The comprehensive range of products offers the correct model for numerous applications; be it for different route lengths or degrees of utilization, gradients and ramps or areas with a corrosion hazard.

From pallet trucks, manual stackers to electric stackers and elevating platforms – you will find the appropriate solution.

Table of contents

	Page
Hand pallet trucks	**294 - 303**
Hand pallet trucks with weighing system	**304 - 305**
Scissor pallet trucks	**306 - 307**
Electric pallet trucks	**308 - 311**
Manual drive stackers	**313 - 319**
Electric pedestrian stackers	**320 - 327**
Elevating platforms	**328 - 341**

Load Moving Systems

Yale heavy load moving systems for the safe transportation of heavy loads of up to 100 t.

Products range from separately used load moving skates to complete systems.

Load Moving Systems	**346 - 351**

INFO

Please note our user instructions at the beginning of each chapter

PFAFF silberblau

MATERIAL HANDLING EQUIPMENT

Table of contents >>

INFO

This user information presents a general review regarding the application of material handling equipment and does not substitute the existing operating instructions for specific industrial trucks and elevating platforms!

Operating industrial trucks as well as lifting operations must be carried out by competent persons. When operated correctly, our products will offer the highest degree of safety, avoid damage to products and people and present a long life expectancy.

Modification of delivery condition

Design and construction of material handling products must not be altered by e.g. assembly of outside supplied components, bending, welding, grinding, cutting-off parts, adding boreholes, removal of safety devices or fitting of attachments.

Limitations of operation

Loading

The rated capacity (WLL) indicated on the product is the maximum load which must not be exceeded.

Transport of people

Transport of people with industrial trucks is generally forbidden!

Operation in danger zones

Lifting or transport of loads must be avoided while personnel are in the danger zone.
Do not allow people to stay on or below a raised load.
Do not place hands or feet under the raised fork frame or load on account of the imminent danger of crushing or shearing.

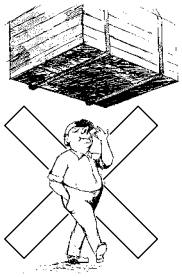

Inspection before starting work

- Prior to starting work, the unit must be inspected for obvious deficiencies and failures. Operational checks must be performed to ensure lifting, lowering and travel operate correctly.
- Check the parking brake is effective and the key switch operates correctly to protect against unauthorised use.
- Load carriage and forks must not show obvious defects (deflections, cracks or other wearing).
- Wheels and tires must not be defective.
- The hydraulic system must be in perfect order (lifting, lowering, density).
- The functional capability of the collision protective device should be checked.
- Battery charging status, fastening and cable connections of the battery as well as battery plug must be inspected for appropriate status as well as the battery cell lids (dry, clean).

INFO

You will find the General Terms and Conditions at the end of the catalogue.

Please note the information on our training courses on page 4.

Application advices

- Our material handling equipment must be operated on in-plant areas only.
- Only use industrial trucks in perfect condition and with legible identity plate.
- Industrial trucks may only be operated by skilled people, who have been instructed (in theory and practice) by the responsible user.
- The travel speed must conform to local conditions.
- Industrial trucks must be operated on flat, level and even ground.
- The operator must make sure that the load unit is in perfect condition and safely attached.
- Pallets may be transported individually only.
- Industrial trucks must not be used as car jacks.
- Industrial trucks must not be used in areas which are not illuminated suffiently.
- Forks may not be used as levers.
- Loading of just one fork, e.g. for lifting of a machine, is strictly forbidden.
- Industrial trucks may not be operated in direct contact with foodstuffs.
- Never turn the hand lever 90° in order to stop the truck.
- The industrial truck must not be operated in explosive atmospheres (special versions on request).

Maintenance and repair

- To ensure safe operation, all material handling equipment must be subjected to regular inspections according to the maintenance instructions provided by the manufacturer.
- Material handling equipment, which is due for maintenance normally at least once per year, unless adverse working conditions dictate shorter periods.
- Inspections and repairs must be performed by competent persons or specialist workshops that use original spare parts. Inspections and repairs have to be recorded consecutively.

Inspections

- Inspections are visual and functional and shall establish that the product has not been damaged by incorrect transport or storage. In addition check for damage, wear, corrosion or other deficiencies as well as completeness and function safety devices.
  Inspections are instigated by the user.
  Die Prüfungen sind vom Betreiber zu veranlassen.
- Material handling products have to be cleaned prior to inspection. The cleaning procedure must not cause chemical damages (e.g. no acid – embrittlement) no incorrect temperature stress by e.g. flame cleaning or possible concealment of cracks due to excessive material abrasion (sand blasting).
  We shall be pleased to consult you in this respect!
- **Inspection of fork frame**
  The fork frame has to be checked regularly for obvious defects, deformations and cracks as well as wear and corrosion.
- **Inspection of control handle**
  The control handle must be checked regularly for obvious defects, deformations, cracks. Moreover, check screws for fixed seat.
- **Inspection of oil level**
  Check oil level every six months (oil viscosity 30 Cst at 40 °C). At ambient temperature around 0 °C we recommend AVILUB RSL 22.
- **Inspection of lubrication and density**
  Bolts, axles and push rods should be cleaned and lubricated depending on application with e.g. Shell FD or comparable grease.
- The hydraulic unit has to be checked regularly for density.

INFO

INFO

Load diagrams for residual carrying capacities

EHH PSE 10-30

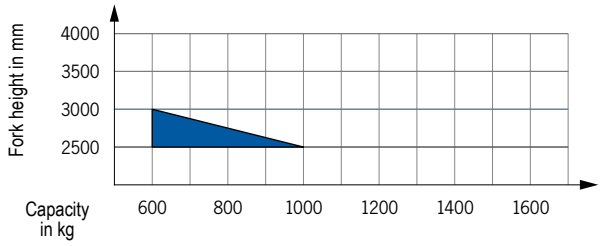

EHH PS 12-25/12-29/12-35

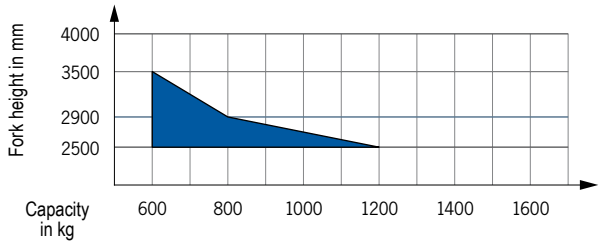

EGV PSL 12-25 II/12-29 II/12-35 II

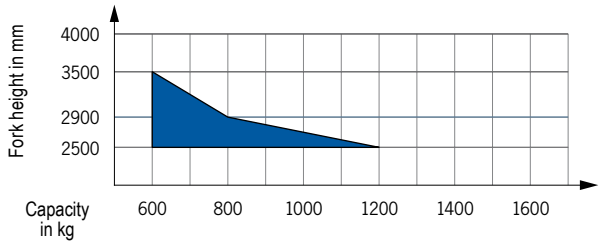

EGV PSH 14-45 T II/14-45 TF II

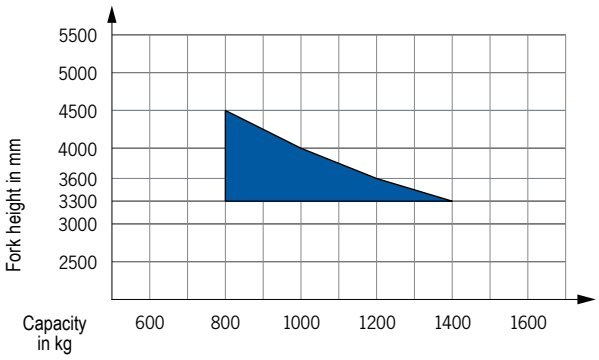

EGV PSH 14-50 T II

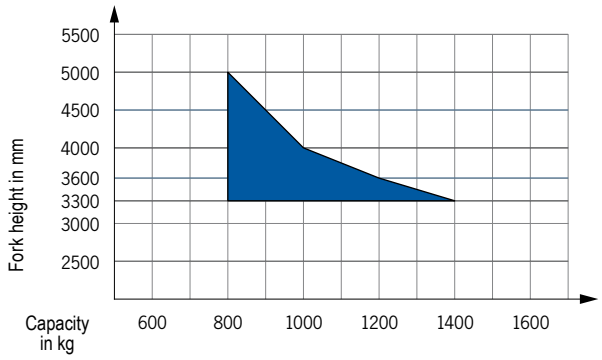

EGV PSH 12-25 II/12-29 II/12-35 II

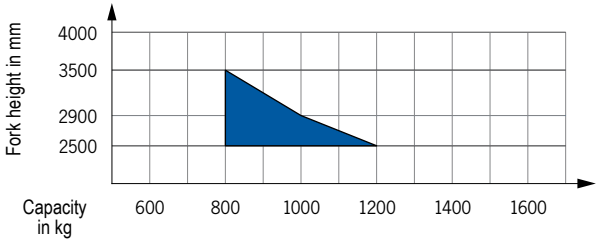

EGV PSH 16-25 II/16-29 II/16-35 II

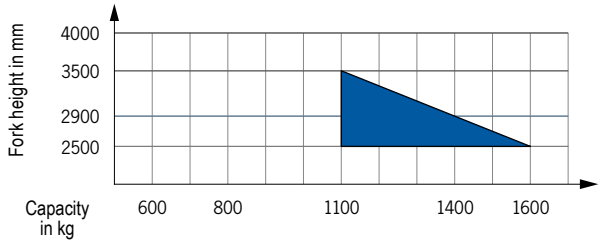

Technical questionnaire to identify a suitable material handling product

Company: _____ Date: _____

Contact: _____ e-Mail: _____

Phone: _____ Fax: _____

Capacity _____ kg
Fork height max. _____ mm
Freelift _____ mm
Required residual lifting
capacity _____ mm
at fork height _____ mm
Headroom with mast retracted _____ mm

Lifting

- ☐ manual-hydraulic
- ☐ electric-hydraulic

Drive

- ☐ manual
- ☐ electric

Transport and stacking of:

- ☐ palletised goods
- ☐ long goods
- ☐ loading lorries

Special requests

_____

_____

Lengths of application per shift

- ☐ up to 2 hours
- ☐ up to 4 hours
- ☐ up to 6 hours
- ☐ up to 8 hours

Shifts per day

_____

Drivers platform

- ☐ yes
- ☐ no

HU 25-115 TS SILVERLINE (Tandem rollers) Hand pallet truck

HU 25-115 ES SILVERLINE (Single rollers) Hand pallet truck

Capacity 2500 kg

For the professional transportation of palletised goods and box pallets under demanding conditions.

Features

- Ergonomic safety control handle for one-hand operation of lifting, driving and lowering.
- Ergonomic rubber control handle for safe handling.
- Low maintenance hydraulic pump with hard chromium plated piston.
- Frame and forks in robust steel construction, adjustable connecting rods, especially hardened axles and the high quality powder coating ensure a long life expectancy.

Optional: Parking brake

Technical data HU 25-115 TS SILVERLINE and HU 25-115 ES SILVERLINE

Model	HU 25-115 TS	HU 25-115 TS	HU 25-115 TS	HU 25-115 TS	HU 25-115 TS	HU 25-115 ES
Art.-No.	N21225460	N21225461	N21225462	N21225463	N21225464	N21225220
Capacity, kg	2500	2500	2500	2500	2500	2500
Load center c, mm	600	600	600	600	600	600
Weight, kg	70	68	69	65	70	67
Tyre type[1]	VG/PA	VG/PUR	PUR/PUR	PA/PA	PUR/PA	VG/PUR
Steering rollers, mm	200 x 50	200 x 50	200 x 50	200 x 50	200 x 50	200 x 50
Load rollers, mm	80 x 70	80 x 70	80 x 70	80 x 70	80 x 70	80 x 93
Number of wheels/load rollers	2/4	2/4	2/4	2/4	2/4	2/2
Stroke h3, mm	115	115	115	115	115	115
Height of control handle h14, mm	1230	1230	1230	1230	1230	1230
Fork height lowered h13, mm	85	85	85	85	85	85
Overall length L1, mm	1555	1555	1555	1555	1555	1555
Fork height s, mm	48	48	48	48	48	48
Fork width e, mm	160	160	160	160	160	160
Fork length l, mm	1150	1150	1150	1150	1150	1150
Outside dimension of forks b1, mm	540	540	540	540	540	540
Inside dimension of forks b3, mm	220	220	220	220	220	220
Ground clearance m1, mm	37	37	37	37	37	37
Aisle width pallet Ast, mm	1793	1793	1793	1793	1793	1793
Turning circle radius Wa, mm	1275	1275	1275	1275	1275	1275

[1]PA … Polyamide, PUR … Polyurethane, VG … Solid rubber

Hand pallet truck SILVERLINE with a wider loading width

Capacity 2000 - 2500 kg

For the professional transportation of special pallets, e.g. brickyard pallets or american pallets.

Features

- Ergonomic safety control handle for one-hand operation of lifting, driving and lowering.
- Ergonomic rubber control handle for safe handling.
- Low maintenance high performance hydraulic pump with hard chromium plated piston and pressure relief valve.
- Frame and forks in robust steel construction, adjustable connecting rods, especially hardened axles and the high quality powder coating ensure a long life expectancy.
- Steering angle of 105 degree to each side for easy handling in confined spaces.

Optional: Parking brake

Technical data hand pallet truck SILVERLINE

Model	HU 20-115 BTS	HU 25-115 BTS
Art.-No.	34527132	N21225457
Capacity, kg	2000	2500
Weight, kg	86	73
Tyre type [1]	VG/PUR	VG/PUR
Steering rollers, mm	200 x 50	200 x 50
Load rollers, mm	82 x 70	80 x 70
Stroke h3, mm	115	115
Height of control handle h14, mm	1200	1230
Fork height lowered h13, mm	85	85
Fork width e, mm	160	160
Fork length l, mm	1150	1150
Outside dimension of forks b1, mm	850	685

[1] PUR … Polyurethane, VG … Solid rubber

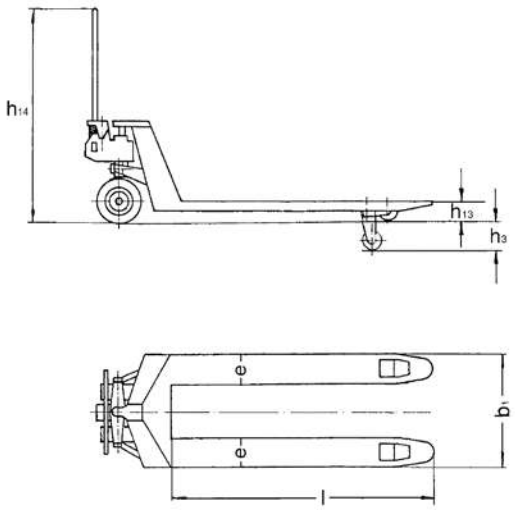

HU 15-115 FTP PROLINE Hand pallet truck with low height forks

Capacity 1500 kg

For the professional transportation of particularly low pallets.

Features

- Ergonomic safety control handle for one-hand operation of lifting, driving and lowering.
- Ergonomic rubber control handle for safe handling.
- Low maintenance high performance hydraulic pump with hard chromium plated piston and pressure relief valve.
- Frame and forks in robust steel construction, adjustable connecting rods, especially hardened axles and the high quality powder coating ensure a long life expectancy.
- Pallet entry height of only 51 mm for easy entry in particularly low pallets.
- Steering angle of 105 degree to each side for easy handling in confined spaces.

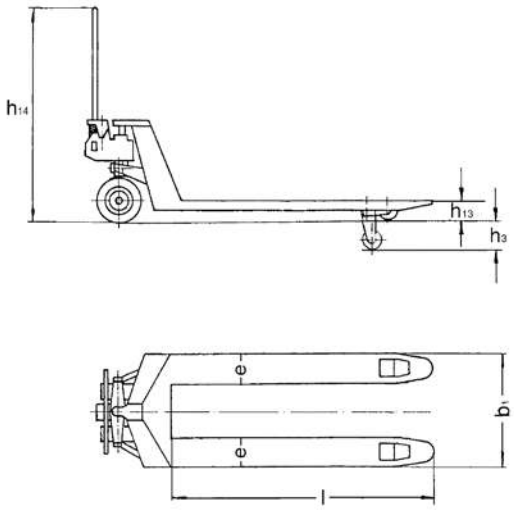

Technical data HU 15-115 FTP

Model	HU 15-115 FTP
Art.-No.	34527124
Capacity, kg	1500
Weight, kg	84
Tyre type [1]	PUR/PA
Steering rollers, mm	180 x 50
Load rollers, mm	50 x 70
Stroke h3, mm	115
Height of control handle h14, mm	1200
Fork height lowered h13, mm	51
Fork width e, mm	160
Fork length l, mm	1150
Outside dimension of forks b1, mm	540

[1] PUR … Polyurethane, PA … Polyamide

Hand pallet truck PROLINE with short forks

Capacity 2500 kg

For the professional transportation of short palletised goods and box pallets under demanding conditions.

Features

- Ergonomic safety control handle for one-hand operation of lifting, driving and lowering.
- Ergonomic rubber control handle for safe handling.
- Low maintenance high performance hydraulic pump with hard chromium plated piston and pressure relief valve.
- Frame and forks in robust steel construction, adjustable connecting rods, especially hardened axles and the high quality powder coating ensure a long life expectancy.
- Fork lenghts from 600 up to 1000 mm for transportation of small loads.
- Steering angle of 105 degree to each side for easy handling in confined spaces.
- Available with tandem (TP) or single rollers (EP).

Technical data hand pallet truck PROLINE with short forks

Model	HU 25-60 EP	HU 25-80 EP	HU 25-80 TP	HU 25-90 TP	HU 25-100 TP
Art.-No.	40011694	N21225221	N21225450	N21225451	N21225452
Capacity, kg	2500	2500	2500	2500	2500
Weight, kg	59	63	64	67	66
Tyre type [1]	VG/PA	VG/PUR	VG/PUR	VG/PUR	VG/PUR
Steering rollers, mm	200 x 50	200 x 50	200 x 50	200 x 50	200 x 50
Load rollers, mm	82 x 70	80 x 93	80 x 70	80 x 70	80 x 70
Stroke h3, mm	115	115	115	115	115
Height of control handle h14, mm	1200	1230	1230	1230	1230
Fork height lowered h13, mm	85	85	85	85	85
Fork width e, mm	160	160	160	160	160
Fork length l, mm	600	800	800	900	1000
Outside dimension of forks b1, mm	540	540	540	540	540

[1] PA … Polyamide, PUR … Polyurethane, VG … Solid rubber

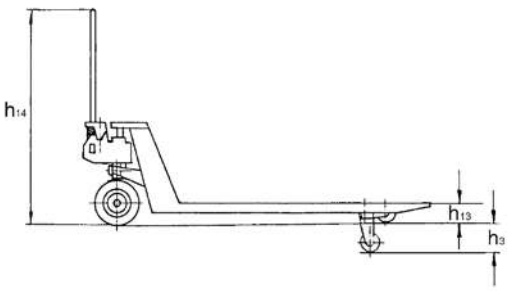

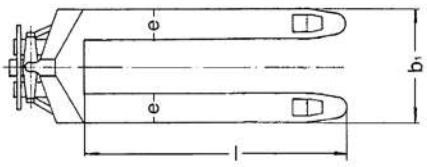

Hand pallet truck PROLINE for heavy loads

Capacity 3000 kg

For the professional transportation of heavy loads.

Features

- Ergonomic safety control handle for one-hand operation of lifting, driving and lowering.
- Ergonomic rubber control handle for safe handling.
- Low maintenance high performance hydraulic pump with hard chromium plated piston and pressure relief valve.
- Frame and forks in robust steel construction, adjustable connecting rods, especially hardened axles and the high quality powder coating ensure a long life expectancy.

Technical data HU PROLINE for heavy loads

Model	HU 30-115 TP
Art.-No.	N21230415
Capacity, kg	3000
Weight, kg	73
Tyre type [1]	PUR/PUR
Steering rollers, mm	200 x 50
Load rollers, mm	80 x 70
Stroke h3, mm	115
Height of control handle h14, mm	1230
Fork height lowered h13, mm	85
Fork width e, mm	160
Fork length l, mm	1150
Outside dimension of forks b1, mm	540

[1] PUR … Polyurethane

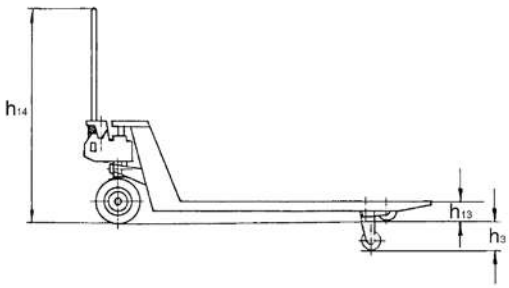

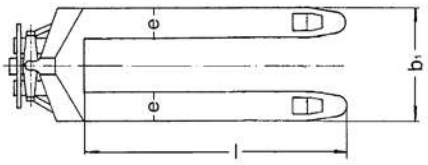

Hand pallet truck PROLINE with extended forks

Capacity 2000 - 2500 kg

For the professional transportation of long palletised goods and box pallets under demanding conditions.

Features

- Ergonomic safety control handle for one-hand operation of lifting, driving and lowering.
- Ergonomic rubber control handle for safe handling.
- Low maintenance high performance hydraulic pump with hard chromium plated piston and pressure relief valve.
- Frame and forks in robust steel construction, adjustable connecting rods, especially hardened axles and the high quality powder coating ensure a long life expectancy.
- Fork lenghts from 1300 up to 3000 mm for transportation of long and bulky loads.
- Steering angle of 105 degree to each side for easy handling in confined spaces.

Optional: Parking brake

INFO

Driving and parking brake available as option.

Technical data hand pallet truck PROLINE with extended forks

Model	HU 25-130 TP	HU 20-150 TP	HU 20-180 TP	HU 20-200 TP	HU 20-250 TP
Art.-No.	N21225453	N21225454	N21225455	N21225456	34527202
Capacity, kg	2500	2000	2000	2000	2000
Weight, kg	81	82	92	97	275
Tyre type [1]	VG/PUR	VG/PUR	VG/PUR	VG/PUR	PUR/PUR
Steering rollers, mm	200 x 50	200 x 50	200 x 50	200 x 50	200 x 50
Load rollers, mm	80 x 70	80 x 70	80 x 70	80 x 70	82 x 70
Stroke h3, mm	115	115	115	115	115
Height of control handle h14, mm	1230	1230	1230	1230	1200
Fork height lowered h13, mm	85	85	85	85	85
Fork width e, mm	160	160	160	160	170
Fork length l, mm	1300	1500	1800	2000	2500
Outside dimension of forks b1, mm	540	540	540	540	550

[1]PUR … Polyurethane, VG … Solid rubber Other versions available on request.

Hand pallet truck PROLINE with extended forks and increased capacity

Capacity 3000 - 3500 kg

For the professional transportation of long palletised goods and box pallets under demanding conditions.

Features

- Ergonomic safety control handle for one-hand operation of lifting, driving and lowering.
- Ergonomic rubber control handle for safe handling.
- Low maintenance high performance hydraulic pump with hard chromium plated piston and pressure relief valve.
- Frame and forks in robust steel construction, adjustable connecting rods, especially hardened axles and the high quality powder coating ensure a long life expectancy.
- Fork lenghts from 1500 up to 2000 mm for transportation of long goods.
- Steering angle of 105 degree to each side for easy handling in confined spaces.

INFO

With extended forks up to 2000 mm and increased capacity up to 3500 kg.

Technical data hand pallet truck PROLINE with extended forks and increased capacity

Model	HU 30-150 TP	HU 35-180 TP	HU 35-200 TP
Art.-No.	34527204	34527205	34527206
Capacity, kg	3000	3500	3500
Weight, kg	121	139	148
Tyre type [1]	PUR/PUR	PUR/PUR	PUR/PUR
Steering rollers, mm	200 x 50	200 x 50	200 x 50
Load rollers, mm	82 x 70	82 x 70	82 x 70
Stroke h3, mm	115	115	115
Height of control handle h14, mm	1200	1200	1200
Fork height lowered h13, mm	85	85	85
Fork width e, mm	160	170	170
Fork length l, mm	1500	1800	2000
Outside dimension of forks b1, mm	540	550	550

[1] PUR … Polyurethane

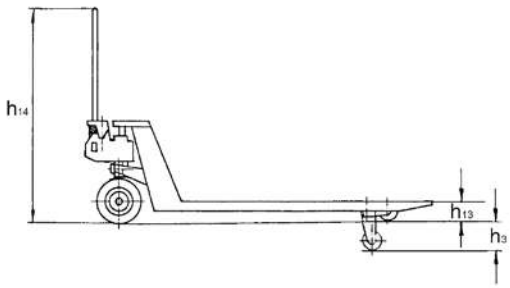

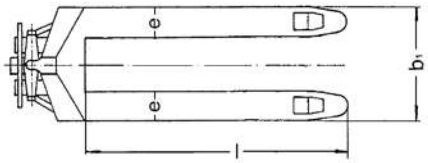

HU 20-115 QLTP PROLINE
Hand pallet truck with quick-lift

Capacity 2000 kg

For quick lifting and professional transportation of palletised goods and box pallets under demanding conditions.

Features

- Ergonomic safety control handle for one-hand operation of lifting, driving and lowering.
- Ergonomic rubber control handle for safe handling.
- Low maintenance high performance hydraulic pump with hard chromium plated piston and pressure relief valve.
- Quick-lift function for loads up to 200 kg for quick lifting of the load.
- Frame and forks in robust steel construction, adjustable connecting rods, especially hardened axles and the high quality powder coating ensure a long life expectancy.
- Steering angle of 105 degree to each side for easy handling in confined spaces.

Technical data HU 20-115 QLTP

Model	HU 20-115 QLTP
Art.-No.	N21225458
Capacity, kg	2000
Weight, kg	86
Tyre type[1]	VG/PUR
Steering rollers, mm	200 x 50
Load rollers, mm	82 x 70
Stroke h3, mm	115
Height of control handle h14, mm	1200
Fork height lowered h13, mm	85
Fork width e, mm	160
Fork length l, mm	1150
Outside dimension of forks b1, mm	540

[1]PUR … Polyurethane, VG … Solid rubber

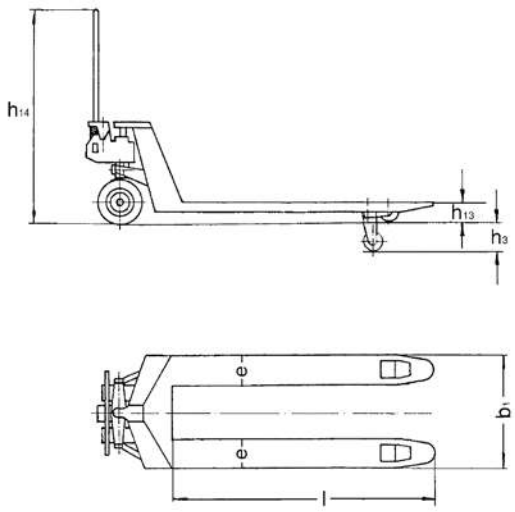

HU 25-115 FBTP PROLINE
Hand pallet truck
with driving and parking brake

Capacity 2500 kg

For the professional transportation of palletised goods and box pallets, on ramps, ascending slopes and on lorries.

Features

- Ergonomic safety control handle for one-hand operation of lifting, driving and lowering.
- Ergonomic rubber control handle for safe handling.
- Driving and park brake comfortably operated from the control handle.
- Low maintenance high performance hydraulic pump with hard chromium plated piston and pressure relief valve.
- Frame and forks in robust steel construction, adjustable connecting rods, especially hardened axles and the high quality powder coating ensure a long life expectancy.
- Steering angle of 105 degree to each side for easy handling in confined spaces.

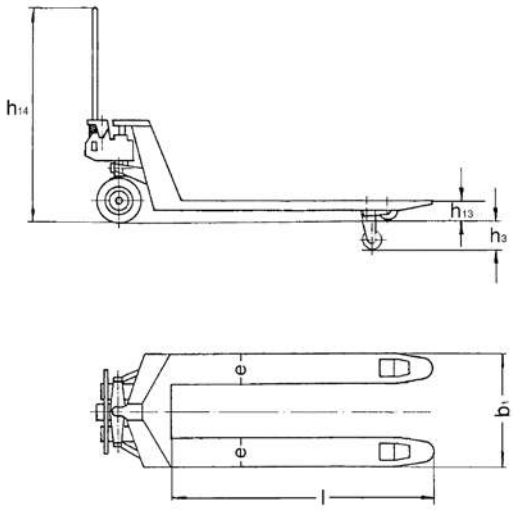

Technical data 25-115 FBTP

Model	HU 25-115 FBTP
Art.-No.	34527135
Capacity, kg	2500
Weight, kg	86
Tyre type[1]	VG/PUR
Steering rollers, mm	180 x 50
Load rollers, mm	82 x 70
Stroke h3, mm	115
Height of control handle h14, mm	1200
Fork height lowered h13, mm	85
Fork width e, mm	160
Fork length l, mm	1150
Outside dimension of forks b1, mm	540

[1]PUR … Polyurethane, VG … Solid rubber

HU 20-115 VATP PROLINE
Hand pallet truck
stainless steel version

Capacity 2000 kg

For the professional transportation of palletised goods in corrosive areas.

Features

- Ergonomic safety control handle for one-hand operation of lifting, driving and lowering.
- Low maintenance high performance hydraulic pump with hard chromium plated piston and pressure relief valve. Hydraulic unit made of stainless steel resp. bronze.
- Frame, adjustable connecting rods, bolts and the torsion tube are made of high quality stainless steel.
- Steering angle of 105 degree to each side for easy handling in confined spaces.

INFO

The operator is responsible for an analysis of the working conditions in order to assess the suitability of the hand pallet truck.

Technical data HU stainless steel version

Model	HU 20-115 VATP
Art.-No.	40005740
Material	V4A/316
Capacity, kg	2000
Weight, kg	86
Tyre type [1]	PA/PA
Steering rollers, mm	200 x 50
Load rollers, mm	82 x 70
Stroke h3, mm	115
Height of control handle h14, mm	1200
Fork height lowered h13, mm	85
Fork width e, mm	160
Fork length l, mm	1150
Outside dimension of forks b1, mm	540

[1] PA… Polyamide

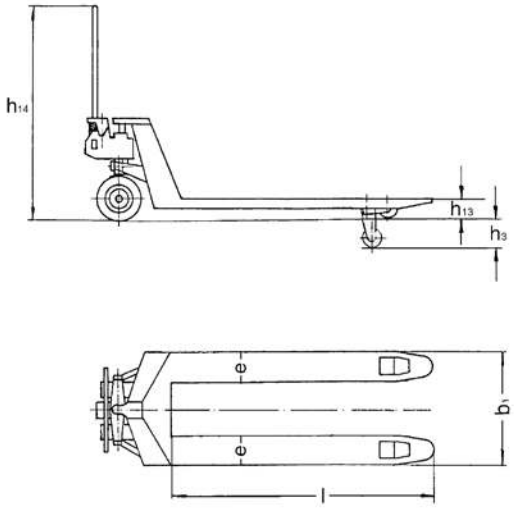

Ex-version available!
We are pleased to send you our new Atex catalogue in PDF format.

HU W-20 GL GREENLINE Hand pallet truck with weighing system

Capacity 2000 kg

For transportation and weighing of palletised goods and box pallets. For simple weighing jobs and a rough calculation of total weights, e.g. when loading lorries.

Features

- Ergonomic safety control handle for one-hand operation of lifting, driving and lowering
- Measuring range from 0 up to 2000 kg in 1 kg steps
- Easy to read LCD display
- Accuracy: 0.2 % of the end value

Scope of delivery

- Integrated battery and charger

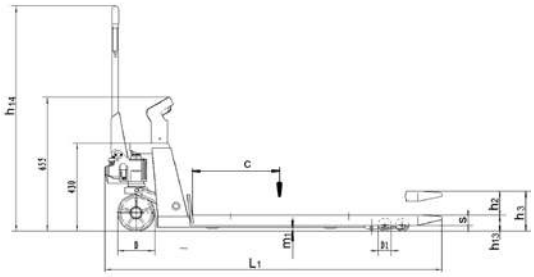

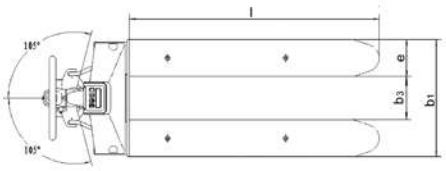

Technical data HU W 20 GL

Model	HU W 20 GL
Art.-No.	N21220630
Capacity, kg	2000
Load center c, mm	600
Weight, kg	110
Tyre type[1]	PUR / PUR
Steering rollers D, mm	200 x 50
Load rollers D1, mm	80 x 57
Number of wheels/load rollers	2/4
Stroke h2, mm	115
Lifting height h3, mm	200
Height of control handle h14, mm	1235
Fork height lowered h13, mm	85
Overall length L1, mm	1570
Fork height s, mm	50
Fork width e, mm	180
Fork length l, mm	1150
Outside dimension of forks b1, mm	555
Ground clearance m1, mm	35
Turning circle radius, mm	1330
Ambient temperature	-5 °C up to +40 °C

[1]PUR … Polyurethane

HU W-20 G GREENLINE
Hand pallet truck with weighing system

Capacity 2000 kg

For transportation and weighing of palletised goods and box pallets.

Features

- Ergonomic safety control handle for one-hand operation of lifting, driving and lowering.
- Large keypad for easy and convenient operation.
- Measuring range from 0 up to 2000 kg in 0.2 kg steps.
- Easy to read LCD display.
- Accuracy ± 0.1 % of the end value.
- Protection IP55

Scope of delivery

- Integrated battery and charger

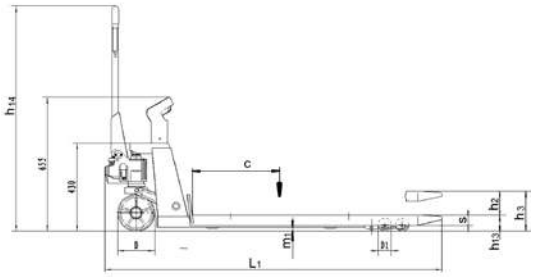

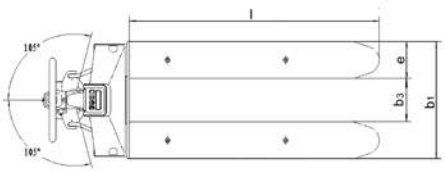

Technical data HU W-20 G

Model	HU W-20 G
Art.-No.	N21220640
Capacity, kg	2000
Load center c, mm	600
Weight, kg	115
Tyre type[1]	PUR/PUR
Steering rollers D, mm	200 x 50
Load rollers D1, mm	80 x 57
Number of wheels/load rollers	2/4
Stroke h2, mm	115
Lifting height h3, mm	200
Height of control handle h14, mm	1235
Fork height lowered h13, mm	85
Overall length L1, mm	1570
Fork height s, mm	50
Fork width e, mm	180
Fork length l, mm	1150
Outside dimension of forks b1, mm	555
Ground clearance m1, mm	35
Turning circle radius, mm	1330
Ambient temperature	-5°C up to +40°C

[1]PUR … Polyurethane

HU HS 10 B
Scissor pallet truck with manual-hydraulic lift

Capacity 1000 kg, Fork height max. 800 mm

A combination of hand pallet truck and elevating platform for the transport and raising of palletised loads to various departments.

Features

- Safety control handle with the functions: Quick-lift - lifting - lowering.
- Lowering speed can be finely metered for sensitive lowering of the load.
- One-stage hydraulic for increased robustness.
- Overload protection by pressure relief valve.
- Safety supports guarantee sure standing when the forks are raised.
- Low noise and smooth running with standard tyres: steer rollers and load rollers – polyurethane.

Technical data HU HS 10 B

Model	HU HS 10 B
Art.-No.	N26600020
Capacity Q, kg	1000
Load center c, mm	600
Weight, kg	122
Tyre type[1]	PUR/PUR
Steering rollers, mm	180 x 50
Load rollers, mm	75 x 50
Number of wheels/load rollers	2/2
Stroke h3, mm	715
Height of control handle max. h14, mm	1254
Fork height lowered h13, mm	85
Overall length l1, mm	1725
Overall width b1/b2, mm	575
Fork height s, mm	45
Fork width e, mm	160
Fork length l, mm	1170
Outside dimension of forks b5, mm	540
Ground clearance, wheelbase centre m2, mm	18
Aisle width pallet Ast, mm	1986
Turning circle radius Wa, mm	1564

[1] PUR … Polyurethane

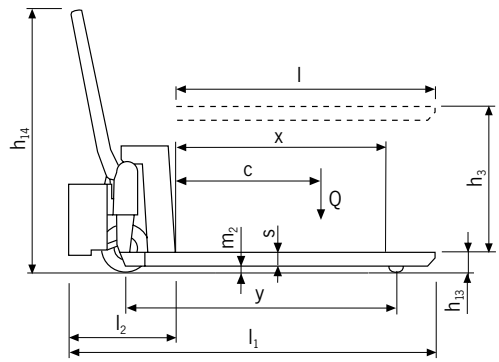

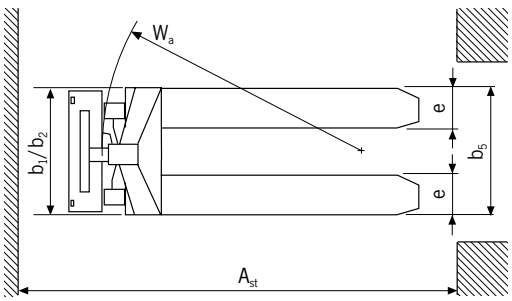

HU ES 10 B
Scissor pallet truck with electric-hydraulic lift

Capacity 1000 kg, Fork height max. 800 mm

The HU ES 10 B increases the usefulness of the HU HS 10 B by saving operating time for demanding applications with frequent lifting and lowering operations.

Features

- Ergonomic control button for the hydraulic unit fitted in the handle.
- In case of a battery failure the manual use of lifting and lowering is still guaranteed.
- Quick electric-hydraulic lifting of the load, pressure relief valve protects against overloading.
- Low noise and smooth running due to polyurethane steering and load rollers as standard.
- Additional tilting protection for the load rollers.

Scope of delivery

- Battery and integrated battery charger

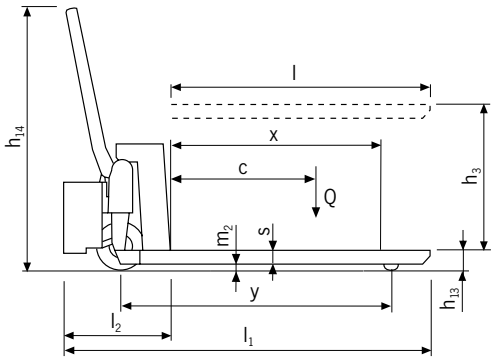

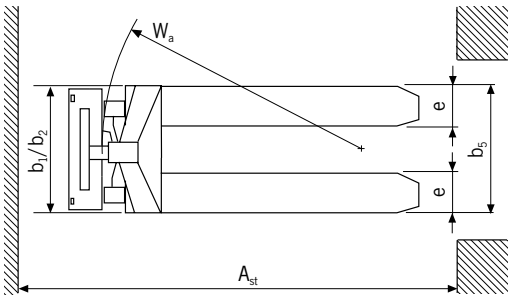

Technical data HU ES 10 B

Model	HU ES 10 B
Art.-No.	N26900020
Capacity Q, kg	1000
Load center c, mm	600
Weight, kg	152
Tyre type[1]	PUR/PUR
Steering rollers, mm	180 x 50
Load rollers, mm	75 x 50
Number of wheels/load rollers	2/2
Stroke h3, mm	715
Height of control handle max. h14, mm	1254
Fork height lowered h13, mm	85
Overall length l1, mm	1715
Overall width b1/b2, mm	575
Fork height s, mm	45
Fork width e, mm	160
Fork length l, mm	1170
Outside dimension of forks b5, mm	540
Ground clearance, wheelbase centre m2, mm	18
Aisle width pallet Ast, mm	1986
Turning circle radius Wa, mm	1564
Battery charger, V/A	220/6
Battery voltage, capacity K5, V/Ah	12/52

[1]PUR … Polyurethane

EGU 15 E *Li-ION*
Electric pallet truck

Capacity 1500 kg

Ideal for internal transport of palletised goods on even ground, covering short to medium distances.

The EGU 15 E is the new generation of electric pallet trucks. With its compact dimensions and new Lithium battery, it is an ideal alternative to the standard pallet truck and, with only 123 kg service weight the perfect driving device on a truck.
Supplied as standard with a replaceable battery the discharged battery can be exchanged with a fully charged battery within seconds, minimising the amount of disruption to the work cycle. Charging time for the battery is only 2.5 hours.

Features

- Maintenance-free rechargeable Lithium battery
- Integrated battery management system controls all important parameters and performance of the lithium battery.
- Charging time of only 2.5 hours, intermediate charge is possible
- Integrated PIN code panel with LCD display
- Curtis-Controller and CAN-Bus technology
- Infinitely variable driving speed
- External battery charger for charging with a 230 V plug socket
- Battery charge indicator and operating hour counter
- Entry rollers ensure smooth entry into bottom-boarded pallets

Scope of delivery

- Maintenance free rechargeable Lithium battery 24 Volt/20 Ah (30 or 36 Ah as option)
- External charger

Optional: replaceable battery with 20 Ah, 30 Ah or 36 Ah

Fast battery change – with a single touch

Li-ION Akku

This battery offers much longer operational periods and overall lifetime with shorter charges.

- The Li-ION battery has a lifespan of up to 3000 charging cycles.
- Charging time of only 2.5 hours.
- Intermediate charge is possible without affecting the lifetime of the battery.
- No loss of power when the battery charge state drops.

Technical data EGU 15 E Li-ION

Model	EGU 15 E *Li-ION*
Art.-No.	N23315461
Capacity, kg	1500
Tyre type wheels/load rollers[1]	PUR/PUR
Steering rollers l x d, mm	210 x 70
Load rollers l x d, mm	80 x 93
Number of wheels/load rollers (x=driven)	2 + 1x/4
Stroke h3, mm	115
Load center c, mm	600
Fork height max., mm	195
Fork height lowered h13, mm	85
Height of control handle h14, mm	1160
Overall length l1, mm	1530
Overall width b1, mm	540
Fork dimensions s/e/l, mm	47 x 160 x 1150
Outside dimension of forks b5, mm	540
Aisle width pallet Ast, mm	2000
Turning circle radius Wa, mm	1330
Actuation	electric
Operation	pedestrian
Travel speed with/without load, km/h	4.6/4.8
Lifting speed with/without load, m/s	0.020/0.025
Lowering speed with/without load, m/s	0.05/0.04
Gradient with/without load, %	5/10
Drive motor rating, kW	0.65
Hoist motor rating, kW	0.5
Service brake	electric
Battery	Li-ION
Battery voltage, V/Ah	24/20
Weight with battery, kg	123

[1]PUR … Polyurethane

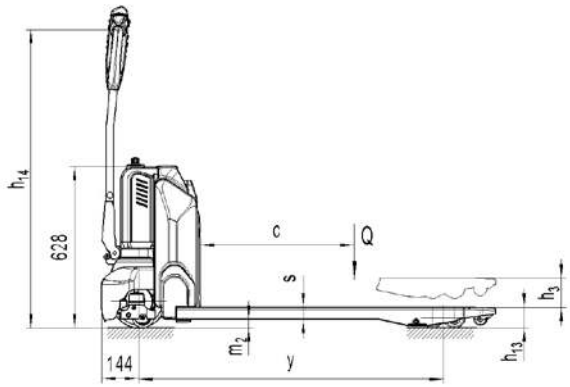

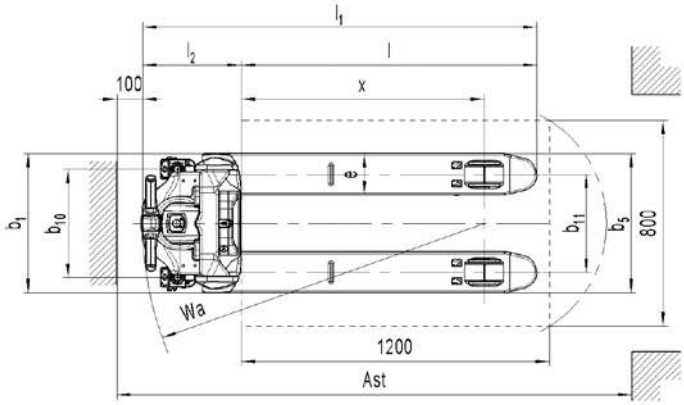

EGU PS 14
Electric pallet truck

Capacity 1400kg

Electrical drive, electrical lifting

Ideal for the transportation of palletised goods within a warehouse environment.
Due to the extremely small turning circle it is also ideal for working on ramps or taking along on a lorry. The powerful motor allows fast operation.

The truck is available in three versions:
EGU PS 14 Basic
EGU PS 14 Plus und
EGU PS 14 *Li-ION*

Features

- Reduced dimensions: L2 only 410 mm.
- Creep speed button for pin-point work in confined spaces
- Reliable impulse control for stepless regulation of driving speed
- Integrated battery charger for charging on a 230 V plug socket
- Digital display for battery status

EGU PS 14 Basic

The unit is supplied with a DC traction motor and a tubular steel drawbar with integrated controls. The Basic version is the entry level model.

EGU PS 14 Plus

The Plus Version with the powerful Gel battery gives a plus in capacity and a longer battery life. The Plus also includes a maintenance-friendly AC traction motor with reduced power consumption and higher driving speed. The ergonomically designed multifunctional drawbar contains all operating and control functions, such as hour meter and charging indicator.

EGU PS 14 *Li-ION*

These versions offers much longer operational periods and overall lifetime of the battery with shorter charges.

- The Li-ION battery has a lifespan of up to 3000 charging cycles.
- Charging time of only 2.5 hours.
- Intermediate charge is possible without affecting the lifetime of the battery.
- No loss of power when the battery charge state drops.

Technical data EGU PS 14

Model	EGU PS 14 Basic	EGU PS 14 Plus	EGU PS 14 *Li-ION*
Art.-No.	192062096	192062097	192062098
Capacity, kg	1400	1400	1400
Tyre type wheels/load rollers[1]	VG/PUR	VG/PUR	VG/PUR
Steering rollers l x d, mm	250 x 76 + 100 x 40	250 x 76 + 100 x 40	250 x 76 + 100 x 40
Load rollers l x d, mm	82 x 80	82 x 80	82 x 80
Number of wheels/load rollers (x=driven)	2 + 1x/2	2 + 1x/2	2 + 1x/2
Wheelbase Y, mm	1196	1196	1196
Stroke h2, mm	115	115	115
Load center c, mm	600	600	600
Fork height max. h3, mm	200	200	200
Fork height lowered, mm	85	85	85
Height of control handle max., mm	1230	1230	1230
Overall length L, mm	1560	1560	1560
Length incl. apron L2, mm	410	410	410
Overall width B, mm	720	720	720
Fork dimensions s1/n/l, mm	50 x 150 x 1150	50 x 150 x 1150	50 x 150 x 1150
Outside dimension of forks m, mm	525	525	525
Aisle width pallet Ast, mm	1810	1810	1810
Turning circle radius Wa, mm	1345	1345	1345
Actuation	electric	electric	electric
Operation	pedestrian	pedestrian	pedestrian
Travel speed with/without load, km/h	4.4/4.8	6.0/6.0	6.0/6.0
Lifting speed with/without load, m/s	0.03/0.04	0.03/0.04	0.03/0.04
Lowering speed with/without load, m/s	0.05/0.04	0.05/0.04	0.05/0.04
Gradient with/without load, %	5/10	5/10	5/10
Drive motor rating, kW	0.7	0.7	0.7
Hoist motor rating, kW	1.0	1.0	1.0
Service brake	electric	electric	electric
Battery	starter	Gel	Li-ION
Battery voltage 20 h, in V/Ah	24/70	24/65	24/50
Weight with battery, kg	227	256	212

[1]VG … Solid rubber, PUR … Polyurethane

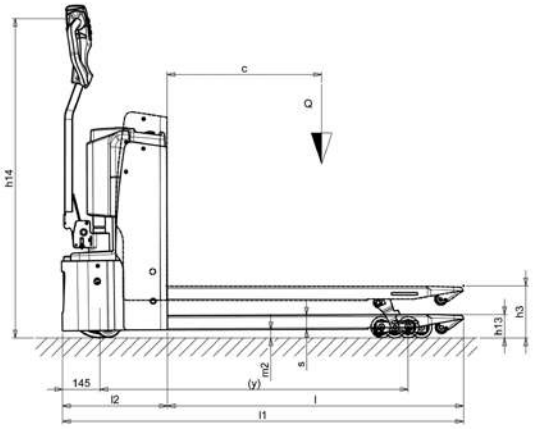

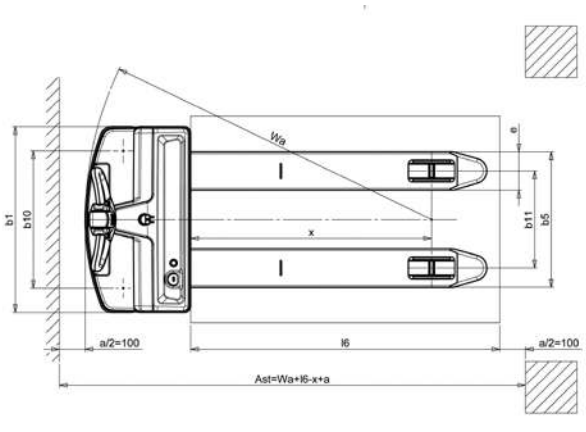

Our top seller with over half a million units sold!

Ergonomically designed control handle with rubber coating for better grip

Infinitely variable lowering speed

Reinforced construction for greater stability

Fork entry rollers make easy entry into the wide side of Euro pallets

Galvanized, maintenance-friendly, and extremely durable hydraulic unit with integral reservoir. The enclosed hydraulic system protects against damage.

5 different tyre combinations to suit all your needs

HV 0516
Manual drive stacker

Capacity 500 kg

Ideal for the occasional, internal application of stacking and transporting of palletised goods, loading and unloading of shelves and lorries.

Features

- Ergonomic safety control handle for one-hand operation of lifting, driving and lowering.
- Handlebars for easy operation.
- Lowering speed can be finely metered for sensitive lowering of the load.
- Single-acting hand pump with increased lift per handle stroke.
- Robust mast construction with hard chromium plated piston.
- Steering roller with brake for safe parking of the hand stacker.

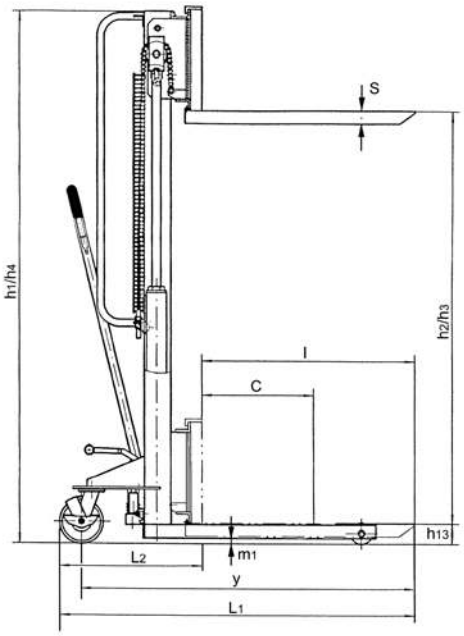

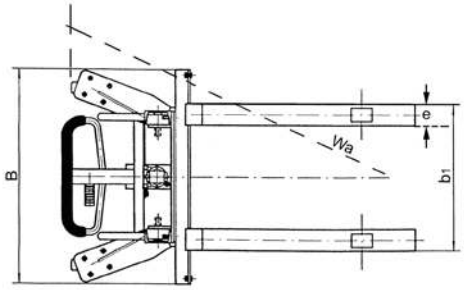

Technical data HV 0516

Model	HV 0516
Art.-No.	40005551
Capacity, kg	500
Load center c, mm	600
Wheelbase y, mm	1630
Weight, kg	160
Tyre type[1]	PA/PUR
Steering rollers, mm	145 x 40
Load rollers, mm	80 x 35
Number of wheels/load rollers	2/2
Height, mast retracted h1, mm	1960
Freelift h2, mm	1520
Stroke h3, mm	1520
Height, mast extended h4, mm	2000
Lifting height max. h3 + h13, mm	1600
Fork height lowered h13, mm	90
Overall length L1, mm	1750
Length incl. apron L2, mm	480
Overall width B, mm	830
Fork height s, mm	50
Fork width e, mm	120
Fork length l, mm	1150
Outside dimension of forks adjustable up to b1, mm	270/810
Ground clearance m1, mm	25
Turning circle radius Wa, mm	1500
Lift per one crank rotation with/without load, mm	20/45

[1]PA… Polyamide, PUR … Polyurethane

HV 1008 and HV 1016
Manual drive stacker

Capacity 1000 kg

Ideal for the occasional, internal application of stacking and transporting of palletised goods.

Features

- Ergonomic safety control handle for one-hand operation of lifting, driving and lowering.
- Easy handling due to forced steering rollers.
- Lowering speed can be finely metered for sensitive lowering of the load.
- Single-acting hand pump with increased lift per handle stroke.
- Quick-lift for loads up to 100 kg.
- Robust mast construction with hard chromium plated piston.
- Steering roller with brake for safe parking of the hand stacker.

Technical data HV 1008 und HV 1016

Model	HV 1008	HV 1016
Art.-No.	34518032	34518030
Capacity, kg	1000	1000
Load center c, mm	600	600
Wheelbase y, mm	1075	1075
Weight, kg	179	205
Tyre type[1]	PUR/PUR	PUR/PUR
Steering rollers, mm	180 x 50	180 x 50
Load rollers, mm	80 x 55	80 x 55
Number of wheels/load rollers	2/2	2/2
Height, mast retracted h1, mm	1300	1965
Freelift h2, mm	810	1510
Stroke h3, mm	810	1510
Height, mast extended h4, mm	1300	1965
Lifting height max. h3 + h13, mm	900	1600
Fork height lowered h13, mm	90	90
Overall length L1, mm	1675	1675
Length incl. apron L2, mm	552	552
Overall width B, mm	765	765
Fork height s, mm	60	60
Fork width e, mm	60	60
Fork length l, mm	1122	1122
Outside dimension of forks b1, mm	570	570
Ground clearance m1, mm	25	25
Aisle width pallet Ast, mm	1875	1875
Turning circle radius Wa, mm	1445	1445
Lift per one crank rotation with/without load, mm	17/50	17/50

[1]PUR … Polyurethane

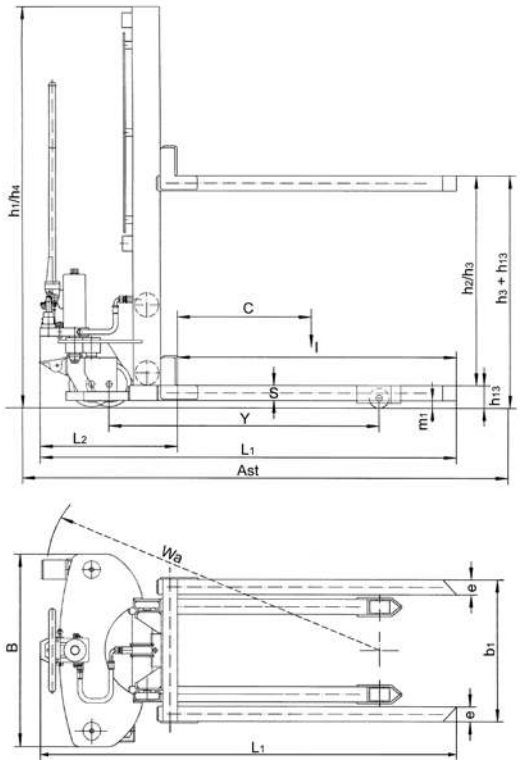

EHH PSE
Manual drive stacker with electric-hydraulic lift, manually movable

Capacity 1000 kg, Fork height max. 3000 mm

Suitable for occasional applications of stacking and transporting palletised loads, also for use in confined areas and for short distances.

Features

- Good maneuverability and easy handling due to positive steering of the unit.
- Compact electric-hydraulic lifting device and overload protection.
- Finely metered lowering of load through pressure relief valve and adjustable lowering valve.
- Retention by parking brake.
- Robust frame with two load and two steer rollers
- The maintenance free battery can be charged at any 230 V plug socket.

Scope of delivery

- Battery and battery charger included.

Technical data EHH PSE

Model	EHH PSE 1016	EHH PSE 1025	EHH PSE 1030
Art.-No.	40050660	40050661	40050662
Capacity (up to 2.5 m lift), kg	1000	1000	1000
Load center c, mm	600	600	600
Wheelbase y, mm	1160	1160	1160
Weight (with battery), kg	395	455	475
Tyre type [1]	PA/PUR	PA/PUR	PA/PUR
Steering rollers, mm	180 x 50	180 x 50	180 x 50
Load rollers, mm	74 x 70	74 x 70	74 x 70
Number of wheels/load rollers	2/4	2/4	2/4
Height, mast retracted h1, mm	1980	1830	2080
Freelift h2, mm	1415	–	–
Stroke h3, mm	1515	2415	2915
Height, mast extended h4, mm	2030	3020	3515
Lifting height max. h3 + h13, mm	1600	2500	3000
Fork height lowered h13, mm	85	85	85
Overall length L1, mm	1720	1720	1720
Length incl. apron L2, mm	555	555	555
Overall width b1/b2, mm	765	765	765
Fork height s, mm	60	60	60
Fork width e, mm	180	180	180
Fork length l, mm	1100	1100	1100
Outside dimension of forks b5, mm	570	570	570
Ground clearance m2, mm	25	25	25
Aisle width pallet Ast, mm	2145	2145	2145
Turning circle radius Wa, mm	1280	1280	1280
Lifting speed with/without load, m/s	0.08/0.13	0.08/0.13	0.08/0.13
Lowering speed with/without load, m/s	0.42/0.19	0.42/0.19	0.42/0.19
Hoist motor rating, kW	1.5	1.5	1.5
Battery according to DIN 43531	semi traction battery	semi traction battery	semi traction battery
Battery charger, V/A	12/20 A	12/20 A	12/20 A
Battery voltage capacity, V/Ah	12/130	12/130	12/130

[1] PA … Polyamide, PUR … Polyurethane

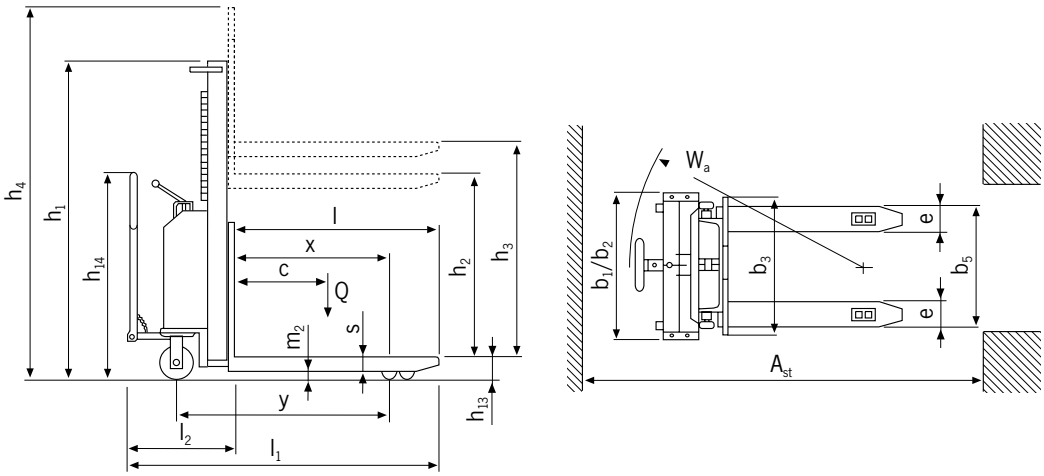

EHH PS
Manual drive stacker with electric-hydraulic lift, manually movable

Capacity 1000 - 1200 kg, Fork height max. 3500 mm

Suitable for occasional to medium applications of stacking and transporting palletised loads, also in confined areas.

Features

- Easy to operate via tie-rod guides to both steer wheels.
- Compact electric-hydraulic lifting device and overload protection.
- Finely metered lowering of load through pressure relief valve and adjustable lowering valve.
- Mast welded from precision profiles, fork carriage with maintenance free guide rollers.
- Retention by parking brake.
- Robust frame with two load and two steer rollers

Scope of delivery

- Battery and battery charger included.

Technical data EHH PS

Model	EHH PS 1009	EHH PS 1016	EHH PS 1225	EHH PS 1229	EHH PS 1235
Art.-No.	40046051	40044422	40044424	40044425	40044426
Capacity (up to 2.5 m lift), kg	1000	1000	1200	1200	1200
Load center c, mm	600	600	600	600	600
Wheelbase y, mm	965	965	1155	1155	1155
Weight (with battery), kg	296	311	433	449	496
Tyre type[1]	VG/PA	VG/PA	PUR/PA	PUR/PA	PUR/PA
Steering rollers, mm	200 x 50	200 x 50	200 x 50	200 x 50	200 x 50
Load rollers, mm	82 x 70	82 x 70	82 x 70	82 x 70	82 x 70
Number of wheels/load rollers	2/2	2/2	2/2	2/2	2/2
Height, mast retracted h1, mm	1300	1970	1780	1980	2250
Freelift h2, mm	810	1510	-	-	80
Stroke h3, mm	810	1510	2410	2810	3410
Height, mast extended h4, mm	1300	1970	2985	3385	3915
Lifting height max. h3 + h13, mm	900	1600	2500	2900	3500
Fork height lowered h13, mm	90	90	90	90	90
Overall length L1, mm	1750	1750	1850	1850	1850
Length incl. apron L2, mm	600	600	700	700	700
Overall width b1/b2, mm	750	750	850	850	850
Fork height s, mm	70	70	70	70	70
Fork width e, mm	150	150	150	150	150
Fork length l, mm	1150	1150	1150	1150	1150
Outside dimension of forks b5, mm	560	560	560	560	560
Ground clearance m2, mm	20	20	20	20	20
Aisle width pallet Ast, mm	2210	2210	2375	2375	2375
Turning circle radius Wa, mm	1440	1440	1760	1760	1760
Lifting speed with/without load, m/s	0.09/0.12	0.09/0.12	0.08/0.12	0.08/0.12	0.08/0.12
Lowering speed with/without load, m/s	0.4/0.1	0.4/0.1	0.4/0.1	0.4/0.1	0.4/0.1
Hoist motor rating, kW	1,6	1.6	2.2	2.2	2.2
Battery according to DIN 43531	starter	starter	starter	starter	starter
Battery charger, V/A	12/10	12/10	12/10	12/10	12/10
Battery voltage capacity, V/Ah	12/74	12/74	24/74	24/74	24/74

[1] PA … Polyamide, PUR … Polyurethane, VG … Solid rubber

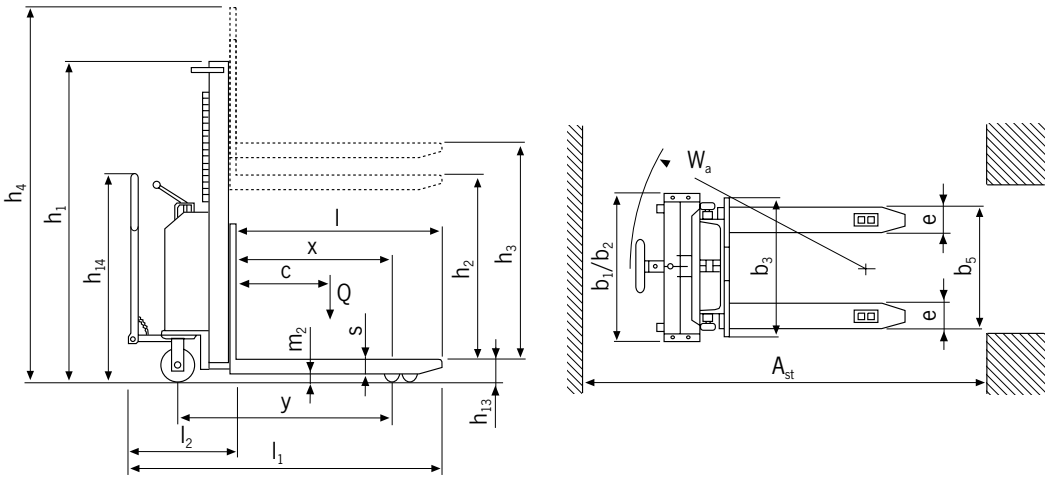

EGV PSL 1016 II
Electric pedestrian stacker

Capacity 1000 kg,
Fork height max. 1600 mm

The EGV PSL 1016 II is the ideal solution for indoor transportation and of palletised goods within a warehouse environment for short haul and medium work load applications.

Features

- The slim single mast and the laterally, ergonomic tiller ensure a free view onto the goods as in front of the stacker.
- The fork thickness of 60 mm enables an easier entrance inside pallets, while working in elevation.
- Easy maintenance – the convenient access opening at the bottom of the forklift allows an immediate disassembly of motor wheel without lifting the machine.
- The reduced overall width of 794 mm improves the handling of goods in narrow spaces and corridors.
- Ultra-slow drive function enables exact driving in very tight spaces.
- Gel battery as standard.

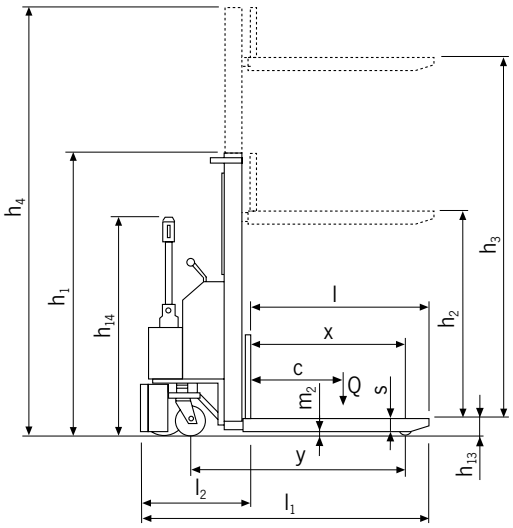

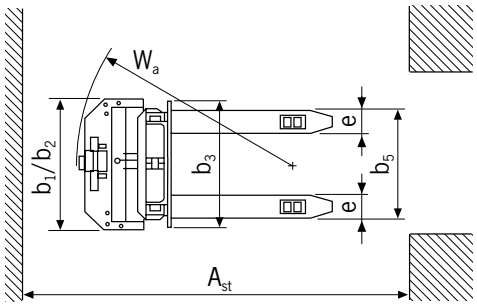

Technical data EGV PSL 1016 II

Model	EGV PSL 1016 II
Art.-No.	192021784
Capacity (up to 2.5 m lift), kg	1000
Steering rollers, mm	186 x 50 + 125 x 45
Load rollers, mm	82 x 70
Height, mast retracted h1, mm	1970
Freelift h2, mm	1510
Stroke, mm	1510
Height, mast extended h4, mm	1970
Fork height max. h3, mm	1600
Fork height lowered h13, mm	90
Overall length L1, mm	1675
Overall width b1/b2, mm	794
Fork height s, mm	60
Fork width e, mm	150
Fork length l, mm	1153
Outside dimension of forks b5, mm	560
Travel speed with/without load, km/h	3.7/4.3
Lifting speed with/without load, m/s	0.11/0.18
Lowering speed with/without load, m/s	0.18/0.18
Drive motor rating, kW	0.35
Hoist motor rating, kW	2.2
Battery	Gel
Battery charger, V/A	24/12
Battery voltage, V/Ah	24/50

EGV PSL II
Electric pedestrian stacker

Capacity 1200 kg,
Fork height max. 3500 mm

The revised EGV PSL II is the ideal solution for indoor transportation and of palletized goods within a warehouse environment for short haul and medium work load applications.

Features

- The wide mast and the laterally, ergonomic tiller ensure a free view onto the goods as in front of the stacker.
- All functions are comfortably controlled from the tiller head.
- The reduced overall width of 800 mm improves the handling of goods in narrow spaces and corridors.
- Ultra-slow drive function enables exact driving in very tight spaces.
- Easy maintenance – the convenient access opening at the bottom of the forklift allows an immediate disassembly of motor wheel without lifting the machine.
- Improved drive- and lifting speed.
- The spiral charging cable which can be stored in the chassis enables easy charging at every socket.

Optional

Plus version

- Maintenance-free Gel batteries with increased working hours and a doubled lifetime expectancy.
- Finely metered lifting and lowering due to a soft valve control.
- Faster lowering speed.

Freelift version

- The EGV PSL 1229 II plus Freelift has a fullfreelift. It can lift the forks up to 1500 mm without increasing the base mast height.

Scope of delivery

- Battery and battery charger included.

Technical data EGV PSL II

Model	EGV PSL 1225 II	EGV PSL 1229 II	EGV PSL 1235 II
Art.-No.	192033602	192033615	192033616
Actuation	electric	electric	electric
Operation	pedestrian	pedestrian	pedestrian
Capacity (up to 2.5 m lift), kg	1200	1200	1200
Load center c, mm	600	600	600
Wheelbase y, mm	1234	1234	1234
Weight (with battery), kg	568	583	616
Tyre type [1]	PUR/VG + PUR	PUR/VG + PUR	PUR/VG + PUR
Steering rollers, mm	250 x 76 + 100 x 38	250 x 76 + 100 x 38	250 x 76 + 100 x 39
Load rollers, mm	82 x 70	82 x 70	82 x 70
Number of wheels/load rollers (x=driven)	1x + 1/2	1x + 1/2	1x + 1/2
Height, mast retracted h1, mm	1787	1987	2250
Freelift h2, mm	–	–	80
Stroke, mm	2410	2810	3410
Height, mast extended h4, mm	2992	3392	3916
Fork height max. h3, mm	2500	2900	3500
Height of control handle min./max. h14, mm	915/1310	915/1310	915/1310
Fork height lowered h13, mm	90	90	90
Overall length L1, mm	1760	1760	1760
Length incl. apron L2, mm	609	609	609
Overall width b1/b2, mm	800	800	800
Fork height s, mm	70	70	70
Fork width e, mm	150	150	150
Fork length l, mm	1150	1150	1150
Outside dimension of forks b5, mm	560	560	560
Ground clearance m2, mm	20	20	20
Aisle width pallet Ast, mm	2210	2210	2210
Turning circle radius Wa, mm	1430	1430	1430
Travel speed with/without load, km/h	4.7/5.2	4.7/5.2	4.7/5.2
Lifting speed with/without load, m/s	0.11/0.19	0.11/0.19	0.11/0.19
Lowering speed with/without load, m/s	0.12/0.15	0.12/0.15	0.12/0.15
Gradient with/without load, %	5/10	5/10	5/10
Service brake	electric	electric	electric
Drive motor rating, kW	0.7	0.7	0.7
Hoist motor rating, kW	2.2	2.2	2.2
Battery	starter	starter	starter
Battery charger, V/A	24/13	24/13	24/13
Battery voltage, V/Ah	24/85	24/85	24/85

[1] PUR … Polyurethane, VG … Solid rubber

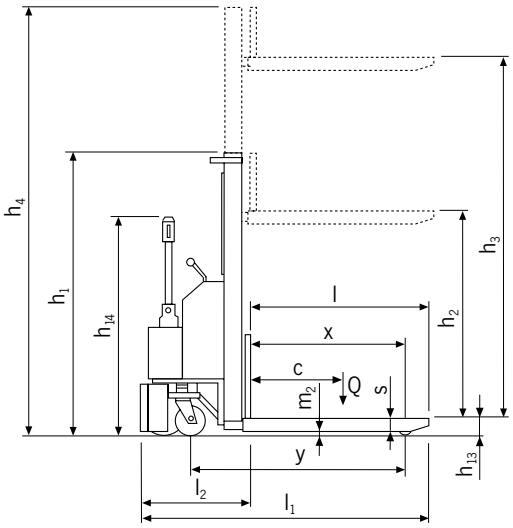

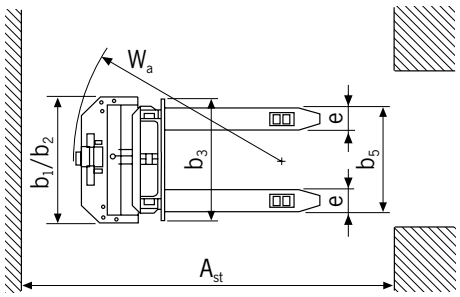

Technical data EGV PSL II plus und EGV PSL II plus Freelift

Model	EGV PSL 1225 II plus	EGV PSL 1229 II plus	EGV PSL 1235 II plus	EGV PSL 1229 II plus Freelift
Art.-No.	192033617	192033618	192033620	192033621
Actuation	electric	electric	electric	electric
Operation	pedestrian	pedestrian	pedestrian	pedestrian
Capacity (up to 2.5 m lift), kg	1200	1200	1200	1200
Load center c, mm	600	600	600	600
Wheelbase y, mm	1234	1234	1234	1234
Weight (with battery), kg	648	663	696	693
Tyre type [1]	PUR/VG + PUR	PUR/VG + PUR	PUR/VG + PUR	PUR/VG + PUR
Steering rollers, mm	250 x 76 + 100 x 40	250 x 76 + 100 x 41	250 x 76 + 100 x 42	250 x 76 + 100 x 43
Load rollers, mm	82 x 70	82 x 70	82 x 70	82 x 70
Number of wheels/load rollers (x=driven)	1x + 1/2	1x + 1/2	1x + 1/2	1x + 1/2
Height, mast retracted h1, mm	1787	1987	2250	1965
Freelift h2, mm	0	0	80	1402
Stroke, mm	2410	2810	3410	2810
Height, mast extended h4, mm	2992	3392	3916	3372
Fork height max. h3, mm	2500	2900	3.500	2900
Height of control handle min./max. h14, mm	915/1310	915/1310	915/1310	915/1310
Fork height lowered h13, mm	90	90	90	90
Overall length L1, mm	1760	1760	1760	1760
Length incl. apron L2, mm	609	609	609	609
Overall width b1/b2, mm	800	800	800	800
Fork height s, mm	70	70	70	70
Fork width e, mm	150	150	150	150
Fork length l, mm	1150	1150	1150	1150
Outside dimension of forks b5, mm	560	560	560	560
Ground clearance m2, mm	20	20	20	20
Aisle width pallet Ast, mm	2210	2210	2210	2210
Turning circle radius Wa, mm	1430	1430	1430	1430
Travel speed with/without load, km/h	4.7/5.2	4.7/5.2	4.7/5.2	4.7/5.2
Lifting speed with/without load, m/s	0.11/0.19	0.11/0.19	0.11/0.19	0.11/0.19
Lowering speed with/without load, m/s	0.19/0.19	0.19/0.19	0.19/0.19	0.16/0.14
Gradient with/without load, %	5/10	5/10	5/10	5/10
Service brake	electric	electric	electric	electric
Drive motor rating, kW	0.7	0.7	0.7	0.7
Hoist motor rating, kW	2.2	2.2	2.2	2.2
Battery	Gel	Gel	Gel	Gel
Battery charger, V/A	24/13	24/13	24/13	24/13
Battery voltage, V/Ah	24/105	24/105	24/105	24/105

[1] PUR … Polyurethane, VG … Solid rubber

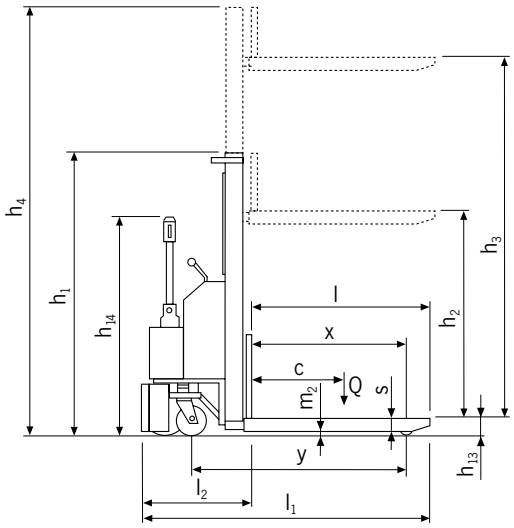

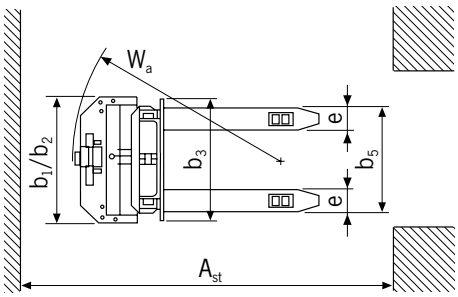

EGV PSH II
Electric pedestrian stacker

Capacity 1200 - 1600 kg,
Fork height max. 5000 mm

The revised edition of the model range EGV PSH II is the professional solution for indoor transportation and stacking of palletised loads over longer distances and higher capacity utilization.

Features

- Multifunctional control handle with integrated drive switches and lifting and lowering functions directly on the control handle.
- Proportionally controllable lifting and lowering functions for better positioning of the loads.
- Compact overall dimensions, only 800 mm wide allows operations in narrow corridors.
- Ultra-slow drive function enables exact driving in very tight spaces.
- Drive and lifting speeds have been increased for this revised model.

Optional

- Drivers platform
- Freelift

INFO

Battery and battery charger are to be ordered separately.

Technical data EGV PSH 12 II

Model	EGV PSH 12-16 II	EGV PSH 12-25 II	EGV PSH 12-29 II	EGV PSH 12-35 II
Art.-No.	N25412161	N25412251	N25412291	N25412351
Actuation	electric	electric	electric	electric
Operation	pedestrian	pedestrian	pedestrian	pedestrian
Capacity (up to 2.5 m lift), kg	1200	1200	1200	1200
Load center c, mm	600	600	600	600
Wheelbase y, mm	1307	1307	1307	1307
Weight (with battery 180 Ah), kg	841	900	915	937
Tyre type[1]	PUR/VG + PUR	PUR/VG + PUR	PUR/VG + PUR	PUR/VG + PUR
Steering rollers, mm	250 x 101 + 100 x 38	250 x 101 + 100 x 38	250 x 101 + 100 x 38	250 x 101 + 100 x 38
Load rollers, mm	82 x 70	82 x 70	82 x 70	82 x 70
Number of wheels/load rollers (x=driven)	1x + 2/4	1x + 2/4	1x + 2/4	1x + 2/4
Height, mast retracted h1, mm	1965	1785	1987	2265
Freelift h2, mm	1510	–	–	80
Stroke, mm	1510	2410	2810	3410
Height, mast extended h4, mm	1965	2990	3392	3970
Fork height max. h3, mm	1600	2500	2900	3500
Height of control handle max. h14, mm	1390	1390	1390	1390
Fork height lowered h13, mm	90	90	90	90
Overall length L1, mm	1920	1920	1920	1920
Length incl. apron L2, mm	770	770	770	770
Overall width b1/b2, mm	800	800	800	800
Fork height s, mm	70	70	70	70
Fork width e, mm	150	150	150	150
Fork length l, mm	1150	1150	1150	1150
Outside dimension of forks b5, mm	560	560	560	560
Ground clearance, mm	20	20	20	20
Aisle width pallet Ast, mm	2169	2169	2169	2169
Turning circle radius Wa, mm	1550	1550	1550	1550
Travel speed with/without load, km/h	6/6	6/6	6/6	6/6
Lifting speed with/without load, m/s	0.12/0.17	0.12/0.17	0.12/0.17	0.12/0.17
Lowering speed with/without load, m/s	0.22/0.12	0.22/0.12	0.22/0.12	0.22/0.12
Gradient with/without load, %	5/10	5/10	5/10	5/10
Service brake	electric	electric	electric	electric
Drive motor rating, kW	1.2	1.2	1.2	1.2
Hoist motor rating, kW	3.2	3.2	3.2	3.2
Battery[2]	PzS	PzS	PzS	PzS
Battery voltage, V/Ah	24/225-300	24/225-300	24/225-300	24/225-300
Battery weight, kg	270	270	270	270
Type of control	impulse	impulse	impulse	impulse

[1] PUR … Polyurethane, VG … Solid rubber
[2] PzS … Traction battery

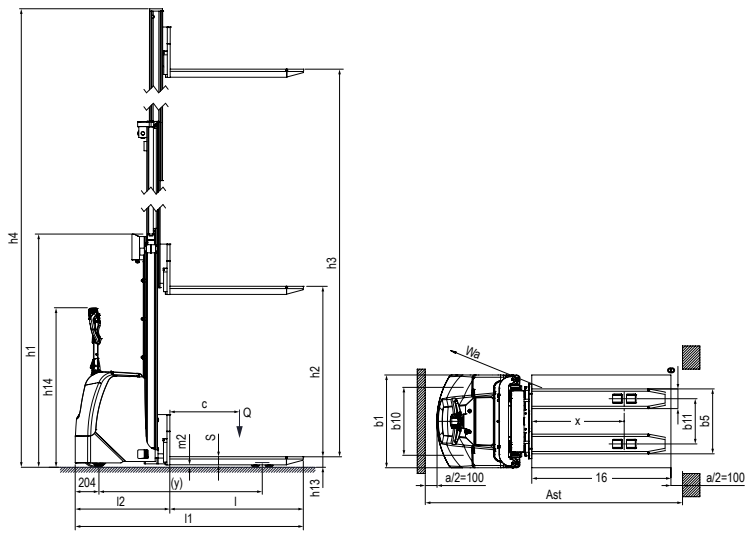

Technical data EGV PSH 14 II

Model	EGV PSH 14-45T II	EGV PSH 14-45TF II	EGV PSH 14-50T II
Art.-No.	N25414453	N25414455	N25414503
Actuation	electric	electric	electric
Operation	pedestrian	pedestrian	pedestrian
Capacity (up to 2.5 m lift), kg	1400	1400	1400
Load center c, mm	600	600	600
Wheelbase y, mm	1370	1370	1370
Weight (with battery 180 Ah), kg	1190	1223	1229
Tyre type [1]	PUR/VG + PUR	PUR/VG + PUR	PUR/VG + PUR
Steering rollers, mm	250 x 101 + 100 x 38	250 x 101 + 100 x 38	250 x 101 + 100 x 38
Load rollers, mm	82 x 70	82 x 70	82 x 70
Number of wheels/load rollers (x=driven)	1x + 2/4	1x + 2/4	1x + 2/4
Height, mast retracted h1, mm	2080	2089	2285
Freelift h2, mm	–	1470	–
Stroke, mm	4410	4410	5025
Height, mast extended h4, mm	5020	5029	5635
Fork height max. h3, mm	4500	4500	5115
Height of control handle max. h14, mm	1390	1390	1390
Fork height lowered h13, mm	90	90	90
Overall length L1, mm	1966	1966	1966
Length incl. apron L2	816	816	816
Overall width b1/b2, mm	800	800	800
Fork height s, mm	70	70	70
Fork width e, mm	170	170	170
Fork length l, mm	1150	1150	1150
Outside dimension of forks b5, mm	560	560	560
Ground clearance, mm	20	20	20
Aisle width pallet Ast, mm	2389	2389	2389
Turning circle radius Wa, mm	1613	1613	1613
Travel speed with/without load, km/h	6/6	6/6	6/6
Lifting speed with/without load, m/s	0.14/0.28	0.14/0.28	0.14/0.28
Lowering speed with/without load, m/s	0.34/0.40	0.34/0.40	0.34/0.40
Gradient with/without load, %	5/10	5/10	5/10
Service brake	electric	electric	electric
Drive motor rating, kW	1.2	1.2	1.2
Hoist motor rating, kW	3.2	3.2	3.2
Battery[2]	PzS	PzS	PzS
Battery voltage, V/Ah	24/300 [3]	24/300 [3]	24/300 [3]
Battery weight, kg	270	270	270
Type of control	impulse	impulse	impulse

[1] PUR … Polyurethane, VG … Solid rubber
[2] PzS … Traction battery
[3] Unit only supplied with 300 Ah battery

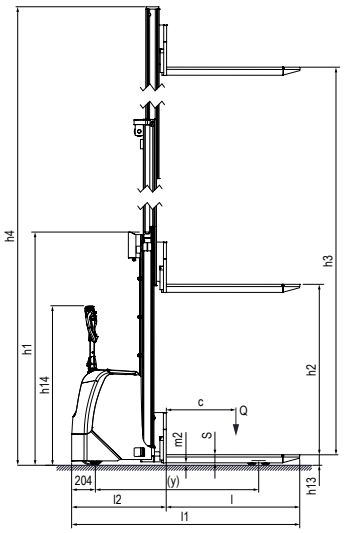

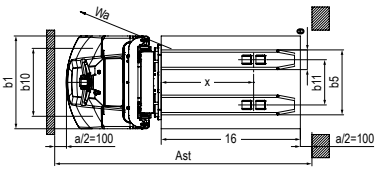

Technical data EGV PSH 16 II

Model	EGV PSH 16-16 II	EGV PSH 16-25 II	EGV PSH 16-29 II	EGV PSH 16-35 II
Art.-No.	N25416161	N25416251	N25416291	N25416351
Actuation	electric	electric	electric	electric
Operation	pedestrian	pedestrian	pedestrian	pedestrian
Capacity (up to 2.5 m lift), kg	1600	1600	1600	1600
Load center c, mm	600	600	600	600
Wheelbase y, mm	1370	1370	1370	1370
Weight (with battery 180 Ah), kg	920	1025	1050	1090
Tyre type [1]	PUR/VG + PUR	PUR/VG + PUR	PUR/VG + PUR	PUR/VG + PUR
Steering rollers, mm	250 x 101 + 100 x 38	250 x 101 + 100 x 38	250 x 101 + 100 x 38	250 x 101 + 100 x 38
Load rollers, mm	82 x 70	82 x 70	82 x 70	82 x 70
Number of wheels/load rollers (x=driven)	1x + 2/4	1x + 2/4	1x + 2/4	1x + 2/4
Height, mast retracted h1, mm	1965	1765	1965	2265
Freelift h2, mm	1510	–	–	–
Stroke, mm	1510	2410	2810	3410
Height, mast extended h4, mm	1965	2970	3370	3970
Fork height max. h3, mm	1600	2500	2900	3500
Height of control handle max. h14, mm	1390	1390	1390	1390
Fork height lowered h13, mm	90	90	90	90
Overall length L1, mm	1944	1944	1944	1944
Length incl. apron L2, mm	795	795	795	795
Overall width b1/b2, mm	800	800	800	800
Fork height s, mm	70	70	70	70
Fork width e, mm	170	170	170	170
Fork length l, mm	1150	1150	1150	1150
Outside dimension of forks b5, mm	560	560	560	560
Ground clearance, mm	20	20	20	20
Aisle width pallet Ast, mm	2195	2195	2195	2195
Turning circle radius Wa, mm	1613	1613	1613	1613
Travel speed with/without load, km/h	6/6	6/6	6/6	6/6
Lifting speed with/without load, m/s	0.13/0.25	0.13/0.25	0.13/0.25	0.13/0.25
Lowering speed with/without load, m/s	0.31/0.38	0.31/0.38	0.31/0.38	0.31/0.38
Gradient with/without load, %	5/10	5/10	5/10	5/10
Service brake	electric	electric	electric	electric
Drive motor rating, kW	1.2	1.2	1.2	1.2
Hoist motor rating, kW	3.2	3.2	3.2	3.2
Battery[2]	PzS	PzS	PzS	PzS
Battery voltage, V/Ah	24/225-300	24/225-300	24/225-300	24/225-300
Battery weight, kg	270	270	270	270
Type of control	impulse	impulse	impulse	impulse

[1] PUR … Polyurethane, VG … Solid rubber
[2] PzS … Traction battery

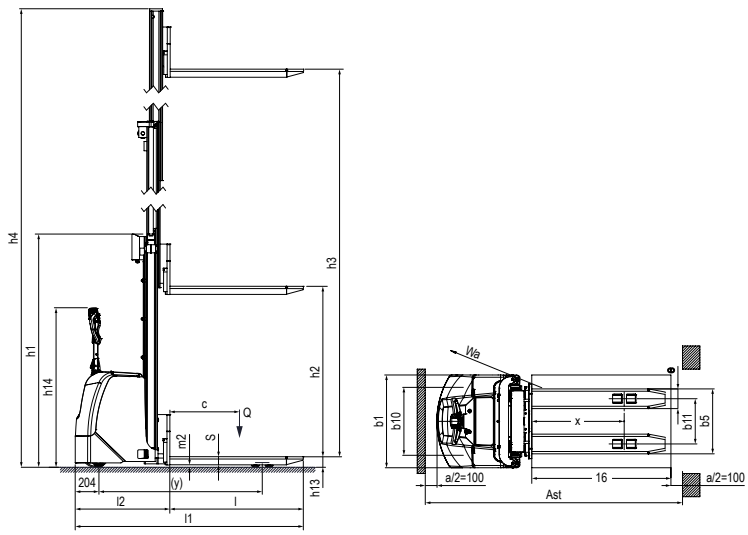

MLP 90 E
Minilifter

Capacity 90 kg,
Lifting height 1568 mm

The Minilifter is designed to be maneuverable and versatile for indoor use, where small loads are lifted frequently. It has a low unit weight and non-marking tyres that make it an indispensable tool in many areas.
The stepless adjustable handlebars provide a comfortable grip for the user.

Features

- For easy and safe maneuvering, it has 4 swivel castors, 2 of which are fitted with parking brakes.
- The forward wheel arms clear under Euro pallets.
- Electric lifting and lowering function with soft start.
- The ergonomic push handle is infinitely height-adjustable.
- Cable remote control with spiral cable.
- The connection system makes it possible to use various, optionally available load handling attachments.
- Maintenance-free, precision lead screw and nut for many years of reliable service. The safety slip clutch protects the drive in both directions.
- The lowering safety cut-out eliminates accidental crushing and entrapment when lowering the platform.
- The electronic overload protection effectively prevents accidental lifting of excessive load.
- Maintenance-free battery that can be charged at any socket.
- Robust construction with chrome plated chassis, hard chromium plated piston and pressure relief valve.
- Covered chain deflection for increased safety.

Optional

- Swiveling V-block with platform for roller material.
- Mandrel for roller material.

Scope of delivery

- Integrated battery 24 V, 7.2 Ah.
- External charger 24 V, 1.5 A.

Technical data MLP 90 E

Model	MLP 90 E
Art.-No. MLP 90 E	192104069
Art.-No. V-block for transport of rollers	192104090
Art.-No. Mandrel for handling of rollers	192104092
Art.-No. Holder for battery charger	192104093
Capacity, kg	90
Type of wheels	4 steering wheels, 2 with brake
Number of wheels front/rear	2/2
Wheel diameter front/rear, mm	60/100
Lifting range, mm	107–1568
Load center, mm	220
Weight, kg	40
Overall width, mm	519
Overall length, mm	734
Overall height, mm	1912
Ground clearance, mm	86
Platform width, mm	498
Platform length, mm	440
Actuation	electric
Material	steel/aluminium
Battery	2 x 12 V/7.2 Ah
Battery charger	100–240 V/1 A

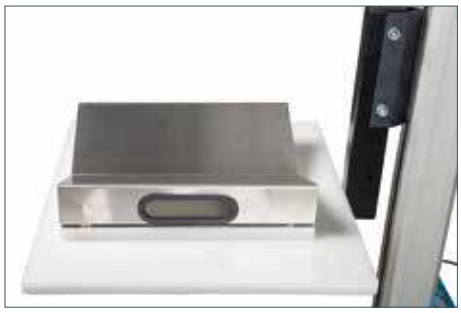

Optional: V-block

Optional: Mandrel

PRAKTIKUS HP
Platformlift, mobile

Capacity 400 kg,
Platform height max. 1200 mm

For the occasional, internal application of lifting and transporting of goods.

Features

- Easy lifting by tiltable foot pedal.
- Lowering speed can be finely metered for sensitive lowering of the load.
- Ergonomic handlebar for easy operation.
- Steering roller with brake for safe parking of the hand stacker.
- Robust construction with chrome plated chassis, hard chromium plated piston and pressure relief valve.
- Covered chain deflection for increased safety.

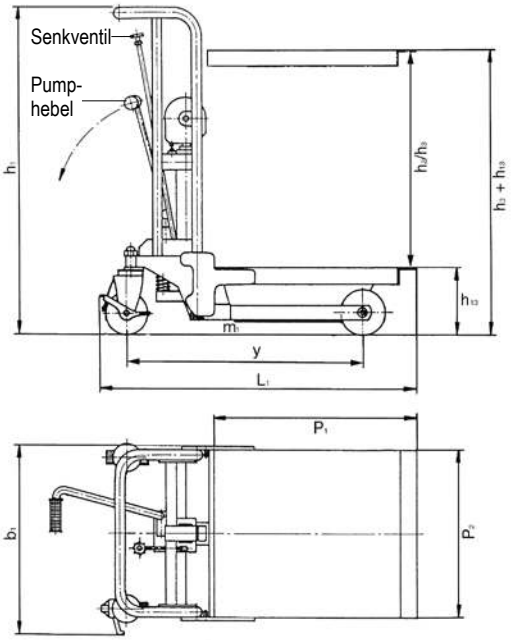

Technical data PRAKTIKUS HP

Model	HP 0412
Art.-No.	40008779
Capacity, kg	400
Platform height max. h3 + h13, mm	1200
Platform height min. h13, mm	200
Freelift h2, mm	1000
Stroke h3, mm	1000
Lifting height per pump stroke, mm	23
Overall height h1, mm	1310
Overall length L1, mm	1037
Overall width b1, mm	590
Platform length P1, mm	650
Platform width P2, mm	550
Tyre type [1]	VG/VG
Steering rollers, mm	150 x 45
Load rollers, mm	150 x 45
Number of wheels/load rollers	2/2
Ground clearance m1, mm	50
Wheelbase y, mm	785
Weight, kg	71

[1] VG … Solid rubber

HX
Scissor elevating platform, mobile with single scissor

Capacity 150 - 750 kg, Platform height max. 1000 mm

For the independant lifting and supplying of loads within a warehouse environment.

Features

- Hydraulic lifting of the load with foot pedal.
- Lowering speed can be finely metered for sensitive lowering of the load.
- Ergonomic handlebar for easy operation, tiltable for model HX 150.
- Steering roller with brake for safe parking of the hand stacker.
- Robust construction with hard chromium plated piston and pressure relief valve.

HX 150

Technical data HX

Model	HX 150	HX 300	HX 500	HX 750
Art.-No.	34600020	40057357	40057358	40057360
Capacity, kg	150	300	500	750
Platform height max. h3 + h13, mm	720	880	880	1000
Platform height min. h13, mm	220	285	285	420
Stroke h3, mm	500	595	595	580
Lifting height per pump stroke, mm	27	31	31	15
Overall height h1, mm	960	984	984	990
Overall length L1, mm	908	1093	1093	1330
Overall width b1, mm	450	500	500	600
Platform length P1, mm	700	850	850	1000
Platform width P2, mm	450	500	500	510
Tyre type[1]	PUR/PUR	PUR/PUR	PUR/PUR	PUR/PUR
Load rollers, mm	100 x 36	128 x 40	128 x 40	147 x 50
Number of wheels/load rollers	2/2	2/2	2/2	2/2
Weight, kg	49	78	82	120

[1]PUR … Polyurethane

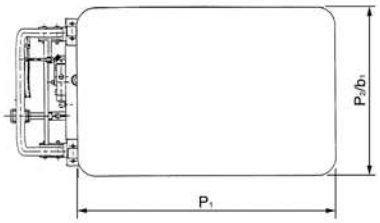

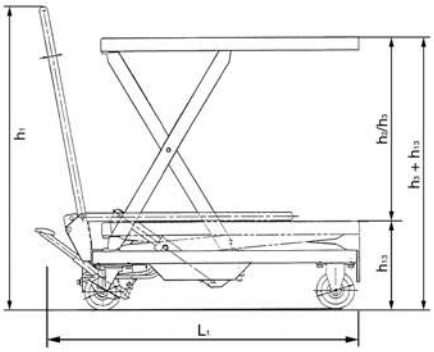

HX-D
Scissor elevating platform, mobile with double scissor

Capacity 350 kg,
Platform height max. 1300 mm

For the independant lifting and supplying of light up to medium loads within a warehouse environment.

Features

- Hydraulic lifting of the load with foot pedal.
- Lowering speed can be finely metered for sensitive lowering of the load.
- Ergonomic handlebar for easy operation.
- Steering roller with brake for safe parking of the hand stacker.
- Robust construction with hard chromium plated piston and pressure relief valve.
- According to DIN EN 1570-1, DIN EN ISO 3691-5.

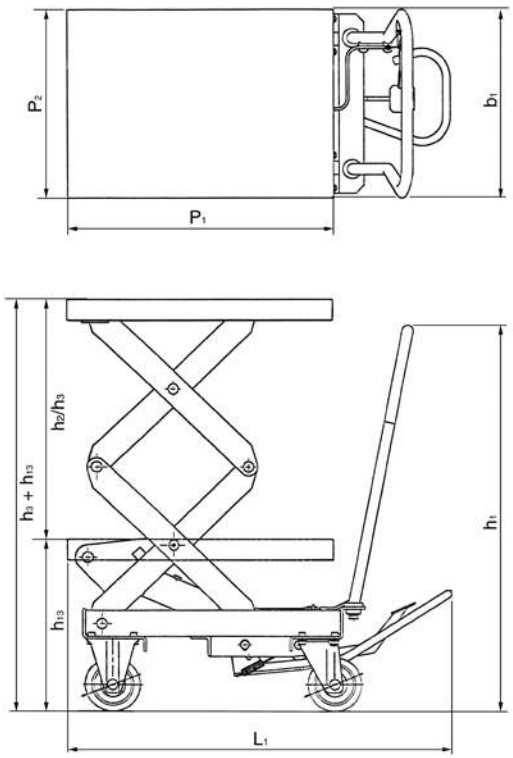

Technical data HX-D

Model	HX-D 350
Art.-No.	40057361
Capacity, kg	350
Platform height max. h3 + h13, mm	1300
Platform height min. h13, mm	370
Stroke h3, mm	930
Lifting height per pump stroke, mm	21
Overall height h1, mm	965
Overall length L1, mm	1140
Overall width b1, mm	500
Platform length P1, mm	910
Platform width P2, mm	500
Tyre type[1]	PUR/PUR
Load rollers, mm	128 x 40
Number of wheels/load rollers	2/2
Weight, kg	136

[1]PUR … Polyurethane

HF…SM
Scissor elevating platform, mobile with single scissor and - manual hydraulic

Capacity 150 - 1250 kg,
Platform height max. 1050 mm

HF…SE
- electric hydraulic system

Capacity 300 - 1250 kg,
Platform height max. 1050 mm

For lifting and supplying goods independent of the location.

Features

- Manual hydraulic system with pedal or electric hydraulic system with dead man function – a main current connection is not required.
- High safety due to pressure relief and lowering valve.
- Robust single scissor construction, above 300 kg with solid steer scissor.
- Pivoting platform with mechanic adjustment for safe maintenance work.
- Compact design with low OAH.
- Steering and fixed rollers with service-free roller bearings. One steer roller can be locked in position for parking.
- According to DIN EN 1570-1 and machinery directive 2006/42/EG.

Scope of delivery

- Models with electric-hydraulic pump are supplied complete with battery and charger.

Technical data HF/SM

Model	HF 015-078 SM	HF 030-084 SM	HF 050-090 SM	HF 080-105 SM	HF 100-105 SM	HF 125-105 SM
Art.-No.	N24501078	N24503084	N24505090	N24508105	N24510105	N24512105
Capacity, kg	150	300	500	800	1000	1250
Platform height max. h2, mm	780	840	900	1050	1050	1050
Platform height min. h1, mm	255	335	340	360	360	360
Stroke h3, mm	525	505	560	690	690	690
Overall length l1, mm	990	1050	1320	1650	2350	1650
Overall width b1, mm	450	500	610	860	1000	860
Platform length l, mm	760	840	1030	1350	2000	1350
Platform width b1, mm	450	500	610	840	1000	840
Tyre type[1]	VG	PUR	PUR	PA	PA	PA
Service brake	manual	manual	manual	manual	manual	manual
Number of strokes for max. lift	14	18	29	40	80	80
Weight (with battery and battery charger), kg	41	83	109	222	286	230

[1]PA… Polyamide, PUR… Polyurethane, VG… Solid rubber

Technical data HF/SE

Model	HF 030-084 SE	HF 050-090 SE	HF 080-105 SE	HF 100-105 SE	HF 125-105 SE
Art.-No.	N24603084	N24605090	N24608105	N24610105	N24612105
Capacity, kg	300	500	800	1000	1250
Platform height max. h2, mm	840	900	1050	1050	1050
Platform height min. h1, mm	335	340	360	360	360
Stroke h3, mm	505	560	690	690	690
Overall length l1, mm	1130	1330	1650	2350	1650
Overall width b1, mm	500	610	860	1000	860
Platform length l, mm	840	1030	1350	2000	1350
Platform width b1, mm	500	610	840	1000	840
Tyre type[1]	PUR	PUR	PA	PA	PA
Service brake	manual	manual	manual	manual	manual
Number of strokes for max. lift	electric	electric	electric	electric	electric
Weight (with battery and battery charger), kg	120	158	270	397	278

[1]PA… Polyamide, PUR… Polyurethane

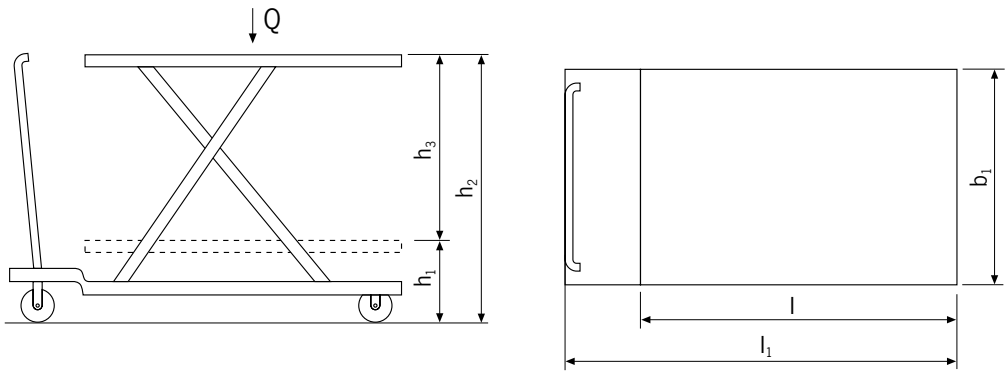

HF…DM
Scissor elevating platform, mobile with double vertical scissor and
- manual hydraulic
HF…DE
- electric hydraulic system

Capacity 125 - 800 kg,
Platform height max. 1900 mm

For lifting and supplying goods independent of the location.

Features

- Manual hydraulic system with pedal or electric hydraulic system with dead man function – a main current connection is not required.
- High safety due to pressure relief and lowering valve.
- Robust single scissor construction, above 300 kg with solid steer scissor.
- Pivoting platform with mechanic adjustment for safe maintenance work.
- Compact design with low OAH.
- Steering and fixed rollers with service-free roller bearings. One steer roller can be locked in position for parking.
- According to DIN EN 1570-1 and machinery directive 2006/42/EG.

Scope of delivery

- Models with electric-hydraulic pump are supplied complete with battery and charger.

Technical data HF/DM

Model	HF 012-142 DM	HF 045-155 DM	HF 050-190 DM	HF 080-190 DM
Art.-No.	N24701142	N24704155	N24705190	N24708190
Capacity, kg	125	450	500	800
Platform height max. h2, mm	1420	1550	1900	1900
Platform height min. h1, mm	430	295	490	490
Stroke h3, mm	990	1255	1410	1410
Overall length l1, mm	1090	1350	1650	1650
Overall width b1, mm	500	665	860	860
Platform length l, mm	840	1030	1350	1350
Platform width b1, mm	500	610	840	840
Tyre type[1]	PUR	PUR	PA	PA
Service brake	manual	manual	manual	manual
Number of strokes for max. lift	19	71	80	160
Weight (with battery and battery charger), kg	100	143	306	315

[1] PA… Polyamide, PUR… Polyurethane

Technical data HF/DE

Model	HF 012-142 DE	HF 045-155 DE	HF 050-190 DE	HF 080-190 DE
Art.-No.	N24801142	N24804155	N24805190	N24808190
Capacity, kg	125	450	500	800
Platform height max. h2, mm	1420	1550	1900	1900
Platform height min. h1, mm	430	295	490	490
Stroke h3, mm	990	1255	1410	1410
Overall length l1, mm	1090	1350	1650	1650
Overall width b1, mm	500	665	860	860
Platform length l, mm	840	1030	1350	1350
Platform width b1, mm	500	610	840	840
Tyre type[1]	PUR	PUR	PA	PA
Service brake	manual	manual	manual	manual
Number of strokes for max. lift	electric	electric	electric	electric
Weight (with battery and battery charger), kg	147	190	352	363

[1] PA… Polyamide, PUR… Polyurethane

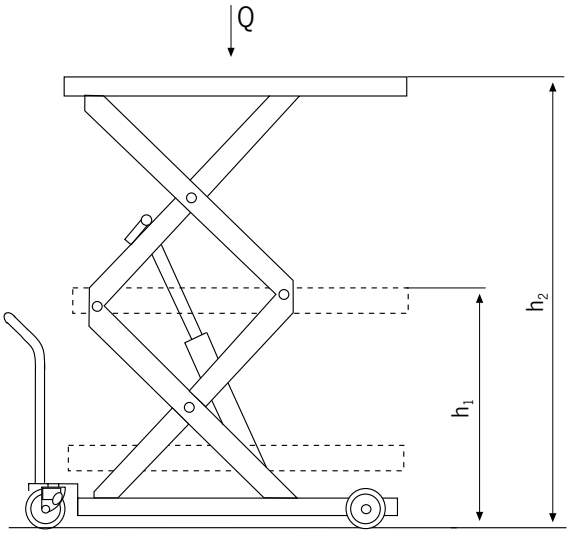

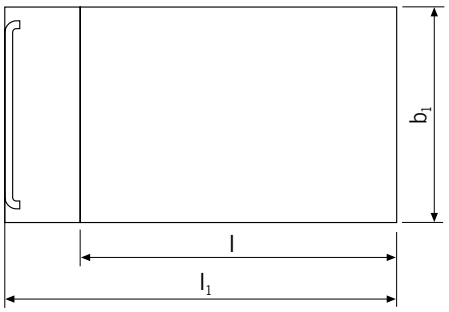

HT 08 M
Mobile elevating work bench with - manual-hydraulik lift

HT 08 E
Mobile elevating work bench with - electric-hydraulic lift

Capacity 800 kg, Platform height max. 1475 mm

For lifting and transporting of heavy loads in manufacturing and assembly processes.

Features

- TRIPLEX mast for lifting heights up to 1475 mm.
- Ergonomic handlebar for easy operation.
- Double-acting hand pump with increased lift per handle stroke (HT 08 M).
- Electric hydraulic unit with battery for comfortable and easy lifting (HT 08 E).
- Steering roller with brake for safe parking of the hand stacker.
- Robust construction with hard chromium plated piston.

Scope of delivery HT 08 E

- Battery and integrated battery charger.

HT 08 M

HT 08 E

Technical data HT 08 M and HT 08 E

Model	HT 08 M	HT 08 E
Art.-No.	N24380120	N24380129
Capacity, kg	800	800
Platform height max. h3 + h13, mm	1475	1475
Platform height min. h13, mm	700	700
Stroke h3, mm	775	775
Overall length L1, mm	980	980
Platform length P1, mm	800	800
Platform width P2, mm	750	750
Tyre type[1]	PUR/PUR	PUR/PUR
Brake	manual	manual
Lifting height per pump stroke, mm	12.5	–
Lifting speed with/without load, m/s	–	0.08/0.125
Hoist motor raiting, kW	–	0.8
Battery voltage, capacity, V/Ah	–	12/100
Battery charger, V/A	–	12/10
Weight, kg	134	152
Battery weight, kg	–	25

[1] PUR … Polyurethane

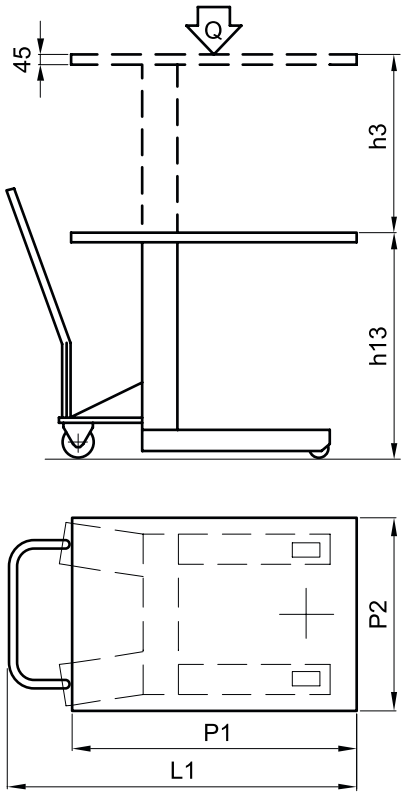

HTF-G SILVERLINE
Flat scissor lifting table

Capacity 1000 kg

For the professional lifting and handling of loads within a warehouse environment.

Features

- Extremely low-profile design reducing cost and effort for a pit-installation.
- The ramp allows loading the platform directly with a pallet truck or trolley.
- Safe operation due to push-button for up/down in dead man's control, as well as emergency stop.
- Overload protection by pressure control valve.
- Integrated pipe burst valve and mechanical rests safe maintenance and operation.
- According to DIN EN 1570-1 and all UVV safety regulations.

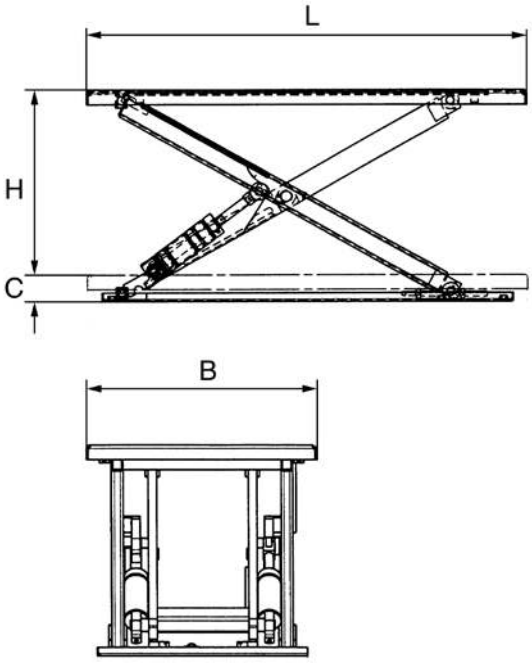

Technical data HTF-G

Model	HTF-G
Art.-No.	40047380
Capacity, kg	1000
Platform length L, m	1.45
Platform width B, m	1.14
Platform height min. C, mm	82
Lift H, m	0.76
Lifting time, sec.	18
Motor, kW	0.75
Weight, kg	250

HTF-U SILVERLINE
Flat scissor lifting table

Capacity 1000 kg

For the professional lifting and handling of loads within a warehouse environment.

Features

- Extremely low-profile design lowering the cost and effort for a pit installation.
- U-design for direct access of industrial trucks.
- Safe operation due to push-button for up/down in dead man's control, as well as emergency stop.
- Overload protection by pressure control valve.
- Integrated pipe burst valve and mechanical rests safe maintenance and operation.
- According to DIN EN 1570-1 and all UVV safety regulations.

Technical data HTF-U SILVERLINE

Model	HTF-U
Art.-No.	40047381
Capacity, kg	1000
Platform B2, mm	585
Platform length L, m	1.45
Platform width B, m	1.14
Platform height min. C, mm	80
Lift H, m	0.76
Lifting time, sec.	18
Motor, kW	0.75
Weight, kg	235

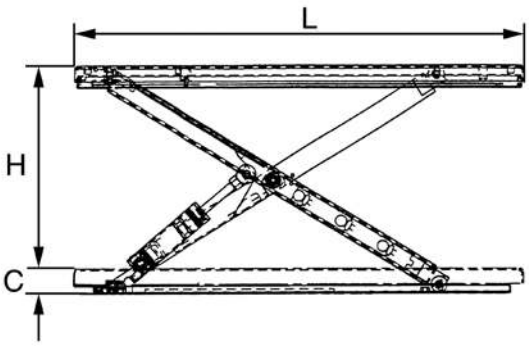

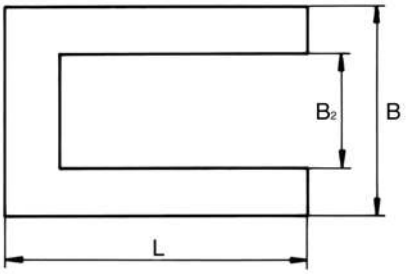

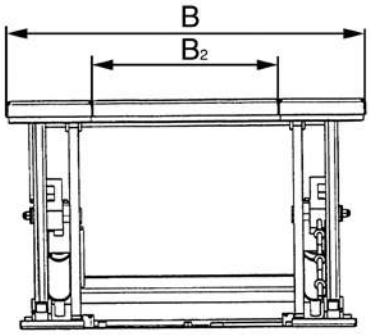

HTH-E SILVERLINE
Handling lifting table

Capacity 500 - 3000 kg

For the professional lifting and handling of heavy loads and palletised goods at workplaces.

Features

- Smooth hydraulic ram action of working height for ergonomic working conditions.
- Safe operation due to push-button for up/down in dead man's control, as well as emergency stop.
- Overload protection by pressure control valve
- Integrated pipe burst valve and mechanical rests safe maintenance and operation.
- According to DIN EN 1570-1 and all UVV safety regulations.

Technical data HTH-E SILVERLINE

Model	HTH-E	HTH-E	HTH-E	HTH-E
Art.-No.	40049470	40049471	40049472	40049473
Capacity, kg	500	1000	2000	3000
Platform length L, m	1.3	1.3	1.3	1.3
Platform width B, m	0.8	0.8	0.8	0.8
Platform height min. C, mm	190	190	190	220
Lift H, m	0.82	0.82	0.82	0.80
Lifting time, sec.	15.0	25	40	26
Motor, kW	0.75	0.75	0.75	1.50
Weight, kg	160	220	280	320

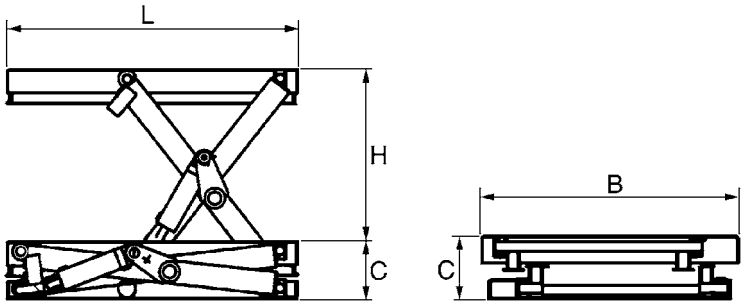

HTP SILVERLINE
Handling lifting table

Capacity 500 - 3000 kg

For the professional lifting and handling of heavy loads and palletised goods at workplaces.

Features

- Smooth hydraulic ram action of working height for ergonomic working conditions.
- Safe operation due to push-button for up/down in dead man's control, as well as emergency stop.
- Overload protection by pressure control valve
- Integrated pipe burst valve and mechanical rests safe maintenance and operation.
- According to DIN EN 1570-1 and all UVV safety regulations.

Technical data HTP

Model	HTP 5 - 800
Art.-No.	192081630
Capacity, kg	500
Platform length, mm	1250
Platform width, mm	800
Lifting height, mm	800

Model	HTP 10 - 800	HTP 10 - 800	HTP 10 - 800	HTP 10 - 800	HTP 10 - 1000	HTP 10 - 1000	HTP 10 - 1000	HTP 10 - 1000
Art.-No.	192082893	192082894	192082895	192082896	192040153	192040199	192040200	192040201
Capacity, kg	1000	1000	1000	1000	1000	1000	1000	1000
Platform length, mm	1250	1450	1250	1450	1500	1700	1500	1700
Platform width, mm	800	800	1000	1000	1000	1000	1200	1200
Lifting height, mm	800	800	800	800	1000	1000	1000	1000

Model	HTP 20 - 800	HTP 20 - 800	HTP 20 - 800	HTP 20 - 800	HTP 20 - 1250	HTP 20 - 1250	HTP 20 - 1250	HTP 20 - 1250
Art.-No.	192046864	192046865	192046866	192046867	192048080	192048081	192048082	192048083
Capacity, kg	2000	2000	2000	2000	2000	2000	2000	2000
Platform length, mm	1350	1500	1350	1500	1800	2000	1800	2000
Platform width, mm	1000	1000	1200	1200	1000	1000	1200	1200
Lifting height, mm	800	800	800	800	1250	1250	1250	1250

Motion and Lifting Technology

Customers worldwide benefit from our products, services and complete solutions from project planning to maintenance.

Our product portfolio includes screw jacks, linear actuators, lifting columns, lifting tables, electric and manual wire rope winches, screws and nuts, bevel gear boxes and accessories.

Motion technology moves and transports critical payloads and goods from a wide variety of industries with absolute reliability. The different components and solutions can be combined as required, including: screw drives, lifting columns, screw jacks and electromechanical components of linear drive technology.

Lifting technology delivers innovative solutions that lift, pull and position loads in the industrial sector and also in extreme climatic conditions. The carrying capacity range is large. These products provide efficient power transmission and safe operation.

In addition to the transport components, Columbus McKinnon Engineered Products GmbH (formerly Pfaff Verkehrstechnik) supplies the complete planning, assembly and maintenance of turnkey lifting systems for buses and trains.

- Diverse standard products
- Individual custom-made products and complete solutions
- Innovative solutions for efficient lifting, pulling and positioning of loads
- Constructive quality assurance
- Installation and commissioning
- Safety check according to UVV
- Spare parts and repair service
- Explosion-proof versions

CONTACT

Columbus McKinnon Engineered Products GmbH
Am Silberpark 2–8, 86438 Kissing, info.kissing@cmco.eu
T +49 8233 2121-0, F +49 8233 2121-805

BETA Electric Wire Rope Winches

The robust BETA EL electric wire rope winches lift, lower and pull a wide variety of loads in all areas of application.

The tried-and-tested technology of the electric wire rope winches ensures trouble-free, safe and permanent operation up to 7,500 kg. The modular principle enables high flexibility. Excellent components offer safety and a long service life.

The BETA EX electric wire rope winch models are designed for special applications. These models work reliably where there is a risk of ignition from explosive atmospheres. Since the place of use for the electric wire rope winch is very individual, the right winch can be easily put together with the flexible modular system.

The BETA EL winch with DGUV V17/18 approval lifts loads absolutely safely over people: it lifts and positions equipment and decorations precisely in trade, industry and in public rooms such as a theatre. The electric cable winch is also available in the D8 PLUS version for positioning static elements.

- Grooved cable drum with large wire rope capacity
- Variable rope entry through two rope attachments on the left and right side
- Very quiet running by diagonal interlock
- Frequency converter for stepless speed
- Electronic overload protection from 1000 kg lifting capacity
- According to the accident prevention provisions
- The modular system enables a wide range of configurations
- High quality surface coating
- Maintenance-free spur gear running in an oil bath

Lifting Tables HTPA and HTPL

In industrial and plant construction or in loading technology, the lifting tables complete existing production or assembly lines. The different loading and assembly situations often require individual lifting table solutions. This can be covered by innovative technology combined with extensive accessories.

The HTPA, a particularly stable lifting table, was designed for one-sided load distribution and increased point loads. With loads from 1000 kg to 6000 kg and a lifting height of 800 mm to 2000 mm, the lifting table HTPA counts to the absolute standard. As a PLC-controlled means of production, it can be adapted to various processes.

The loading lift table HTPL is the ideal solution when it comes to the reliable loading and unloading of heavy loads.

With loads of up to 6000 kg and lifting heights of 1100 mm to 1600 mm, it supports the logistics industry. Traversability, passenger transport and outdoor use are possible.

- Lifting table solutions for ergonomic work
- Highest quality and safety standards
- High performance and stability
- Long service life with low maintenance
- Higher lifting loads, other platform sizes on request
- Lifting tables in special versions (e.g. double scissors, tandem scissors or tilting versions)
- Extensive range of accessories
- Individual solutions, investment advice, installation and maintenance according to customer requirements

Screw Jacks

Lifting elements as a proven and reliable drive solution: Available in many standard sizes with lifting forces from 5 kN to 2000 kN and in different lifting speeds.

The SHE worm gear screw jacks are optimally used where high loads have to be positioned and lifted precisely with medium duty cycles and moderate lifting speeds. With a load capacity range from 500 kg to 200000 kg convince with a housing made of nodular cast iron.

The stainless screw jacks with swivel brackets SSP, developed for the requirements of modern paper machines, are for a variety of mechanical lifting solutions in the load range from 5000 kg to 25000 kg.

The screw jacks MERKUR are used where high loads with a moderate duty cycle and low dynamics have to be positioned, e.g. for the safe opening and closing of the maintenance hatch for wind turbines. With a load capacity range from 250 kg to 50000 kg.

- Lifting, lowering, tilting or moving
- Self-locking trapezoidal spindle
- Grease-lubricated version
- Driving speed up to 1500 min-1
- Worm gear in two gear ratios, normal and slow
- Worm shaft case-hardened and ground
- All-round processing, with the Merkur series, allows for easy alignment
- Corrosion-resistant and explosion-proof finishes available

Linear Actuators

The robust linear drives easily withstand lifting forces of up to 100 kN. They have been developed for demanding applications and offer high performance with a compact size.

The electromechanical linear drives ELA impress in rough everyday life with an encapsulated aluminum housing with worm gear and axial bearing with a push and guide tube construction. Our axial bearing system ALS is a universal drive for a wide range of applications in industry and mechanical engineering. Thanks to its own gearbox and a thrust and guide tube construction, the high-performance linear drive HLA can also cope with extreme requirements under the most adverse environmental influences.

The PHOENIX lifting column withstands lifting speeds of 5 to 250 mm/s at a maximum duty cycle of 20% /h. The powerful drive technology is specially designed to absorb extremely high compressive and tensile forces of up to 25 kN. Proven quality under extreme conditions with integrated linear guide.

- Different sizes of the linear drives with lifting forces from 5.5 kN to 100 kN
- Short safety nut possible with trapezoidal design
- Self-locking with trapezoidal thread spindles, optional ball screw
- Lifetime lubrication with high-quality grease and encapsulated design, low-maintenance
- PHOENIX models in single and multi-stage design
- Extensive range of accessories
- Explosion proof versions available

Steerman® SX and S
Heavy load moving systems

Capacity 10 - 60 t

These universal heavy load moving systems have been designed for the safe and cost saving transport of loads up to 60 tons. Individual configuration of steering and rear skates also allows higher capacities.
Transport of heavy loads (e.g. machines, construction parts, steel structures) is normally made with a stable three point loading system.

Transport of extremely bulky or heavy loads with an unfavourable center of balance, may also be executed with a four point loading system. The robust towing bar in connection with the unique turntable on large diameter thrust bearings allows effortless steering of the load.
The rear skates are aligned parallel by means of a tie rod and kept in position, thus ensuring time saving and smooth transportation of the load.

The skates are powder coated and all connecting elements corrosion-resistant. Highest safety requirements have been considered.

SX-10

Rollers with ball bearing

Chassis from ductile graphite iron

Ball bearing for turning plate

Features

- The modular design ensures an extremely simple operation and simultaneously offers a wider range of combinations.
- The construction of the load moving systems is extremely robust and resistant to distortion.
- The skates are smooth-running and provide an incredibly low rolling resistance even with the heaviest loads.
- Twin rollers (instead of one wide roller) ensure low rolling resistance even at a narrow curve radius.
- The universal joint suspension of the roller groups contributes to a positive contact when travelling over uneven floors.
- The roller wheels are manufactured with abrasion-resistant, elastic Polyamidee. They are protected against breakage and have high chemical resistance.
- Each individual roller is made from high tensile material which ensures extremely quiet running.
- The rollers are suitable for all in-plant floors and will not damage normal floor covering.
- The load moving systems can be easily dismantled and facilitate transport even in small trucks.
- The load moving systems have been developed for professional applications and are practically maintenance-free.
- All rollers are provided with two encapsulated, lifetime lubricated ball bearings.
- The front steering skate is equipped with an amply dimensioned axial ball bearing underneath the turntable.
- The front and rear skates are available individually.

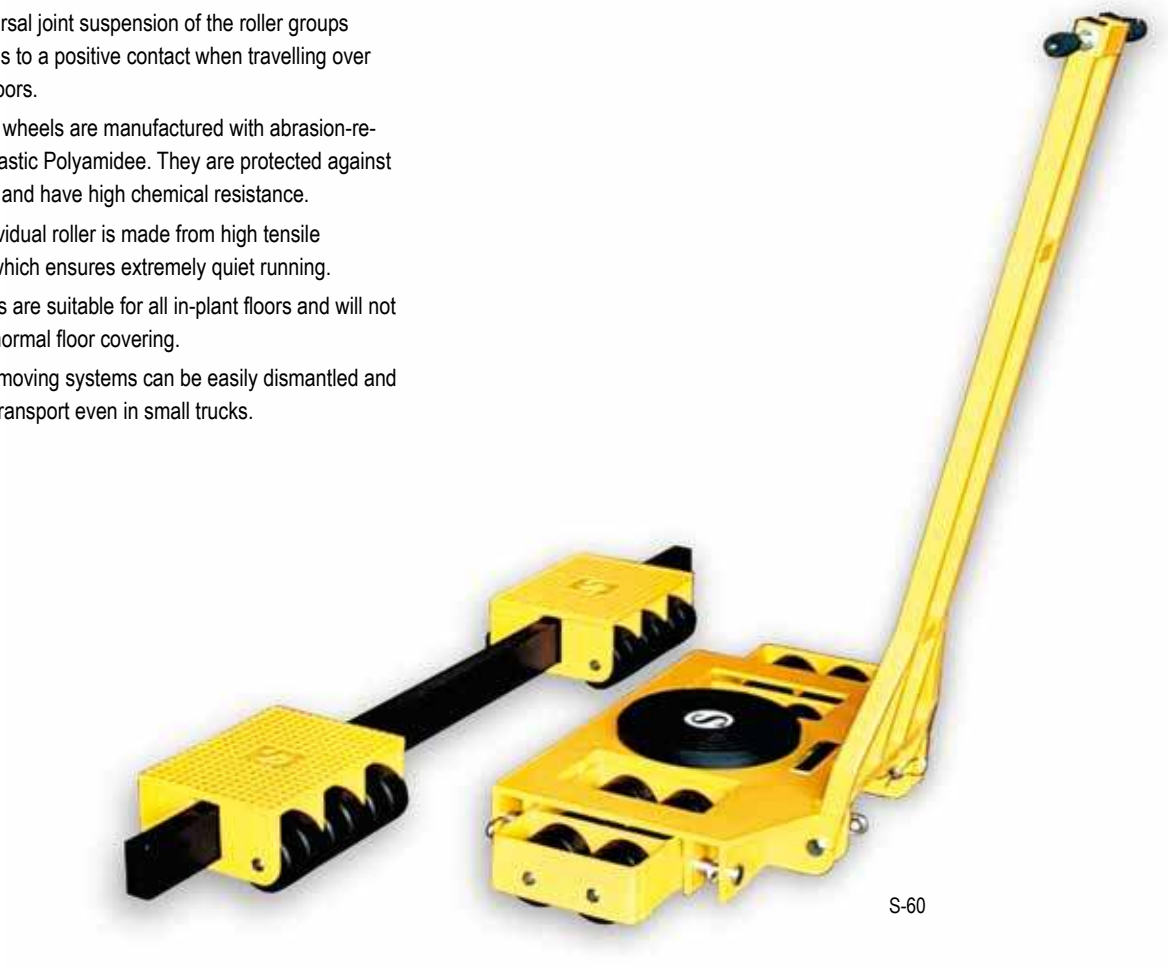

S-60

Technical data Steerman® SX and S

Model	Art.-No.	Capacity t	Overall height mm	Number of rollers	Roller diameter mm	Colour of rollers	Weight kg
SX-10	N13600977	10	102	16	82	black	54
SX-20	N13600979	20	102	32	82	black	76
SX-30	N13600981	30	110	48	82	black	136
S-60	N13601094	60	170	48	115	black	302

LF-1

LF-2

LF
Load moving skates and systems with fixed wheels

Capacity 1 - 6 t

The components of the load moving skates can be universally combined and are ideal for the transport of medium heavy loads of all kinds.
The components can be used individually or adapted to a load moving system. The units are maintenance-free.

Features

- Solid forged steel construction.
- Anti-slip rubber lining.
- Abrasion-resistant nylon wheels.
- Models LF-2,5 and above are provided with two enclosed ball bearings per wheel.

Technical data LF

Model	Art.-No.	Capacity t	Wheels	Number of rollers	Wheels diameter x width mm	Dimensions L x W x H mm	Weight kg
LF-1	N13600006	1.0	fixed	4	100 x 35	400 x 228 x 120	7.0
LF-2	N13600007	2.0	fixed	8	100 x 35	400 x 228 x 120	8.0
LF-2,5	N13600008	2.5	fixed	2	85 x 90	275 x 120 x 100	4.0
LF-3	N13600009	3.0	fixed	4	85 x 85	400 x 228 x 100	9.5
LF-6	N13600010	6.0	fixed	6	85 x 85	415 x 210 x 100	12.0

LF-2,5

LF-3

LF-6

LFL
Load moving skates and systems with steerable wheels

Capacity 1 - 2 t

The components of the load moving skates can be universally combined and are ideal for the transport of medium heavy loads of all kinds.
The components can be used individually or adapted to a load moving system. The units are maintenance-free.

Features

- Solid forged steel construction.
- Anti-slip rubber lining.
- Abrasion-resistant nylon wheels.
- Model LFL-1-2 uses two steerable and two fixed wheels.
- Model LFL-1-4 and LFL-2-4 uses four steerable wheels.

LFL-1-2

Technical data LFL

Model	Art.-No.	Capacity t	Wheels	Number of rollers	Swivel roller diameter x width mm	Fixed roller diameter x width mm	Dimensions L x W x H mm	Weight kg
LFL-1-2	N13600011	1.0	2 x fixed, 2 x steerable	4	75 x 46	100 x 35	430 x 340 x 120	13.0
LFL-1-4	N13600012	1.0	4 x steerable	4	75 x 46	–	430 x 340 x 120	14.0
LFL-2-4	192025595	2.0	4 x steerable	4	80 x 40	–	430 x 400 x 130	20.0

LFL-1-4

LX
Heavy load moving system

Capacity 6 t and 12 t

These three point loading systems comprise of a steerable front and a pair of adjustable rear skates.

The heavy load moving systems are supplied ready-to-use.

The steerable front skates (LX-6F and LX-12F) are provided with an appropriate towing bar. The rear skates (LX-12R) are identical in construction and are equipped with two adjustable tie rods.

The wheels are made of hardwearing nylon.

The front and rear skates can accept each 50 % of the total capacity.

LX-6

Technical data LX

Model	Art.-No.	Capacity t	Number of wheels front skate	Number of wheels rear skate	Wheels diameter x width mm	Load area front skate mm	Load area rear skate mm	Adjustment range rear skates mm	Height mm	Weight kg
LX-6	N13600004	6.0	4	8	85 x 90	185 x 150	300 x 250	500 - 1400	115	45.0
LX-12	N13600005	12.0	8	8	85 x 90	400 x 220	300 x 250	500 - 1400	115	80.0

LX-12

ARBURG 420 C
ALLROUNDER
JUBILEE

NETSTAL
1500
SYNERGY

Hydraulic jacks & tools

A characteristic of this “force-oriented” hydraulic programme is the operating pressure which can be as high as 700 bar. This guarantees a simple and safe generation of highest forces. In spite of this the units remain compact, portable and easy to operate. High-pressure hydraulic systems of this type are used in universal assembly and repair operations whereby their application in day-to-day operations is almost unlimited. The component programme allows the individual configuration of simple and also complex system solutions.

They are used in the following main industrial areas:

Heavy industry, mining, shipbuilding, offshore, aviation industries, power stations, steel construction, steel making and processing, building construction, bridge and tunnel construction, heavy steel and tank construction, metal processing workshops, and many more.

INFO

Please note our user instructions at the beginning of each chapter

Table of contents

	Page
Hydraulic cylinders, single-acting	358 - 367 376 - 379
Hydraulic cylinders, double-acting	368 - 375
Accessories for hydraulic cylinders	380 - 383
Hand pumps 700 bar	384 - 389
Hand pumps up to 2000 bar	390
Foot pump 700 bar	391
Electric & Pneumatic motor pumps	392 - 393
Electric hydraulic power packs	394 - 403
Valves & Accessories	404 - 417
Puller	418 - 423
Jacks	425 - 430
Hydraulic jacks & tools	431
Test rigs	432 - 433
Presses	434 - 436
Selection & Speed charts	437 - 441

Yale

HYDRAULIC JACKS & TOOLS

INFO

Why hydraulics?

Hydraulics is the kind of power transmission which allows the greatest density of forces. There is no other kind of power transmission that will transmit comparable high forces with the same construction size.

Hydraulic tools

Hydraulic tools are a special type of power tools, which can be used for general assembly and repair jobs with preferably high force in lowest spaces.
Simple applications, clearness of the programme in line with robustness, short-term deliveries and universal operation possibilities have made Yale hydraulic components indispensible tools also for elaborate functions.
The unlimited power of hydraulic tools is used in applications like lifting, levelling and positioning of heaviest loads, installations of machines, assembly of complex structures as well as in general repair of maintenance jobs.
The components can also be operated in fixtures for clamping, testing, pressing, extracting, crimping, cutting, riveting and many more.

How to reach high forces in hydraulics?

area	x	pressure	=	force
effective piston area	x	system pressure	=	force
cm²	x	bar	=	daN

Example: Hydraulic cylinder YS-10/

14.3 cm²	x	700 bar	=	10010 daN
			=	100 kN
			=	10 t

Linear conversion of pressure force

The above formula shows that pressure forces can be converted linearly.

Example:
A 10 ton cylinder presses at:

700 bar	-	100 kN	=	10 t
350 bar	-	50 kN	=	5 t
100 bar	-	14 kN	=	1.4 t
1 bar	-	0.14 kN	=	0.014 t

INFO

The system pressure determines the force of the hydraulic cylinder. The oil displacement determines the piston travel speed.

Basic terms in hydraulics

Pressure

is the system pressure generated by the pump, which, however, can also be produced by an external power source, which acts on the hydraulic cylinder.

Force

is always the pressure transferred by the hydraulic cylinder (only with counterpressure).

Stroke

is the travel distance to be achieved by the force (no-load stroke, loaded stroke, return stroke).

Piston travel speed

is the time, in which the piston of the hydraulic cylinder is to pass a certain travel distance (stroke)
(no-load stroke + loaded stroke, return stroke).

Hydraulic cylinders

are available in many different designs, however, with only two basic function principles:

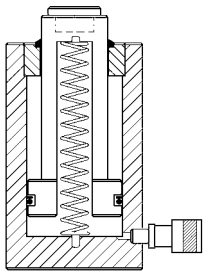

single-acting
The piston travel is achieved via hydraulic pressure and returned by spring activation (pressure build-up in one direction only).

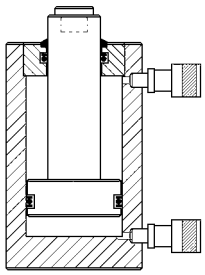

double-acting
The piston travel is achieved via hydraulic pressure in both directions.
(Push forces and pulling forces are possible).

Hydraulic hand pumps

The function of a hydraulic hand pump is to convey hydraulic oil (no-load stroke) and to generate pressure, which will be converted by the hydraulic cylinder into force (loaded stroke). Hydraulic hand pumps are independent from energy and can be used in every-day applications. They are easily portable and render an extremely high power generation in connection with a corresponding hydraulic cylinder.
Hand pumps require certain manpower and are often replaced by motor pumps in case of permanent duty and high oil quantities, respectively.

Hand pumps are distinguished by:

1. Oil displacement volume (1st stage/2nd stage).
2. The function of the hydraulic cylinder: single-acting/double-acting.

Motor pumps

transmit an oil flow as soon as the pump unit is driven by the electric motor. Contrary to hand pumps, the oil flow is also available when the hydraulic cylinder is not activated (e.g. during work breaks).

Hydraulic valves

Valves are used in hydraulics to control the oil flow (generated by either hand or motor pump) in terms of direction, pressure and oil volume.

Directional valves

are required to control the direction of the oil flow and thus the work motions of the connected hydraulic cylinder (**advance - hold - return**).
Depending on the type of pump and cylinder, 2-, 3- or 4-way valves may be employed.

3/3-way valves for single-acting cylinders

4/3-way valves for double-acting cylinders

Controls are available with either manual or electro-magnetic valves (the latter with remote cable control).

Pressure valves

are employed to limit the system pressure in a hydraulic system or within a part of the oil circuit. Pressure valves or pressure relief valves are also installed as safety devices in order to avoid excessive increase of the system pressure beyond a given value.

Shut-off and throttle valves

are used to easily shut-off hydraulic lines by hand. On account of their sensible control mode, these valves can also be applied to throttle an oil flow and thus to control the piston advance at both lifting or lowering of the load.

Safety check valves

are used for those applications where pressure drops must be avoided.

Pressure switch

can be set to any pressure value in order to switch on/off parts of the hydraulic circuit.

For your safety

Hydraulic units are extremely robust and durable. Nevertheless you should observe the following instructions for your own safety and to increase the life expectancy of the product:

- Never exceed the max. pressure (capacity) of the hydraulic units.
- Avoid eccentric loading of the piston.
- The load must always be positioned centric and parallel on the piston. Avoid point loading!
- Never pass under a raised load, if this is not supported additionally.
- Hydraulic units must be kept clear of heat (e.g. during welding).
- Protect hydraulic hoses against damage and strong kinks. Hydraulic hoses should lie freely in a wide curve. Avoid tensile load.

Eccentric loading

In order to obtain a long life expectancy, hydraulic cylinders series YS, YLS, YFS, YCS, YCH, YH and YPL are manufactured from chromium-molybdenum steel, the cylinder housings and piston rods are hardened and tempered and provided with bronze guides.
Generally, hydraulic cylinders should not be loaded eccentrically, as this can lead to reduced lifetime. In practice, a lateral loading cannot be fully avoided. In this case the maximum system pressure and the stroke of the cylinder should only be used by 50 %. Ensure that the load always rests on the total area of the steel saddle and the piston, respectively. Also ensure that the entire bottom area of the hydraulic cylinder always stands on a level, sustainable ground surface.
This applies especially to flat cylinders!

Repairs

Repair and maintenance should be performed by qualified personnel only. Make sure to use original spare parts only.

INFO

INFO

Hydraulic cylinders with Yale Chro-Mo-Design

Yale hydraulic tools are designed for professional operation. A tool is only as good as its basic material. Therefore, our cylinders are manufactured from high quality chromium-molybdenum steel and are heat-treated.

Double bronze bearings

Practice has shown that hydraulic cylinders used as a tool in workshops or on construction sites are frequently subjected to eccentric loading. Yale hydraulic cylinders are provided with double bronze bearings on the plunger, which minimizes friction between plunger and body during lateral loading.

Hard chromium-plated piston

Offers excellent protection against mechanical damage and corrosion. Excellent sliding characteristics in conjunction with the upper bronze bearing in the stop ring.

Metric mounting threads and standard parts

To facilitate the installation of hydraulic cylinders in jigs and fixtures and auxiliary structures. The metric standard throughout the entire series simplifies service operations and repairs. Cylinders carry the full load even under maximum operating pressure.

Stop ring carries full pressure

As a safety factor the stop ring on all Yale hydraulic cylinders carries the full load even under maximum operating pressure.

Delivered ready to use

Yale hydraulic cylinders are delivered ready to use incl. female coupler half, hardened saddle and mounting threads; larger cylinders come with carrying handle or transportation lugs. This also applies to customised combinations which are always supplied fully assembled.

Hardened alloy steel saddle

Metric mounting threads in cylinder base, plunger and cylinder collar (depending on series)

Two bronze bearings minimize friction even in cases of eccentric loading

INFO

Dirt wiper protects against dirt

Stop ring prevents over-stroking of the piston up to full operating pressure

Hard chromium-plated plunger

Piston and ...

... cylinder housing are made from chromium-molybdenum steel and are heat-treated

Female coupler half CFY-1 (incl. dust cap)

YS
Universal cylinder

Single-acting with spring return, capacity 5 - 100 t

Robust construction with long guides allows the units to withstand abuse and better tolerate eccentric and side loading, yet is convenient to use with only one quick-release coupler hose connection and a spring return.

Universal cylinders are designed for all jobs where high forces but compact dimensions are required: e.g. straightening steel constructions, removing parts like shafts, axles, lifting, positioning, weighing, supporting, testing as well as for all general assembly and repair applications. Due to the various mounting threads the cylinders can easily be installed in clamping devices, welding fixtures, frame presses etc.

Features

- Yale ChroMo-Design.
- Operating pressure max. 700 bar.
- Single-acting with spring return.
- Robust design with long piston bearings to withstand eccentric loading.
- Cylinder body and piston are made from solid chromium-molybdenum steel and heat-treated.
- Hard-chromium plated piston with replaceable, heat-treated saddle.
- Metric mounting threads on cylinder collar, in the base and piston rod (5 to 30 t).
- Stop ring can bear full capacity (pressure) and is fitted with dirt wiper.
- Interchangeable hardened saddle.
- Dirt wiper protects against dirt.
- Oil port thread 3/8 NPT.
- Incl. female coupler half CFY-1.
- YS-50/100 and YS-50/160 with carrying handle.
- YS-50/320 up to YS-100/200 with lifting rings.

INFO

Selection charts “cylinder/hand pumps” can be found on pages 438 - 439.

Travel-speed charts are supplied on pages 440 - 441.

Technical data YS

Cylinder size t	Model	Art.-No.	Capacity kN	Stroke mm	Effective plunger area cm²	Oil volume max. cm³	Closed height mm	Cylinder outside diameter mm	Weight kg
5	**YS-5/15**	N11100001	50	15	7.2	11	45	41	0.9
5	**YS-5/25**	N11100002	50	25	7.2	18	97	42	1.0
5	**YS-5/75**	N11100003	50	75	7.2	53	157	42	1.5
5	**YS-5/127**	N11100004	50	127	7.2	90	214	42	2.0
5	**YS-5/180**	N11100005	50	180	7.2	127	267	42	2.4
10	**YS-10/25**	N11100006	100	25	14.3	37	90	57	1.6
10	**YS-10/50**	N11100007	100	50	14.3	73	125	57	2.1
10	**YS-10/100**	N11100008	100	100	14.3	146	178	57	2.8
10	**YS-10/150**	N11100009	100	150	14.3	218	250	57	4.1
10	**YS-10/200**	N11100010	100	200	14.3	291	300	57	4.7
10	**YS-10/250**	N11100011	100	250	14.3	363	352	57	5.5
10	**YS-10/300**	N11100012	100	300	14.3	436	407	57	6.3
15	**YS-15/25**	N11100013	150	25	21.5	53	110	67	2.7
15	**YS-15/50**	N11100014	150	50	21.5	106	140	67	3.3
15	**YS-15/100**	N11100015	150	100	21.5	213	190	67	4.3
15	**YS-15/150**	N11100016	150	150	21.5	319	260	67	5.8
15	**YS-15/200**	N11100017	150	200	21.5	425	310	67	7.0
15	**YS-15/250**	N11100018	150	250	21.5	531	365	67	8.0
15	**YS-15/300**	N11100019	150	300	21.5	637	420	67	9.0
15	**YS-15/350**	N11100020	150	350	21.5	744	472	67	10.0
23	**YS-23/25**	N11100021	230	25	32.9	83	116	85	5.0
23	**YS-23/50**	N11100022	230	50	32.9	166	150	85	6.0
23	**YS-23/100**	N11100023	230	100	32.9	332	202	85	7.5
23	**YS-23/160**	N11100024	230	160	32.9	531	277	85	10.0
23	**YS-23/210**	N11100025	230	210	32.9	697	330	85	12.0
23	**YS-23/250**	N11100026	230	250	32.9	830	376	85	13.5
23	**YS-23/300**	N11100027	230	300	32.9	996	428	85	15.0
23	**YS-23/345**	N11100028	230	345	32.9	1145	477	85	16.5
30	**YS-30/125**	N11100029	300	125	42.9	552	245	102	13.0
30	**YS-30/200**	N11100030	300	200	42.9	884	325	102	17.0
50	**YS-50/50**	N11100031	500	50	71.5	355	170	125	15.0
50	**YS-50/100**	N11100032	500	100	71.5	709	220	125	19.0
50	**YS-50/160**	N11100033	500	160	71.5	1135	285	125	24.0
50	**YS-50/320**	N11100034	500	320	71.5	2269	460	125	37.0
70	**YS-70/150**	N11100035	700	150	100.0	1478	285	146	32.0
70	**YS-70/330**	N11100036	700	330	100.0	3252	490	146	52.0
100	**YS-100/100**	N11100476	1000	100	143.0	1432	275	180	43.0
100	**YS-100/200**	N11100037	1000	200	143.0	2863	375	180	64.0

Accessories for YS cylinders like lifting claws, piston plates, base adaptors, extension tubes, support plates and threaded flanges are also available

Support plates are available as accessories

Threaded flanges are available as accessories

INFO

For accessories for cylinders series YS please see pages 380 - 382.

Dimensions YS

Model	YS-5/15	YS-5/25	YS-5/75	YS-5/127	YS-5/180	YS-10/25	YS-10/50	YS-10/100	YS-10/150	YS-10/200
A, mm	45	97	157	214	267	90	125	178	250	300
B, mm	60	122	232	341	447	115	175	278	400	500
C, mm	45	92	152	209	262	88	119	172	244	294
D, mm	41	42	42	42	42	57	57	57	57	57
E, mm	30	30	30	30	30	43	43	43	43	43
F, mm	25	26	26	26	26	38	38	38	38	38
H, mm	19	19	19	19	19	17	19	19	21	21
J, mm	–	25	25	25	25	–	35	35	35	35
K, mm	–	5	5	5	5	3	6	6	6	6
O, mm	–	M20 x 2	M20 x 2	M20 x 2	M20 x 2	–	M27 x 2	M27 x 2	M27 x 2	M27 x 2
P, mm	–	13	13	13	13	–	17	17	22	22
S, mm	–	–	–	–	–	–	–	–	–	–
U, mm	28.5	28	28	28	28	35	35	35	35	35
V, mm	2 x 5.5 Ø	2 x M6	2 x M6	2 x M6	2 x M6	2 x M8	2 x M8	2 x M8	2 x M8	2 x M8
W, mm	–	23	23	23	23	27	27	27	27	27
X, mm	–	M42 x 1.5	M42 x 1.5	M42 x 1.5	M42 x 1.5	M57 x 1.5	M57 x 1.5	M57 x 1.5	M57 x 1.5	M57 x 1.5
Z, °	5	5	5	5	5	5	5	5	–	–

Model	YS-10/250	YS-10/300	YS-15/25	YS-15/50	YS-15/100	YS-15/150	YS-15/200	YS-15/250	YS-15/300	YS-15/350
A, mm	352	407	110	140	190	260	310	365	420	472
B, mm	602	707	135	190	290	410	510	615	720	822
C, mm	346	401	103	133	183	253	303	358	413	465
D, mm	57	57	67	67	67	67	67	67	67	67
E, mm	43	43	52	52	52	52	52	52	52	52
F, mm	38	38	46	46	46	46	46	46	46	46
H, mm	21	21	19	19	19	22	22	22	22	22
J, mm	35	35	40	40	40	40	40	40	40	40
K, mm	6	6	7	7	7	7	7	7	7	7
O, mm	M27 x 2	M27 x 2	M33 x 2	M33 x 2	M33 x 2	M33 x 2	M33 x 2	M33 x 2	M33 x 2	M33 x 2
P, mm	22	22	19	19	19	25	25	25	25	25
S, mm	–	–	–	–	–	–	–	–	–	–
U, mm	35	35	42	42	42	42	42	42	42	42
V, mm	2 x M8	2 x M8	2 x M10	2 x M10	2 x M10	2 x M10	2 x M10	2 x M10	2 x M10	2 x M10
W, mm	27	27	33	33	33	33	33	33	33	33
X, mm	M57 x 1.5	M57 x 1.5	M67 x 1.5	M67 x 1.5	M67 x 1.5	M67 x 1.5	M67 x 1.5	M67 x 1.5	M67 x 1.5	M67 x 1.5
Z, °	–	–	5	5	5	–	–	–	–	–

Model	YS-23/25	YS-23/50	YS-23/100	YS-23/160	YS-23/210	YS-23/250	YS-23/300	YS-23/345	YS-30/125	YS-30/200
A, mm	116	150	202	277	330	376	428	477	245	325
B, mm	141	200	302	437	540	626	728	822	370	525
C, mm	113	142	194	269	322	368	420	469	235	315
D, mm	85	85	85	85	85	85	85	85	102	102
E, mm	65	65	65	65	65	65	65	65	75	75
F, mm	56	56	56	56	56	56	56	56	65	65
H, mm	20	22	22	22	22	22	22	22	25	25
J, mm	50	50	50	50	50	50	50	50	50	50
K, mm	3	8	8	8	8	8	8	8	10	10
O, mm	M40 x 2	M40 x 2	M40 x 2	M40 x 2	M40 x 2	M40 x 2	M40 x 2	M40 x 2	M36 x 2	M36 x 2
P, mm	15	22	22	25	25	25	25	25	25	25
S, mm	–	–	–	–	–	–	–	–	–	–
U, mm	55	55	55	55	55	55	55	55	75	75
V, mm	4 x M10	4 x M10	4 x M10	4 x M10	4 x M10	4 x M10	4 x M10	4 x M10	4 x M10	4 x M10
W, mm	40	40	40	40	40	40	40	40	45	45
X, mm	M85 x 2	M85 x 2	M85 x 2	M85 x 2	M85 x 2	M85 x 2	M85 x 2	M85 x 2	M102 x 2	M102 x 2
Z, °	5	–	–	–	–	–	–	–	–	–

Dimensions YS

Model	YS-50/50	YS-50/100	YS-50/160	YS-50/320	YS-70/150	YS-70/330	YS-100/100	YS-100/200
A, mm	170	220	285	460	285	490	275	375
B, mm	220	320	445	780	435	820	375	575
C, mm	165	215	280	455	280	485	270	370
D, mm	125	125	125	125	146	146	180	180
E, mm	95	95	95	95	112	112	135	135
F, mm	85	85	85	85	95	95	115	115
H, mm	29	29	29	29	30	30	60	60
J, mm	70	70	70	70	80	80	100	100
K, mm	5	5	5	5	5	5	5	5
O, mm	4 x M8	4 x M8	4 x M8	4 x M8	4 x M8	4 x M8	4 x M10	4 x M10
P, mm	–	–	–	–	–	–	–	–
S, mm	–	51	51	24	24	24	24	24
U, mm	95	95	95	95	110	110	145	145
V, mm	4 x M12	4 x M12	4 x M12	4 x M12	4 x M12	4 x M12	4 x M12	4 x M12
W, mm	50	50	50	50	60	60	70	70
X, mm	M125 x 2	M125 x 2	M125 x 2	M125 x 2	M146 x 3	M146 x 3	M180 x 3	M180 x 3
Z, °	–	–	–	–	–	–	–	–

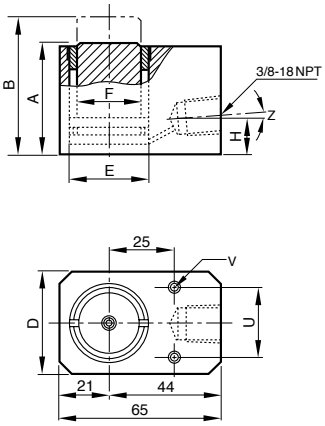

YS-5/15

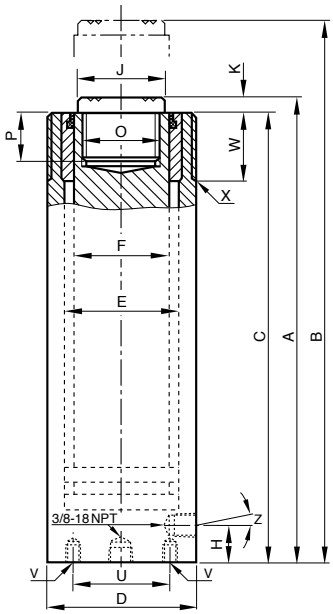

YS-5/25 up to YS-30/200

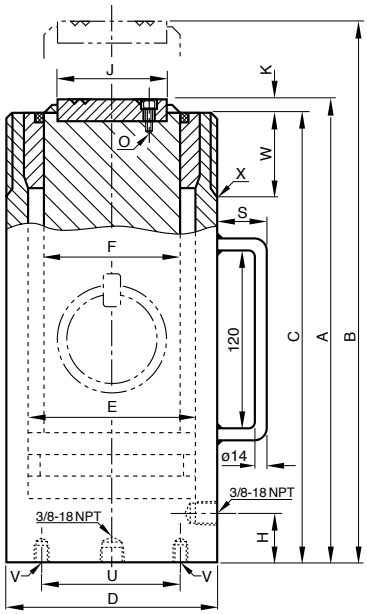

YS-50/50 up to YS-100/200

INFO

Subject to changes.

YLS

YFS

YLS and YFS
Low-height and flat cylinders

Single-acting with spring return, capacity max. 10 - 100 t

Low-height cylinders are recommended for all lifting, pushing, levelling, pressing applications especially in tight working areas.

These very compact hydraulic cylinders are designed for lifting and positioning jobs as well as all general maintenance applications, where low height, portability and light weight are needed. These versatile cylinders are found in all industrial areas like steel mills, civil engineering, heavy construction industry, power plants, off-shore industries etc. Due to their short strokes flat cylinders should not be subjected to side loading.

Features

- Yale ChroMo-Design.
- Operating pressure max. 700 bar.
- Single-acting with spring return.
- Low height for tight working areas.
- Cylinder body and piston are made from solid chromium-molybdenum steel and heat-treated.
- Stop ring can bear full capacity (pressure) and is fitted with dirt wiper Dirt wiper protects against dirt.
- Oil port thread 3/8 NPT.
- Incl. female coupler half CFY-1.
- YLS-100/55 with lifting rings, YFS-100/15 with carrying handle.

INFO

Selection charts “cylinder/hand pumps” can be found on pages 438 - 439.

Travel-speed charts are supplied on pages 440 - 441.

Technical data YLS

Cylinder size t	**Model**	Art.-No.	Capacity max. kN	Stroke mm	Effective plunger area cm²	Oil volume max. cm³	Closed height mm	Cylinder outside diameter mm	Weight kg
10	**YLS-10/35**	N11300634	100	35	14.3	51	86	70	2.5
20	**YLS-20/45**	N11300635	200	45	28.6	128	100	85	4.0
30	**YLS-30/60**	N11300636	300	60	42.9	266	120	100	6.5
50	**YLS-50/60**	N11300637	500	60	71.5	426	122	125	10.4
100	**YLS-100/55**	N11300638	1000	55	143.0	788	141	170	24.0

Technical data YFS

Cylinder size t	**Model**	Art.-No.	Capacity max. kN	Stroke mm	Effective plunger area cm²	Oil volume max. cm³	Closed height mm	Cylinder outside diameter mm	Weight kg
10	**YFS-10/11**	N11300629	100	11	14.3	16	43	56	1.5
20	**YFS-20/15**	N11300630	200	15	28.6	31	60	76	3.0
30	**YFS-30/15**	N11300631	300	15	44.2	66	60	96	4.2
50	**YFS-50/15**	N11300632	500	15	71.5	107	70	145	8.7
100	**YFS-100/15**	N11300633	1000	15	143.0	215	91	170	16.0

Dimensions YLS and YFS

Model	**YLS-10/35**	**YLS-20/45**	**YLS-30/60**	**YLS-50/60**	**YLS-100/55**	**YFS-10/11**	**YFS-20/15**	**YFS-30/15**	**YFS-50/15**	**YFS-100/15**
A, mm	86	100	120	122	141	43	60	60	70	91
B, mm	121	145	180	182	196	54	75	75	85	106
D, mm	70	85	100	125	170	56	76	96	145	170
D1, mm	–	–	–	–	–	83	95	115	–	–
E, mm	43	60	75	95	135	43	60	75	95	135
F, mm	38	50	57	75	120	38	50	57	75	120
H, mm	16	17	19	19	26	16	19	19	19	22
M, mm	–	–	–	–	148	–	–	–	–	85
Q, mm	–	–	–	–	–	28	38	48	–	–
R, mm	54	54	54	54	54	54	54	54	54	54
S, mm	–	–	–	–	25	–	–	–	–	55
Z, °	10	10	5	5	–	10	5	5	5	5

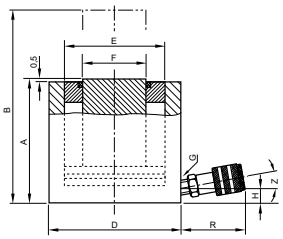

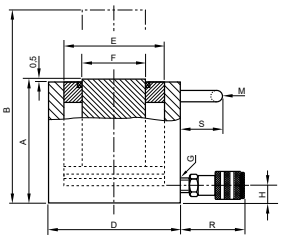

YLS

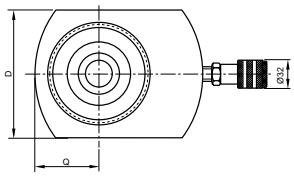

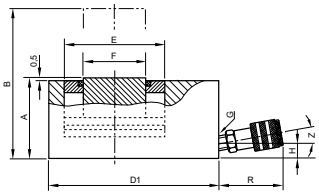

YFS

YPL
Pull cylinder

Single-acting with spring return, capacity max. 10 - 51 t

Pull cylinders are able to produce extremely high pulling forces and can be controlled precisely by the use of hand pumps or power packs. In neutral position pull cylinders are fully extended. As soon as the cylinders are pressurized the forged links are drawn together. A built-in return spring extends the piston again as soon as the pressure is released.

Shipbuilding, heavy-vessel construction, steel construction, civil engineering as well as general repair and maintenance applications.

Features

- Yale ChroMo-Design.
- Operating pressure max. 700 bar.
- Single-acting with spring return.
- Can be operated in all positions (except model YPPS).
- Cylinder body and piston are made from solid chromium-molybdenum steel and heat-treated.
- Hard-chromium plated piston with replaceable, heat-treated saddle.
- Stop ring can bear full capacity (pressure) and is fitted with dirt wiper Dirt wiper protects against dirt.
- Forged, replaceable links.
- With carrying handle and piston protection cover.
- Oil port thread 3/8 NPT.
- Incl. female coupler half CFY-1.
- The pull cylinder YPPS-10/150 is equipped with an integrated hand pump similar to HPS-2/0,7 A.

INFO

Selection charts “cylinder/hand pumps” can be found on pages 438 - 439.

Travel-speed charts are supplied on pages 440 - 441.

Technical data YPL

Cylinder size t	Model	Art.-No.	Capacity max. kN	Stroke mm	Effective plunger area cm²	Oil volume max. cm³	Length between links mm	Weight kg
10	**YPL-10/150**	N11900349	100	150	14.2	213	750	9
20	**YPL-20/150**	N11900350	200	150	30.6	459	795	22
30	**YPL-30/150**	N11900351	300	150	42.6	639	875	29
51	**YPL-51/150**	N11900927	510	150	74.6	1120	955	59
10	**YPPS-10/150**	N11900001	100	150	14.2	213	750	19

Dimensions YPL

Model	YPL-10/150	YPL-20/150	YPL-30/150	YPL-51/150	YPPS-10/150
A, mm	749	795	875	955	749
B, mm	78	95	120	150	78
C, mm	32	35	56	70	32
D, mm	68	105	121	156	68
E, mm	120	120	150	150	120
G, mm	23	30	32	40	23
H, mm	M24 x 1.5	M45 x 2	M50 x 2	M60 x 2	M24 x 1.5

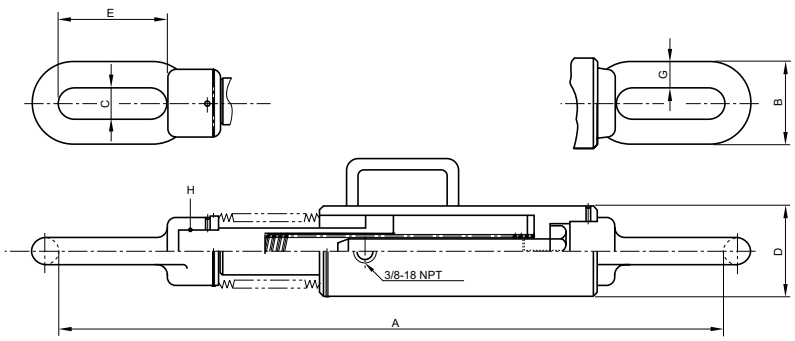

YCS
Hollow cylinders

Single-acting with spring return, capacity 12 - 93 t

Due to the centre hole design a threaded rod can be placed through the hollow cylinders so that extremely high pulling forces can be achieved.

Hollow cylinders are used as the power component within hydraulic puller sets, for prestressing anker bolts, removing axles, shafts, bushings, extracting tubes, as well as for heavy-duty pulling applications.

Features

- Yale ChroMo-Design.
- Operating pressure max. 700 bar.
- Single-acting with spring return.
- With large centre hole diameter.
- Cylinder body and piston are made from solid chromium-molybdenum steel and heat-treated.
- Hard-chromium plated piston with replaceable, heat-treated saddle.
- Metric mounting threads at cylinder body and inside of piston.
- Stop ring prevents overtravel of the piston up to full operating pressure.
- Interchangeable hardened saddle.
- With inner and outer dirt wipers.
- Oil port thread 3/8 NPT.
- Incl. female coupler half CFY-1.
- From YCS-21/150 with carrying handle.
- From YCS-57/70 with two lifting rings.

INFO

Selection charts “cylinder/hand pumps” can be found on pages 438 - 439.

Travel-speed charts are supplied on pages 440 - 441.

Function principal of the hollow cylinders

In connection with threaded rods hollow cylinders can produce extremely high forces which are helpful for various repair or assembly applications like removing press-fitted parts, prestressing anchors etc.
In addition, hollow cylinders are used as power source in puller sets and test rigs. By the use of long threaded rods and by readjusting the nut larger distances can be pulled even when using short cylinder strokes.

Technical data YCS

Cylinder size t	**Model**	Art.-No.	Capacity kN	Stroke mm	Effective plunger area cm²	Oil volume max. cm³	Closed height mm	Centre hole diameter mm	Cylinder outside diameter mm	Weight kg
12	**YCS-12/40**	N11400070	120	40	17.2	71	142	20	70	3.5
12	**YCS-12/75**	N11400071	120	75	17.2	132	195	20	70	4.5
21	**YCS-21/50**	N11400072	214	50	30.5	153	173	27	100	8.5
21	**YCS-21/150**	N11400073	214	150	30.5	458	335	27	100	15.0
33	**YCS-33/60**	N11400074	335	60	47.9	287	193	33	114	12.0
33	**YCS-33/150**	N11400075	335	150	47.9	716	343	33	114	21.0
57	**YCS-57/70**	N11400076	567	70	81.0	562	242	42	150	25.0
62	**YCS-62/150**	N11400077	618	150	88.3	1330	335	55	163	38.0
93	**YCS-93/75**	N11400078	930	75	133	990	280	80	214	55.0

Dimensions YCS

Model	**YCS-12/40**	**YCS-12/75**	**YCS-21/50**	**YCS-21/150**	**YCS-33/60**	**YCS-33/150**	**YCS-57/70**	**YCS-62/150**	**YCS-93/75**
A, mm	135	188	163	325	183	333	230	323	265
B, mm	175	263	213	475	243	483	300	473	340
C, mm	20	20	27	27	33	33	42	55	80
D, mm	70	70	100	100	114	114	150	163	214
E, mm	55	55	73	73	90	90	118	130	170
F, mm	40	40	53	53	65	65	90	100	136
J, mm	38	38	50	50	62	62	85	96	132
K, mm	3	3	3	3	3	3	3	3	5
M, mm	–	–	–	120	–	120	–	–	–
O, mm	M30 x 1.5	M30 x 1.5	M40 x 1.5	M40 x 1.5	M48 x 1.5	M48 x 1.5	M65 x 2	M78 x 2	M115 x 2
P, mm	20	20	25	25	30	30	35	40	45
R, mm	4	4	5	5	5	5	5	5	–
S, mm	–	–	–	51	–	51	24	24	24
T, mm	–	–	–	–	–	–	155	200	170
U, mm	58	58	82	82	92	92	120	135	180
V, mm	2 x M8	2 x M8	2 x M10	2 x M10	4 x M10	4 x M10	4 x M12	4 x M12	4 x M16
W, mm	30	30	35	35	40	40	50	60	–
X, mm	M70 x 2	M70 x 2	M100 x 2	M100 x 2	M110 x 2	M110 x 2	M150 x 3	M160 x 3	–
Y, mm	7	7	10	10	10	10	12	12	15

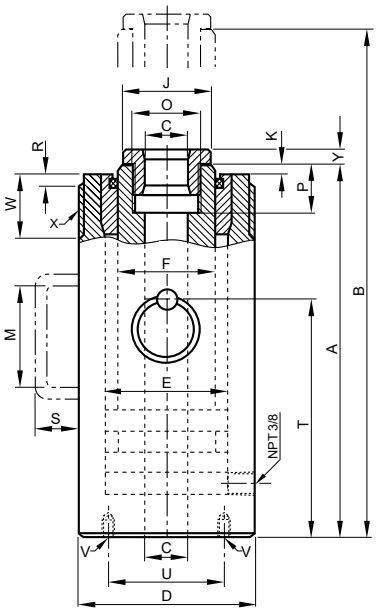

YCH
Hollow cylinders

Double-acting with hydraulic return, capacity 33 - 140 t

Basically, the applications are the same as for the single-acting hollow cylinders shown on the opposite page, but for this model range the return of the piston is done hydraulically by means of the second oil port. These double-acting hollow cylinders are used when the piston needs to be retracted quickly e.g. with high-cycle pulling applications.

Features

- Yale ChroMo-Design.
- Operating pressure max. 700 bar.
- Double-acting with hydraulic return.
- With large centre hole diameter.
- Cylinder body and piston are made from solid chromium-molybdenum steel and heat-treated.
- Hard-chromium plated piston with replaceable, heat-treated saddle.
- Metric mounting threads at cylinder body and inside of piston.
- Stop ring prevents overtravel of the piston up to full operating pressure.
- Interchangeable hardened saddle.
- With inner and outer dirt wipers.
- Oil port thread 3/8 NPT.
- Incl. 2 female coupler halves CFY-1.
- All cylinders with carrying handle, from model YCH-62/250 with 2 lifting rings.

INFO

On request we supply special hollow cylinders with pulling capacities up to 600 tons.

Selection charts “cylinder/hand pumps” can be found on pages 438 - 439.

Travel-speed charts are supplied on pages 440 - 441.

Technical data YCH

Cylinder size t	Model	Art.-No.	Capacity push kN	Capacity pull kN	Stroke mm	Effective plunger area cm²	Oil volume max. cm³	Closed height mm	Centre hole diameter mm	Cylinder outside diameter mm	Weight kg
33	**YCH-33/150**	N11400079	335	180	150	47.9	716	310	33	114	19
33	**YCH-33/250**	N11400080	335	180	250	47.9	1200	415	33	114	25
62	**YCH-62/250**	N11400081	618	300	250	88.3	2220	452	55	163	55
93	**YCH-93/250**	N11400082	930	450	250	133.0	3320	465	55	193	82
100	**YCH-100/40**	N11400083	1000	500	40	143.0	578	190	55	200	38
140	**YCH-140/200**	N11400084	1400	700	200	200.2	4080	383	80	253	115

For double-acting hollow cylinders the “capacity push” is equivalent to the max. pulling force achieved with tensioning anchor or threaded spindle.

Dimensions YCH

Model	YCH-33/150	YCH-33/250	YCH-62/250	YCH-93/250	YCH-100/40	YCH-140/200
A, mm	300	405	440	450	175	365
B, mm	450	655	690	700	215	565
C, mm	33	33	55	55	55	80
D, mm	114	114	163	193	200	253
E, mm	90	90	130	150	155	195
F, mm	67	67	105	120	125	160
J, mm	62	62	96	110	110	145
K, mm	3	3	5	5	5	5
M, mm	120	120	–	–	–	–
O, mm	M48 x 1,5	M48 x 1,5	M78 x 2	M85 x 2	M85 x 2	M115 x 2
P, mm	30	30	40	45	45	50
R, mm	5	5	5	5	–	–
S, mm	51	51	24	30	24	30
T, mm	–	–	290	290	115	240
U, mm	92	92	135	160	165	210
V, mm	4 x M10	4 x M10	4 x M12	4 x M16	4 x M16	4 x M16
W, mm	40	40	50	65	–	–
X, mm	M110 x 2	M110 x 2	M160 x 3	M190 x 3	–	–
Y, mm	10	10	12	15	15	18

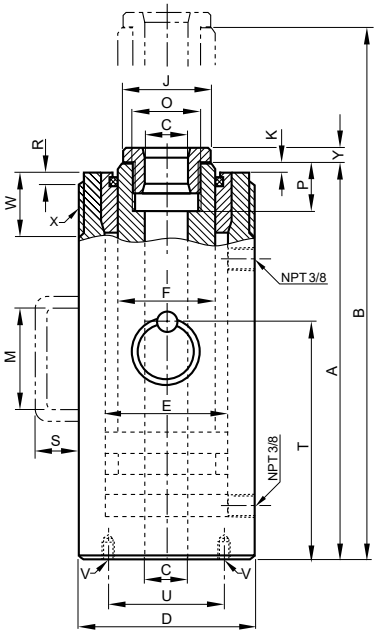

YH
Universal cylinders

Double-acting with hydraulic return, capacity 5 - 200 t

These extremely robust double-acting cylinders are especially designed for universal heavy-duty lifting and positioning applications as well as for industrial production and assembly jobs. The cylinders offer high pushing and pulling forces. The double-acting design assures a high piston retraction speed.

Major areas of application are bridge building and civil engineering, off-shore, ship building, etc. They can also be used as power source in frame presses, stamping fixtures and other industrial uses where high pushing and pulling forces are required.

Features

- Yale ChroMo-Design.
- Operating pressure max. 700 bar.
- Double-acting with hydraulic return.
- Long bronze piston guidings.
- Piston strokes from 30 up to 500 mm.
- Cylinder body and piston are made from solid chromium-molybdenum steel and heat-treated.
- Hard-chromium plated piston with replaceable, heat-treated saddle.
- Metric mounting threads on cylinder housing, in the bottom of the cylinder body and in the piston rod.
- Stop ring can bear full capacity (pressure) and is fitted with dirt wiper.
- Interchangeable hardened saddle.
- Dirt wiper protects against dirt.
- Oil port thread 3/8 NPT.
- Incl. 2 female coupler halves CFY-1.
- From YH-30/200 with carrying handle.
- From YH-50/350 with 2 lifting rings.

INFO

For cylinders series YH accessories please see pages 382 - 383.

Selection charts “cylinder/hand pumps” can be found on pages 438 - 439.

Travel-speed charts are supplied on pages 440 - 441.

Technical data YH

Cylinder size t	Model	Art.-No.	Capacity push kN	Capacity pull kN	Stroke mm	Effective plunger area push cm²	Effective plunger area pull cm²	Oil volume max. cm³	Closed height mm	Cylinder outside diameter mm	Weight kg
5	**YH-5/30**	N11200038	50	22	30	7.2	3.1	21	160	55	2.5
5	**YH-5/80**	N11200039	50	22	80	7.2	3.1	57	210	55	3.3
5	**YH-5/150**	N11200040	50	22	150	7.2	3.1	106	280	55	4.4
10	**YH-10/30**	N11200041	100	45	30	14.3	6.4	44	175	67	4.0
10	**YH-10/80**	N11200042	100	45	80	14.3	6.4	116	225	67	5.0
10	**YH-10/150**	N11200043	100	45	150	14.3	6.4	218	295	67	6.7
10	**YH-10/250**	N11200044	100	45	250	14.3	6.4	363	395	67	9.0
20	**YH-20/50**	N11200045	200	100	50	28.6	14.3	142	195	85	7.0
20	**YH-20/150**	N11200046	200	100	150	28.6	14.3	424	310	85	11.0
20	**YH-20/250**	N11200047	200	100	250	28.6	14.3	707	410	85	14.0
30	**YH-30/200**	N11200048	300	140	200	42.9	20.0	884	355	102	19.0
30	**YH-30/350**	N11200049	300	140	350	42.9	20.0	1547	510	102	27.0
50	**YH-50/150**	N11200050	500	220	150	71.5	31.5	1064	325	125	27.0
50	**YH-50/350**	N11200051	500	220	350	71.5	31.5	2481	525	125	42.0
50	**YH-50/500**	N11200052	500	220	500	71.5	31.5	3544	685	125	52.0
70	**YH-70/150**	N11200053	700	330	150	100.0	47.2	1478	335	146	37.0
70	**YH-70/350**	N11200054	700	330	350	100.0	47.2	3449	540	146	56.0
100	**YH-100/50**	N11200055	1000	450	50	143.0	64.4	716	265	180	49.0
100	**YH-100/150**	N11200056	1000	450	150	143.0	64.4	2148	365	180	64.0
100	**YH-100/350**	N11200057	1000	450	350	143.0	64.4	5010	565	180	94.0
100	**YH-100/500**	N11200058	1000	450	500	143.0	64.4	7157	725	180	118.0
200	**YH-200/150**	N11200059	2000	900	150	286.0	128.7	4253	410	250	137.0
200	**YH-200/350**	N11200060	2000	900	350	286.0	128.7	9924	620	250	198.0
200	**YH-200/500**	N11200061	2000	900	500	286.0	128.7	14177	780	250	244.0

Dimensions YH

Model	YH-5/30	YH-5/80	YH-5/150	YH-10/30	YH-10/80	YH-10/150	YH-10/250	YH-20/50	YH-20/150	YH-20/250	YH-30/200	YH-30/350
A, mm	160	210	280	175	225	295	395	195	310	410	355	510
B, mm	190	290	430	205	305	445	645	245	460	660	555	860
C, mm	138	188	258	150	200	270	370	167	282	382	345	500
D, mm	55	55	55	67	67	67	67	85	85	85	102	102
E, mm	30	30	30	43	43	43	43	60	60	60	75	75
F, mm	22.4	22.4	22.4	32	32	32	32	42	42	42	55	55
H, mm	31	31	31	35	35	35	35	22	37	37	46	46
I, mm	44	44	44	50	50	50	50	59	59	59	64	64
J, mm	–	–	–	–	–	–	–	–	–	–	50	50
K, mm	4	4	4	5	5	5	5	5	5	5	10	10
L, mm	17	17	17	20	20	20	20	–	22	22	28	28
O, mm	M18 x 1.5	M18 x 1.5	M18 x 1.5	M27 x 2	M27 x 2	M27 x 2	M27 x 2	M36 x 2	M36 x 2	M36 x 2	M36 x 2	M36 x 2
P, mm	18	18	18	20	20	20	20	23	23	23	28	28
S, mm	–	–	–	–	–	–	–	–	–	–	51	51
U, mm	–	–	–	–	–	–	–	–	–	–	–	–
V, mm	M27 x 2	M27 x 2	M27 x 2	M36 x 2	M36 x 2	M36 x 2	M36 x 2	–	M45 x 2	M45 x 2	M36 x 2	M36 x 2
W, mm	27	27	27	33	33	33	33	40	40	40	45	45
X, mm	M55 x 1.5	M55 x 1.5	M55 x 1.5	M67 x 1.5	M67 x 1.5	M67 x 1.5	M67 x 1.5	M85 x 2	M85 x 2	M85 x 2	M102 x 2	M102 x 2

Model	YH-50/150	YH-50/350	YH-50/500	YH-70/150	YH-70/350	YH-100/50	YH-100/150	YH-100/350	YH-100/500	YH-200/150	YH-200/350	YH-200/500
A, mm	325	525	685	335	540	265	365	565	725	410	620	780
B, mm	475	875	1.185	485	890	315	515	915	1.225	560	970	1.280
C, mm	313	513	673	321	526	250	350	550	710	391	601	761
D, mm	125	125	125	146	146	180	180	180	180	250	250	250
E, mm	95	95	95	112	112	135	135	135	135	190	190	190
F, mm	70	70	70	80	80	100	100	100	100	140	140	140
H, mm	55	55	55	58	58	66	66	66	66	80	80	80
I, mm	70	70	70	79	79	90	90	90	95	105	105	105
J, mm	65	65	65	75	75	90	90	90	90	127	127	127
K, mm	12	12	12	14	14	15	15	15	15	19	19	19
L, mm	31	31	31	35	35	–	–	–	–	–	–	–
O, mm	M45 x 2	M45 x 2	M45 x 2	M50 x 3	M50 x 3	M65 x 3	M65 x 3	M65 x 3	M65 x 3	M90 x 3	M90 x 3	M90 x 3
P, mm	31	31	31	35	35	40	40	40	40	55	55	55
S, mm	51	24	24	24	24	24	24	30	30	30	30	30
U, mm	–	–	–	–	–	110	110	110	110	160	160	160
V, mm	M45 x 2	M45 x 2	M45 x 2	M50 x 3	M50 x 3	4 x M12	4 x M12	4 x M12	4 x M12	4 x M16	4 x M16	4 x M16
W, mm	50	50	50	60	60	70	70	70	70	80	80	80
X, mm	M125 x 2	M125 x 2	M125 x 2	M146 x 3	M146 x 3	M180 x 3	M180 x 3	M180 x 3	M180 x 3	M250 x 4	M250 x 4	M250 x 4

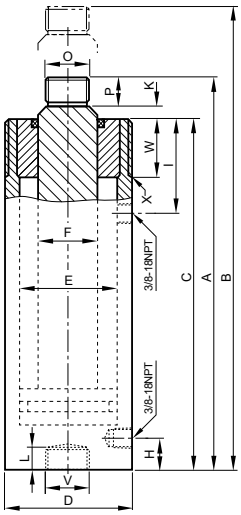

YH-5/30 up to YH 20/250

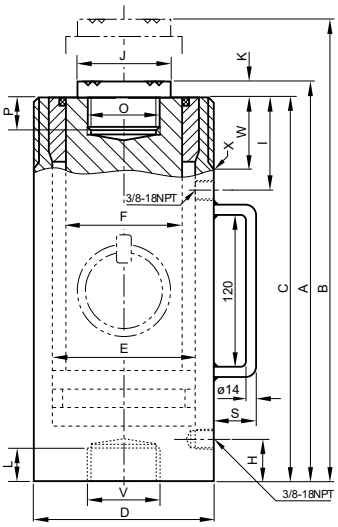

YH-30/200 up to YH 70/350

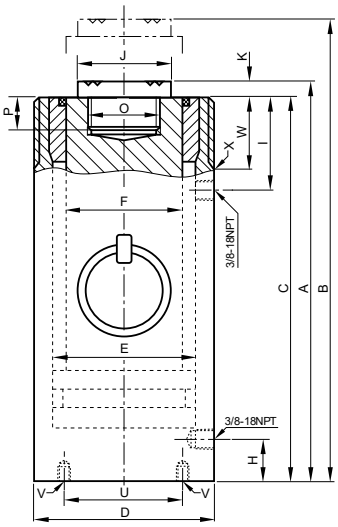

YH-100/50 up to YH 200/500

YEHB
High-tonnage cylinders

Double-acting with hydraulic return, capacity max. 140 - 1100 t

Cylinders of series YEHB are normally used for lifting, positioning or handling heavy loads. The double-acting function allows a faster piston return, even with longer hydraulic hoses.

Lifting and moving of large machinery, steel construction, bridges or similar loads, supporting of buildings and foundations.

Further applications are positioning, weighing, through pressing, stress testing or jacking of all kinds of loads.

Features

- Operating pressure max. 700 bar.
- Double-acting with hydraulic return.
- Generous guiding bands ensure a robust piston guiding.
- Hard chromium-plated piston.
- Stop ring as piston end stop.
- Interchangeable hardened saddle.
- Dirt wiper protects against dirt.
- Oil port thread 3/8 NPT.
- Incl. 2 female coupler halves CFY-1.
- Mounting threads on request.
- All cylinders have lifting rings.

INFO

Selection charts “cylinder/hand pumps” can be found on pages 438 - 439.

Travel-speed charts are supplied on pages 440 - 441.

Technical data YEHB

Cylinder size t	Model	Art.-No.	Capacity max. kN	Stroke mm	Effective plunger area cm²	Oil volume max. cm³	Closed height mm	Cylinder outside diameter mm	Weight kg
140	**YEHB-140/50**	–	1407	50	201	1005	213	210	53
140	**YEHB-140/150**	–	1407	150	201	3016	318	210	74
140	**YEHB-140/300**	–	1407	300	201	6032	478	210	104
220	**YEHB-220/50**	–	2199	50	314	1571	233	260	90
220	**YEHB-220/150**	–	2199	150	314	4712	333	260	120
220	**YEHB-220/300**	–	2199	300	314	9425	498	260	169
310	**YEHB-310/50**	–	3036	50	434	2169	251	305	137
310	**YEHB-310/150**	–	3036	150	434	6506	357	305	189
310	**YEHB-310/300**	–	3036	300	434	13012	512	305	263
410	**YEHB-410/50**	–	4008	50	573	2863	275	350	197
410	**YEHB-410/150**	–	4008	150	573	8588	382	350	262
410	**YEHB-410/300**	–	4008	300	573	17177	538	350	357
520	**YEHB-520/50**	–	5114	50	731	3653	305	400	197
520	**YEHB-520/150**	–	5114	150	731	10959	410	400	262
520	**YEHB-520/300**	–	5114	300	731	21918	566	400	357
610	**YEHB-610/50**	–	5987	50	855	4276	315	430	342
610	**YEHB-610/150**	–	5987	150	855	12829	420	430	440
610	**YEHB-610/300**	–	5987	300	855	25659	576	430	583
830	**YEHB-830/50**	–	8149	50	1164	5821	335	505	504
830	**YEHB-830/150**	–	8149	150	1164	17462	446	505	649
830	**YEHB-830/300**	–	8149	300	1164	34925	606	505	858
1100	**YEHB-1100/50**	–	10644	50	1521	7603	365	570	696
1100	**YEHB-1100/150**	–	10644	150	1521	22808	476	570	869
1100	**YEHB-1100/300**	–	10644	300	1521	45616	636	570	1116

INFO

For tilt saddles for cylinders please see pages 378 - 379.

YELB
Hydraulic cylinders with safety lock nut

Single-acting, gravity return
capacity max. 30 - 1100 t

Hydraulic cylinders with safety lock nut are recommended when loads have to remain in the lifted position over a period of time. The safety lock nut ensures a positive load hold in any position, and work can be carried out beneath the lifted load. Hydraulic pressure can be released so that cylinders work like mechanical supports. Pumps can be separated from cylinders.

Lifting and moving of large machinery, steel construction, bridges or similar loads, supporting of buildings and foundations.

For all heavy-duty jacking applications where a special safety factor is appropriate like lifting and lowering bridges, supporting buildings and foundations, jacking up heavy machines, steel sections, ship modules or similar loads.

Features

- Operating pressure max. 700 bar.
- Single-acting, gravity return.
- Generous guiding bands ensure a robust piston guiding.
- Hard chromium-plated piston with trapezoidal thread.
- Overflow hole ensures a definite piston end stop.
- Interchangeable hardened saddle.
- Oil port thread 3/8 NPT.
- Incl. female coupler half CFY-1.
- All cylinders have lifting rings.

INFO

Further piston strokes are quoted on request.

For tilt saddles for cylinders please see pages 378 - 379.

Technical data YELB

Cylinder size t	Model	Art.-No.	Capacity max. kN	Stroke mm	Effective plunger area cm²	Oil volume max. cm³	Closed height mm	Cylinder outside diameter mm	Weight kg
30	**YELB-30/50**	–	303	50	44	221	141	100	9
30	**YELB-30/100**	–	303	100	44	442	191	100	12
30	**YELB-30/150**	–	303	150	44	663	246	100	15
30	**YELB-30/200**	–	303	200	44	884	296	100	18
30	**YELB-30/300**	–	303	300	44	1325	405	100	25
50	**YELB-50/50**	–	496	50	71	354	153	125	14
50	**YELB-50/100**	–	496	100	71	709	203	125	19
50	**YELB-50/150**	–	496	150	71	1063	261	125	25
50	**YELB-50/200**	–	496	200	71	1418	311	125	30
50	**YELB-50/300**	–	496	300	71	2126	416	125	40
100	**YELB-93/50**	–	929	50	133	664	180	170	31
100	**YELB-93/100**	–	929	100	133	1327	230	170	40
100	**YELB-93/150**	–	929	150	133	1991	285	170	50
100	**YELB-93/200**	–	929	200	133	2655	335	170	59
100	**YELB-93/300**	–	929	300	133	3982	441	170	78
140	**YELB-140/50**	–	1407	50	201	1005	195	210	52
140	**YELB-140/100**	–	1407	100	201	2011	245	210	65
140	**YELB-140/150**	–	1407	150	201	3016	309	210	83
140	**YELB-140/200**	–	1407	200	201	4021	359	210	96
140	**YELB-140/300**	–	1407	300	201	6032	465	210	125
220	**YELB-220/150**	–	2192	150	314	4712	328	260	134
220	**YELB-220/300**	–	2192	300	314	9425	488	260	201
310	**YELB-310/150**	–	3037	150	434	6506	351	305	197
310	**YELB-310/300**	–	3037	300	434	13012	511	305	289
410	**YELB-410/150**	–	4008	150	573	8588	370	350	274
410	**YELB-410/300**	–	4008	300	573	17177	530	350	395
520	**YELB-520/150**	–	5114	150	731	10959	395	400	378
520	**YELB-520/300**	–	5114	300	731	21918	555	400	535
610	**YELB-610/50**	–	5987	50	855	4276	311	430	347
610	**YELB-610/150**	–	5987	150	855	12829	421	430	472
610	**YELB-610/300**	–	5987	300	855	25659	581	430	654
830	**YELB-830/50**	–	8149	50	1164	5821	348	505	537
830	**YELB-830/150**	–	8149	150	1164	17462	458	505	709
830	**YELB-830/300**	–	8149	300	1164	34925	618	505	959
1085	**YELB-1100/50**	–	10644	50	1520	7603	392	570	772
1085	**YELB-1100/150**	–	10644	150	1520	22808	502	570	991
1085	**YELB-1100/300**	–	10644	300	1520	45616	673	570	1332

INFO

Selection charts “cylinder/hand pumps” can be found on pages 438 - 439.

Travel-speed charts are supplied on pages 440 - 441.

YEGB
High-tonnage cylinders

Single-acting, gravity return
capacity max. 140 - 1100 t

These inexpensive cylinders of series YEGB are used for all general lifting applications in any area of industry where heavy loads need to be lifted, lowered, levelled, positioned or supported.

Lifting and moving large machinery, steel construction, bridges or similar loads, supporting buildings and foundations.

For all heavy-duty jacking applications where a special safety factor is appropriate like lifting and lowering bridges, supporting buildings and foundations, jacking up heavy machines, steel sections, ship modules or similar loads.

Features

- Operating pressure max. 700 bar.
- Plunger in special piston guiding bands.
- Hard chromium-plated piston.
- Overflow hole ensures a definite piston end stop.
- Interchangeable hardened saddle.
- Oil port thread 3/8 NPT.
- Incl. female coupler half CFY-1.
- All cylinders have lifting rings.

INFO

Further piston strokes are quoted on request.

The use of tilt saddles is recommended.

Selection charts “cylinder/hand pumps” can be found on pages 438 - 439.

Travel-speed charts are supplied on pages 440 - 441.

AYB
Tilt saddles for cylinders

Tilt saddles should be used with YELB and YEGB cylinders in cases where cylinders are operated on non-parallel surfaces.

The saddles minimize inner friction caused by eccentric loading of the cylinders. The upper part of the saddle can pivot up to 5° in all directions. Tilt saddles are fixed in the piston by means of an O-ring.

INFO

Available for all cylinder series YELB, YEGB and YEHB.

Technical data YEGB

Cylinder size t	Model	Art.-No.	Capacity max. kN	Stroke mm	Effective plunger area cm²	Oil volume max. cm³	Closed height mm	Cylinder outside diameter mm	Weight kg
140	**YEGB-140/50**	–	1407	50	201	1005	160	210	43
140	**YEGB-140/150**	–	1407	150	201	3016	274	210	74
140	**YEGB-140/300**	–	1407	300	201	6032	430	210	116
220	**YEGB-220/50**	–	2200	50	314	1571	180	260	75
220	**YEGB-220/150**	–	2200	150	314	4712	291	260	120
220	**YEGB-220/300**	–	2200	300	314	9425	451	260	187
310	**YEGB-310/50**	–	3036	50	434	2169	193	305	110
310	**YEGB-310/150**	–	3036	150	434	6506	309	305	176
310	**YEGB-310/300**	–	3036	300	434	13012	469	305	267
410	**YEGB-410/50**	–	4008	50	573	2863	215	350	161
410	**YEGB-410/150**	–	4008	150	573	8588	325	350	244
410	**YEGB-410/300**	–	4008	300	573	17177	485	350	364
520	**YEGB-520/50**	–	5114	50	731	3653	225	400	221
520	**YEGB-520/150**	–	5114	150	731	10959	335	400	329
520	**YEGB-520/300**	–	5114	300	731	21918	495	400	486
610	**YEGB-610/50**	–	5987	50	855	4276	236	430	268
610	**YEGB-610/150**	–	5987	150	855	12829	346	430	393
610	**YEGB-610/300**	–	5987	300	855	25659	506	430	574
830	**YEGB-830/50**	–	8149	50	1164	5821	263	505	411
830	**YEGB-830/150**	–	8149	150	1164	17462	373	505	583
830	**YEGB-830/300**	–	8149	300	1164	34925	533	505	834
1085	**YEGB-1100/50**	–	10644	50	1521	7603	292	570	582
1085	**YEGB-1100/150**	–	10644	150	1521	22808	402	570	801
1085	**YEGB-1100/300**	–	10644	300	1521	45616	573	570	1142

Technical data AYB

Model	Art.-No.	Suitable for cylinder groups	Weight kg
AYB-50	–	YELB-30 and YELB-50	0.4
AYB-93	–	YELB-93	0.8
AYB-140	–	YELB-140, YEGB-140, YEHB-140	2.0
AYB-220	–	YELB-220, YEGB-220, YEHB-220	3.4
AYB-310	–	YELB-310, YEGB-310, YEHB-310	13.0
AYB-410	–	YELB-410, YEGB-410, YEHB-410	on request
AYB-520	–	YELB-**520**, YEGB-**520**, YEHB-**520**	on request

Other sizes on request

Dimensions AYB

Model	AYB-50	AYB-93	AYB-140	AYB-220	AYB-310	AYB-410	AYB-520
L, mm	50	71.5	94	113	139	159	179
N, mm	34	30	39.2	43	68.5	78	77
O, mm	71	71	97	126	175	210	230

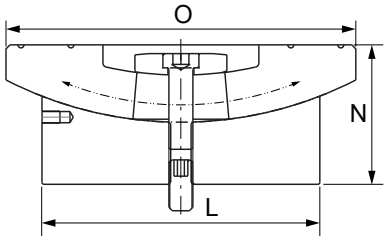

AYS
Lifting claws, piston plates, base adaptors and extension tubes, load-spreading plates

Lifting claws

In connection with the corresponding hydraulic cylinder a lifting claw represents a compact, lightweight and versatile lifting unit. The lifting claws are screwed onto the collar thread of cylinder series YS. Claws can be placed under loads with minimum clearance.

When operating lifting claws, the following aspects have to be considered:

The hydraulic cylinders need to be able to support themselves against the load. The max. force of the cylinder is reduced by 50 %.

Piston plates

Piston plates can be screwed into the piston thread of cylinder series YS. They reduce the surface pressure and prevent the pistons from sinking into the ground. Also when using a piston plate in connection with a lifting claw the cylinder must be supported against the load.

Base adaptors and extension tubes

Extension tubes are mounted onto the bottom of cylinders series YS by means of the base adaptor and two hexagon socket screws (screws are included with the base adaptor). The use of extension tubes adds to the versatility of the standard cylinders.

Load-spreading plates

These load-spreading plates are recommended when slim cylinders are used for lifting operations. They prevent the cylinders from falling over and sinking into the ground. Robust steel design with carrying handle.

AYS-101
151
231

Straightening of a container box by use of a hydraulic cylinder YS-10/100, extension tube AYS-106, base adaptor AYS-103 and electric power pump PY-04/2/5/2 M.

Lifting of a container by use of an hydraulic cylinder YS-23/160, lifting claw AYS-23 and piston plate AYS-232 powered by a two-stage hand pump HPS-2/2 with base frame.

Technical data AYS

Model	Art.-No.	Description	Suitable for cylinder	Weight kg
AYS-10	N14500303	Lifting claw, permissible capacity 5 t	YS-10/…	0.9
AYS-15	N14500304	Lifting claw, permissible capacity 8 t	YS-15/…	1.3
AYS-23	N14500311	Lifting claw, permissible capacity 12 t	YS-23/…	3.8
AYS-53	N14500672	Base adaptor, 5 t	YS-5/…	0.5
AYS-54	N14500673	Extension tube 125 mm, 5 t	YS-5/…	0.9
AYS-55	N14500674	Extension tube 250 mm, 5 t	YS-5/…	1.5
AYS-56	N14500675	Extension tube 500 mm, 5 t	YS-5/…	2.8
AYS-101	N14500678	Load-spreading plate 10 t	YS-10/…	10.5
AYS-102	N14500324	Piston plate, round	YS-10/…	1.5
AYS-103	N14500336	Base adaptor, 10 t	YS-10/…	0.7
AYS-104	N14500337	Extension tube 125 mm, 10 t	YS-10/…	1.2
AYS-105	N14500338	Extension tube 250 mm, 10 t	YS-10/…	2.2
AYS-106	N14500339	Extension tube 500 mm, 10 t	YS-10/…	3.9
AYS-107	N14500340	Extension tube 750 mm, 10 t	YS-10/…	5.9
AYS-151	N14500681	Load-spreading plate 15 t	YS-15/…	10.5
AYS-152	N14500325	Piston plate, round	YS-15/…	1.8
AYS-153	N14500506	Base adaptor, 15 t	YS-15/…	0.9
AYS-154	N14500507	Extension tube 125 mm, 15 t	YS-15/…	1.6
AYS-155	N14500508	Extension tube 250 mm, 15 t	YS-15/…	2.9
AYS-156	N14500509	Extension tube 500 mm, 15 t	YS-15/…	4.9
AYS-157	N14500510	Extension tube 750 mm, 15 t	YS-15/…	7.9
AYS-231	N14500684	Load-spreading plate 23 t	YS-23/…	10.5
AYS-232	N14500326	Piston plate, round	YS-23/…	2.2

Dimensions AYS

Model	AYS-10	AYS-15	AYS-23	AYS-53	AYS-54	AYS-55	AYS-56	AYS-101	AYS-102	AYS-103	AYS-104	AYS-105
A, mm	90	110	125	53	125	250	500	230	140	58	125	250
B, mm	90	110	125	50	–	–	–	120	12	60	–	–
C, mm	30	30	30	–	–	–	–	58	–	–	–	–
D, mm	29	34	40	–	–	–	–	–	–	–	–	–
E, mm	22	25	35	–	–	–	–	–	–	–	–	–
F, mm	M57 x 1.5	M67 x 1.5	M85 x 2	M42 x 1.5	M42 x 1.5	M42 x 1.5	M42 x 1.5	–	M27 x 2	M50 x 2	M50 x 2	M50 x 2

Model	AYS-106	AYS-107	AYS-151	AYS-152	AYS-153	AYS-154	AYS-155	AYS-156	AYS-157	AYS-231	AYS-232
A, mm	500	750	230	140	70	125	250	500	750	230	160
B, mm	–	–	120	12	73	–	–	–	–	120	15
C, mm	–	–	68	–	–	–	–	–	–	86	–
D, mm	–	–	–	–	–	–	–	–	–	–	–
E, mm	–	–	–	–	–	–	–	–	–	–	–
F, mm	M50 x 2	M50 x 2	–	M33 x 2	M60 x 2	M60 x 2	M60 x 2	M60 x 2	M60 x 2	–	M40 x 2

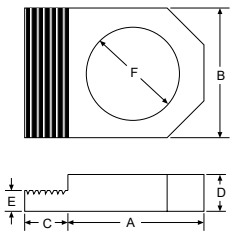

Lifting claws

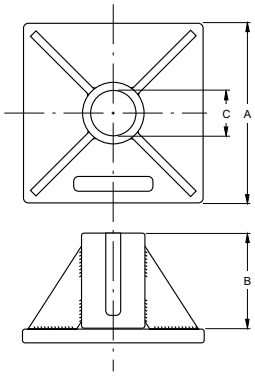

Load-spreading plates

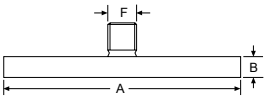

Piston plate, round

Base adaptor

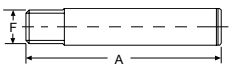

Extension tube

AYP
Threaded flanges

In case hydraulic cylinders have to be inserted into fixtures, press frames or similar devices, these steel flanges can be very handy. Material: weldable steel.

Technical data AYP

Model	Art.-No.	Suitable for cylinder	Weight kg
AYP-1010	N13700670	YS-10/…	9.7
AYP-1510	N13700671	YS-15/… and YH-10/…	12.6
AYP-2310	N13700672	YS-23/… and YH-20/…	12.1
AYP-5010	N13701058	YS-50/… and YH-50/…	19.6
AYP-10010	N13701059	YS-100/… and YH-100/…	46.0

Dimensions AYP

Model	AYP-1010	AYP-1510	AYP-2310	AYP-5010	AYP-10010
A, mm	M57 x 1.5	M67 x 1.5	M85 x 2	M125 x 2	M180 x 3
B, mm	220	220	220	250	330
C, mm	200	200	200	250	330
D, mm	30	40	40	50	70
E, mm	120	120	120	225	300
F, mm	150	150	150	225	300
G, mm	M12	M12	M12	Ø 13.5	Ø 17.5
H, mm	M8	M8	M8	M8	M8

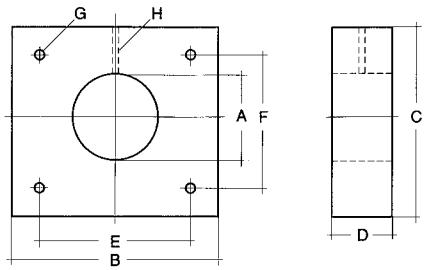

AYP

AYH
Clevis eye mountings

Clevis eye mountings are screwed onto the piston and bottom of the hydraulic cylinder whenever mounting conditions require a pivoting of the cylinder.

Technical data AYH

Model	Art.-No.	Suitable for cylinder	Suitable for	Weight kg
AYH-5-1	N14500808	YH-5/30, YH-5/80, YH-5/150	Cylinder base	0.3
AYH-5-2	N14500809	YH-5/30, YH-5/80, YH-5/150	Piston	0.3
AYH-10-1	N14500810	YH-10/30, YH-10/80, YH-10/150, YH-10/250	Cylinder base	0.6
AYH-10-2	N14500811	YH-10/30, YH-10/80, YH-10/150, YH-10/250	Piston	0.6
AYH-20-1	N14500812	YH-20/150, YH-20/250	Cylinder base	2.1
AYH-20-2	N14500813	YH-20/150, YH-20/250	Piston	2.1

Dimensions AYH

Model	AYH-5-1	AYH-5-2	AYH-10-1	AYH-10-2	AYH-20-1	AYH-20-2
A, mm	M27 x 2	M18 x 1.5	M36 x 2	M27 x 2	M45 x 2	M36 x 2
B, mm	–	35	–	40	–	70
C, mm	35	35	38	38	50	50
D, mm	35	35	42	42	65	65
E, mm	15	15	25	25	35	35
F, mm	16	16	20	20	30	30
G[1], mm	M35 x 1.5	–	M40 x 1.5	–	M70 x 2	–
H, mm	–	–	–	21	–	24
J, mm	18	–	21	–	23	–

[1] G = retainer nut according to DIN 981

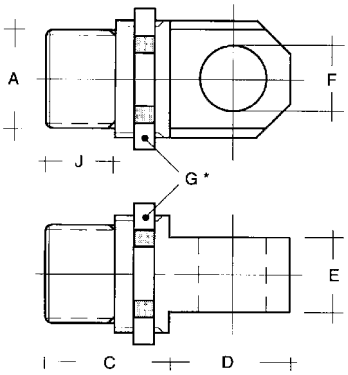

AYH-…-1 for cylinder base

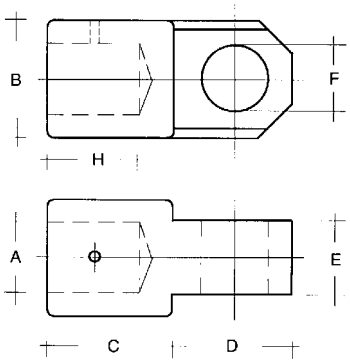

AYH-…-2 for piston

INFO

Build-up and description of Yale hand pumps

Hand pumps are the most common power source within the area of “High-Pressure Hydraulic Tools”. For this reason our hand pumps have been carefully designed and equipped with many details which make the pumps very versatile and handy in every-day applications.

Relief valve/hand wheel

The fine-adjustment relief valve in connection with the large hand wheel allows millimeter increments when lifting and lowering even highest loads. The fact that sometimes hundreds of tons are controlled by this hand wheel underlines the importance of this feature.

Sturdy “all-metal-design"

The robust pump head and the absence of any plastic parts result in a long service life and easy maintenance over many years. Plastic reservoirs filled with oil may present a fire risk in connection with welding or similar work!

Carrying handle

A handy carrying handle on all our hand pumps facilitates transportation enormously.

Pressure relief valves

All hand pumps are equipped with two pressure relief valves. They are easily adjustable from outside if pumps must be re-adjusted or a lower operating pressure should not be exceeded.

Reservoir ventilation

All hand pumps are equipped with a reservoir ventilation plug. This ensures perfect suction of hydraulic oil and allows you to use the total oil capacity of the reservoir.

Two-stage output

All hand pumps have two-stage design (except HPS-1/0,7). This allows an increased speed and efficient working during unloaded conditions of the hydraulic cylinder. The switch-over from the low pressure to the high pressure stage is done automatically.

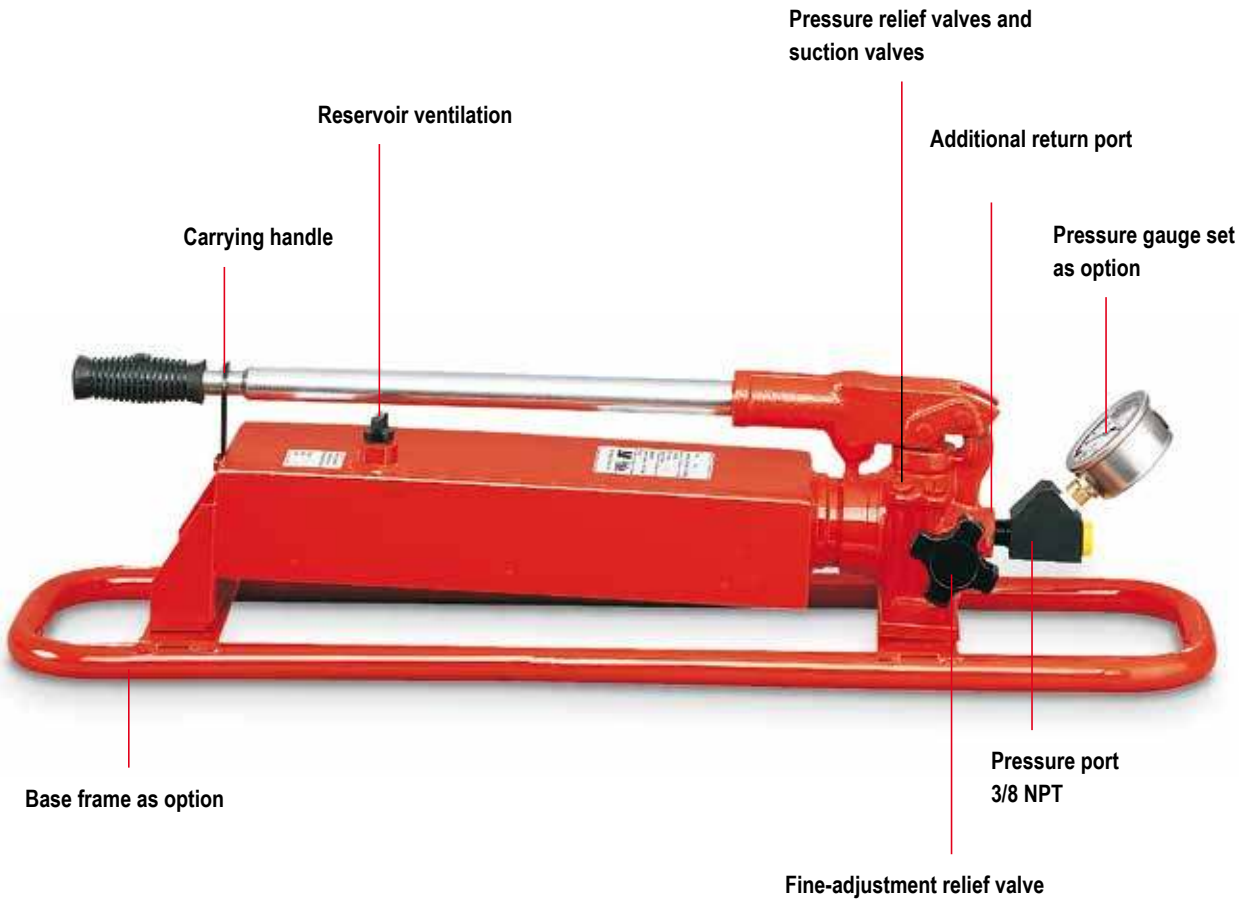

Delivered ready to use

All hand pumps are supplied ready to use incl. hydraulic oil.

Easy-maintenance-design

There is no need to disassemble the hand pumps in case of service work. All parts like suction and pressure valves, seals, packings etc. are accessible from the outside.

All hand pumps have the same design

The same design (build-up) for all hand pumps with the exception of the reservoirs allows the interchangeability of all components. Therefore spare part stocks can be kept to an absolute minimum. Only one spare part kit is necessary to service all hand pumps.

Excellent suction properties

Hand pumps suck and displace 100 % of their volume per stroke. This results both in a high efficiency as well as a rapid cylinder movement.

Interchangeability

All hydraulic cylinders, hand pumps and other components are fully interchangeable and can be combined with all other 700 bar hydraulic lines. All components have the standard oil port and same coupler parts.

Additional return oil port

All hand pumps are equipped with a return port to the reservoir. This detail is very advantageous as many hand pumps are integrated in more complex hydraulic circuits.

Base frame

On request you can get base frames for the most common hand pumps. These base frames add to the stability and protection of the hand pumps, in particular when used in the field or on a construction site.

Pressure gauge

Appropriate pressure gauges with the corresponding adaptors are shown in this catalogue.

Hand pump HPH-…

With integrated pressure gauge GGY-631 and gauge adaptor set GA-704.

Hand pumps for double-acting cylinders with relief valve and 4/3-way directional valve

Unlike conventional pumps, all hand pumps of the model HPH (with 4/3-way directional valve for double-acting cylinders) include a precision relief valve in addition to the directional control valve. Manual directional control valves switch over abruptly, thus causing undesired pressure surges in the system under load.
The additional relief valve in all HPH-hand pumps allows a precise lowering of the load without any pressure shocks. All components have the standard oil port and same coupler parts.

Further advantage of this design:

The pressure gauge shows the pressure as pushing and as pulling force. The combination of a 4-way directional valve with a sensitive relief valve allows a controlled pressure relief without pressure shocks.

INFO

INFO

Selection charts “cylinder/hand pumps” can be found on pages 438 - 439.

HPS
Hand pumps for single-acting cylinders

Hand pumps are easy to use and operate independently of any external energy source. They are designed for a maximum 700 bar system pressure and will allow each hydraulic cylinder to utilize its maximum capacity.

The two-stage system reduces pumping time.
Stage 1 allows rapid piston travel under no load or light load conditions. The pump automatically switches to stage 2 when the piston is loaded and a higher force is required from top. The hand pump is an all-steel construction designed for rough use and has a high-efficiency pumping action. The handle can be locked for easy carrying.

The large and easy-to-control return valve allows the operator to precisely control the return stroke. Other standard features include a large and easy-to-control hand wheel, air bleeding and oil filling plug, large support feet for stability, tilted tank to increase usable oil volume and ergonomic handle grip.

Features

- Operating pressure max. 700 bar.
- Two-stage operation with automatic switch-over (except HPS-1/0,7 A).
- Large reservoir volumes.
- With pressure relief valves, adjustable from the outside.
- Precision-adjustable relief valve (handwheel).
- Robust all-steel construction.
- HPH-pumps are equipped with a 4-way control valve plus a precision-adjustable relief valve.
- Oil port thread 3/8 NPT.
- Incl. oil filling.

Optional

- Pressure gauges with corresponding adaptors are also available as accessories.

INFO

Hydraulic hoses are the connection between hand pump and hydraulic cylinders and need to be selected separately. Please see page 413.

Technical data HPS

Model	Art.-No.	Displacement	Reservoir volume cm³	Displacement 1st stage cm³	Displacement 2nd stage cm³	Weight kg
HPS-1/0,7 A	N12101011	single-stage	700	–	2	7.0
HPS-2/0,3 A	N12101127	two-stage	300	5	1	3.5
HPS-2/0,7 A	N12101012	two-stage	700	11	2	7.0
HPS-2/1,3 A	192085595	two-stage	1300	11	2	9.0
HPS-2/2 A	N12101013	two-stage	2000	11	2	10.0
HPS-2/4 A	N12101014	two-stage	4000	11	2	13.0
HPS-2/6 A	N12101015	two-stage	6000	11	2	21.0
HPS-2/10 A	N12101016	two-stage	10000	11	2	27.0

Dimensions HPS

Model	HPS-1/0,7 A	HPS-2/0,3 A	HPS-2/0,7 A	HPS-2/1,3 A	HPS-2/2 A	HPS-2/4 A	HPS-2/6 A	HPS-2/10 A
A, mm	505	410	505	630	520	645	645	800
B, mm	85	100	85	80	70	65	65	65
C, mm	135	105	135	135	145	160	215	250
D, mm	150	125	150	150	150	150	180	190
E, mm	43	35	43	43	43	43	43	43
F, mm	52	35	52	52	52	52	52	52

Dimensions approx.

HPS-1/0,7 A,
HPS-2/0,3 A
up to
HPS-2/1,3 A

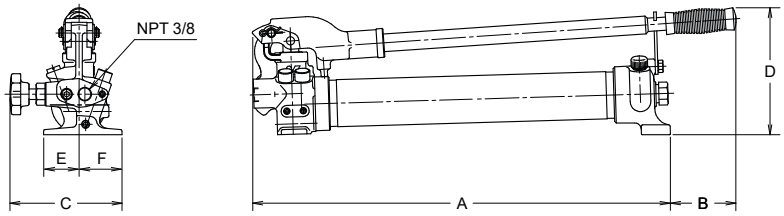

HPS-2/2 A
up to
HPS-2/10 A

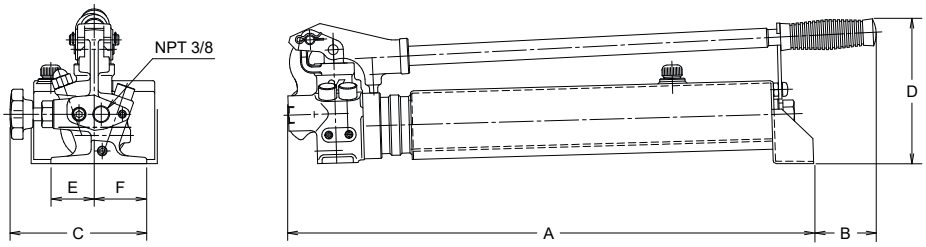

depicted pressure gauge optional

HPH
Hand pumps for double-acting hydraulic cylinders

With 4-way valve and relief valve (hand wheel)

All hand pumps of type HPH are designed as double-acting cylinders. Basically, they do not differ from series HPS, but are equipped with a 4/3-way directional valve.

The precision-adjustable relief valve remains unaffected and permits a sensitive pressure relief.

Optional

- Pressure gauges with corresponding adaptors are also available as accessories.

Technical data HPH

Model	Art.-No.	Displacement	Reservoir volume cm³	Displacement 1st stage cm³	Displacement 2nd stage cm³	Weight kg
HPH-2/0,7 A	N12101018	two-stage	700	11	2	8
HPH-2/2 A	N12101019	two-stage	2000	11	2	11
HPH-2/4 A	N12101020	two-stage	4000	11	2	14
HPH-2/6 A	N12101021	two-stage	6000	11	2	22
HPH-2/10 A	N12101022	two-stage	10000	11	2	28

Dimensions HPH

Model	HPH-2/0,7 A	HPH-2/2 A	HPH-2/4 A	HPH-2/6 A	HPH-2/10 A
A, mm	505	520	645	645	800
B, mm	85	70	65	65	65
C, mm	160	160	160	200	160
D, mm	150	150	150	180	190
E, mm	43	43	43	43	43
F, mm	52	25	52	52	52
G, mm	85	85	85	85	85

Dimensions approx.

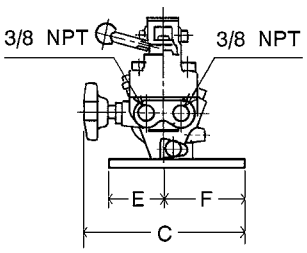

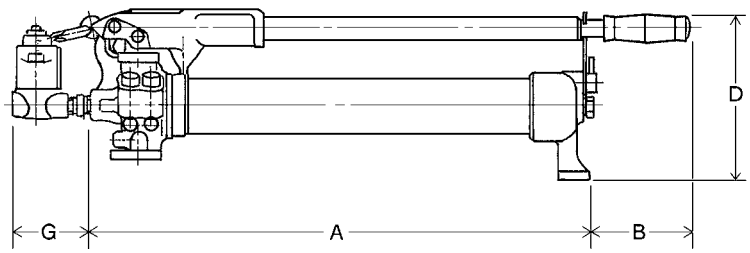

HPB
Base frames for hand pumps

These base frames add to the stability of your hand pump, in particular when used in the field or on a construction site where hand pumps are frequently operated on uneven and soft ground.

At the same time, the hand pumps are protected from sand, humidity and possible damage.

The assembly of the base frames is very easy; just three holes have to be bored to mount the frame to the hand pump.

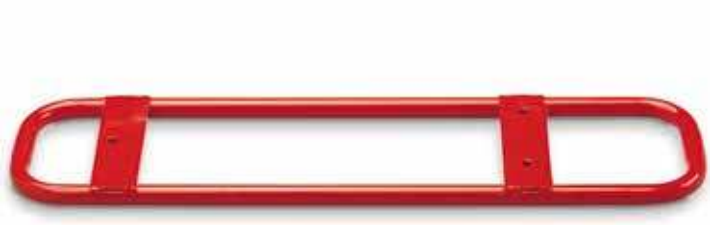

Technical data HPB

Model	Art.-No.	Suitable for hand pump	Weight kg
HPB-2	N14500205	HPS-1/0,7 A + HPS-2/0,7 A + HPS-2/2 A + HPH-2/0,7 A + HPH-2/2 A	1.3
HPB-4	N14500206	HPS-2/4 A + HPS-2/6 A + HPH-2/4 A + HPH-2/6 A	1.8

Dimensions HPB

Model	HPB-2	HPB-4
A, mm	765	885
B, mm	190	190

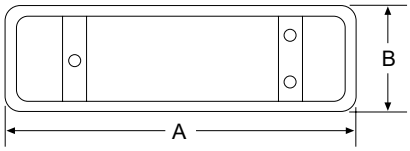

TWAZ
Hand pumps

Operating pressure max. 2000 bar

These high-performance hand pumps allow a very rapid pressure build-up due to their two-stage design. Both pressure stages are equipped with a limiting valve which can easily be adjusted from outside.

High-pressure hand pumps are used for special applications like pressurizing hydraulic nuts and safety couplings, hydrostatic testing, bolt tensioners, high-pressure oil injection for bushing removal, pretensioning anchors, for test applications in laboratories and as a power source within test stands and propeller press systems.

Accessories for hand pumps TWAZ

Optional:
Pressure gauge, GGY-2500.

Optional:
Pressure gauge adaptor, GA-2000.

Optional:
Adaptor, FY-201
(M22 x 1.5 on G 1/4).

Optional:
Hydraulic hoses,
HH-2001-20,
pressure max.: 2000 bar.

Technical data TWAZ

Model	Art.-No.	Pressure max. bar	Reservoir volume cm³	Displacement 1st stage cm³	Displacement 2nd stage cm³	Oil port	Pressure gauge	Pressure gauge model	Pressure gauge adaptor model	Pressure relief valve	Weight kg
TWAZ-0,7	N12201100	2000	700	8	0.6	M22 x 1.5	optional	GGY-2500	GA-2000	yes	7.0
TWAZ-1,3	N12201101	2000	1300	13	1.0	M22 x 1.5	optional	GGY-2500	GA-2000	yes	9.0
TWAZ-2,3	N12201102	2000	2300	31	1.6	M22 x 1.5	optional	GGY-2500	GA-2000	yes	16.0

FPS
Foot pumps

Operating pressure 700 bar

Used to operate single-acting hydraulic cylinders, especially for repeated applications, such as checking of welding samples, pressing of connection components (crimping), actuating of clamping devices, as well as for all applications, where it is necessary to keep hands free.

The pump can be used everywhere, as it is independent of an external energy source and is easily portable. An extremely good stability guarantees a comfortable and safe operation up to the highest pressure. It is a “real” foot operated pump, as the return stroke of the connected hydraulic cylinder is released by foot control.

Features

- Operating pressure max. 700 bar.
- Absolute stability due to large base plate.
- Minimized labour fatigue.
- Operating pressure adjustable. Valves accessible from the outside.
- Return stroke of cylinder also controlled by foot operation.
- Oil port 3/8 NPT.

Optional

- Pressure gauges and suitable adaptors.
- Hydraulic hoses

Technical data FPS

Model	Art.-No.	Operating pressure max. bar	Displacement 1st stage cm³	Displacement 2nd stage cm³	Reservoir volume useable cm³	Weight kg
FPS-2/0,5 A	N12501128	700	11	2	500	7

PY-04/2/5/2M PY-04/2/5/4M

PY-04
Electric motor pumps, portable

Operating pressure max. 700 bar

These light-weight but powerful two-stage pumps are particulary designed for maintenance and repair jobs. Depending on their type, they can either operate single-acting or double-acting hydraulic cylinders.

The ideal combination of manually operated valve and remote pendant control provides the operator with ample freedom of motion and ensures a safe “holding of the load”.

The remote pendant control (1.5 m) is used to start the motor even under full load. The function for both manual valves is as follows: - **advance** - **hold** - **return** -
With their light weight and convenient carrying handle, these pumps can be easily transported. Pumps are equipped with thermal overload protection and are supplied with hydraulic oil:

Operation of the power pump PY-04/2/5/2E:

By activating push-button number 1, the motor starts and the cylinder advances. In the neutral position the pressure is held. By activating push-button number 2, the solenoid valve is activated, the pressure decreases and the hydraulic cylinder retracts.

Operation of the power pump PY-04/2/5/2M:

The 2/2-way manual valve operates together with a pilot operated unloading valve, so that the two valve positions result in the following two control possibilities:

Valve handle position 1:
Cylinder holds pressure after motor stop.

Valve handle position 2:
Cylinder automatically retracts after motor stop.

Technical data PY-04

Model	Art.-No.	Control valve	Operating pressure max. bar	No load stroke l/min up to 30 bar	Under load stroke l/min up to 700 bar	Useable reservoir volume l	Connecting value	Cable remote control m	Speed rpm	Protection standard	Weight, without oil, approx. kg
PY-04/2/5/2 M	N12300132	2/2-way manual valve	700	4.0	0.23	5.0	0.37 kW - 230 V-1Ph	1.5	2800	IP 50	24
PY-04/2/5/4 M	N12300193	4/3-way manual valve	700	4.0	0.23	5.0	0.37 kW - 230 V-1Ph	1.5	2800	IP 50	26
PY-04/2/5/2 E	N12300043	2/2-way solenoid valve	700	4.0	0.23	5.0	0.37 kW - 230 V-1Ph	1.5	2800	IP 50	28

PAY
Mini hydraulic pumps, with compressed air driven motor

Operating pressure max. 700 bar

These mini-pumps are driven by an air-powered motor and can be connected to any supply source of compressed air. These compact low-cost pumps can operate all single-acting or double-acting hydraulic cylinders up to a max. operating pressure of 700 bar.

Due to large reservoirs, large cylinders or multiple cylinders can be operated. The use of an inline air filter-lubricator is recommended.

The hydraulic pressure can be infinitely adjusted on the regulator of the air-lubricator unit. The air-driven motor guarantees 100 % explosion protection.

Pumps for double-acting hydraulic cylinders are equipped with an additional 4-way control valve type VHH-4/3. The connected hydraulic cylinder is controlled - **advance** - **hold** - **return** - by the universal pedal, which can be either hand or foot-operated.

Control of cylinder motion

- Pedal in neutral position – motor stands still, cylinder stands, pressure is held.
- Pedal depressed – motor starts, cylinder advances, pressure is built-up.
- Pedal pushed forward – motor stands still, pressure is released, cylinder retracts.

PAY-6-5

PAY-64

PAY-6

Technical data PAY

Model	Art.-No.	For cylinders	Reservoir volume l	Oil pressure max. bar	Oil displacement l/min	Required air pressure bar	Air consumption l/min	Oil port	Air port	Weight kg
PAY-6	N12300133	single-acting	1.5	700	1.28 - 0.14	7	560	3/8 NPT	1/4 NPT	6.3
PAY-6-5	N12300715	single-acting	5.0	700	1.28 - 0.14	7	560	3/8 NPT	1/4 NPT	12.0
PAY-64	N12300279	double-acting	1.5	700	1.28 - 0.14	7	560	3/8 NPT	1/4 NPT	7.5
PAY-64-5	N12300006	double-acting	5.0	700	1.28 - 0.14	7	560	3/8 NPT	1/4 NPT	13.0

INFO

PY-11/3/20/4 M

PY-07/3/10/3 E

PYE and PY
Electric hydraulic power packs

Single-stage and two-stage

Power packs are easy to operate as they are fully assembled and easy to control.

The use of power packs is always recommended when jobs have to be done in a time-saving and efficient way, when repeating jobs have to be finished off, quick cylinder cycles have to be achieved or if large oil volumes in connection with high-tonnage cylinders have to be transmitted.

Two-stage output

The standard power packs are equipped with two-stage pumps, which means that a low pressure stage fills the connected hydraulic cylinder quickly up to a pressure of 80 bar. The high pressure stage is activated automatically from 80 bar up to 700 bar, while the low pressure stage is discharged back to the reservoir. This economic solution avoids heating-up, saves energy and keeps the power packs compact.

Single-stage output PYE

The hydraulic packs have single-stage pumps. These packs deliver between 0 and 700 bar with the same volume (high-pressure stage).

Control/Operation

The motion control of the connected hydraulic cylinder is done by operating the directional valve.

Do you have a single-acting or a double-acting hydraulic cylinder?

The directional control valve has to correspond to the a.m. functional principle of the hydraulic cylinder to be operated. Depending on these principles the power packs are equipped with a:

- 3/3-way valve to operate single-acting hydraulic cylinders (connection with one hydraulic hose)
- 4/3-way valve to operate double-acting hydraulic cylinders (connection with two hydraulic hoses)

The directional control valves are available either as manual or solenoid operated valves.

Operation of the directional valves

Depending on the way of operation, there are manual or solenoid operated valves. Manual valves are controlled by shifting the operating lever and represent the economic way of control.

These valves have 3 lever positions:
- advance - hold - return -

Solenoid valves

Solenoid valves have the advantage that they are controlled by a pendant remote control box which makes the operator independent from the power pack, making it easier for him to monitor the job.

The solenoid valves are controlled by two push-buttons – **advance** – **return** –
In neutral position – **hold** – the valves rest in pressureless circuit. Pressure and force of the connected cylinder are held without pressure drop. The complete electrical set-up (with 24 V control) belongs to the scope of delivery. Solenoid valves allow a very ergonomic operation and offer a quick and precise switching (millimeterwise) of the connected hydraulic cylinder.

Pressureless circuit

In neutral position all directional valves rest in pressureless circuit which means that the oil flow coming from the rotating pump is guided back to the reservoir without creating any pressure build-up.

Special solenoid valve configurations

Some applications require a special valve configuration, e.g. the independent control of several hydraulic cylinders from a single power pack. In such cases the complete valve build-up and electrical control is designed according to customer‘s requirements.

Pressure-guard power packs

By using an electro-hydraulic pressure switch and a special electric control, power packs automatically control their pre-adjusted pressure. In applications where the pressure (load) should be applied over a very long period, the connected power pack is switched on and off automatically and replaces the pre-set pressure in case a pressure drop has occured.

Trolleys

For all power packs we offer a cart-frame for flexible movement from job to job. Cart-frames are equipped with 2 fixed and 2 swivel castors.

Oil cooler

For certain applications, especially when power packs are continuously operated and the oil temperature could exceed 60 °C, the use of an oil cooler is recommended.

Hydraulic oil

All power packs are designed for an operation with standard hydraulic oil (specification ISO VG 32).
For certain operating conditions the viscosity class of the hydraulic fluid can be varied.
All power packs are supplied including oil.

Features

- Robust packs, also capable for contiuous applications.
- Suitable for all jobs in workshops and on construction sites where hydraulic force is required; supplied ready to use.
- On-off motor switch and 3 m motor connecting cable.
- With carrying handles, oil level gauge, oil filler/resevoir ventilation plug.
- Incl. pressure gauge GGY-631.
- Two-stage displacement, which means a rapid advance without load, as well as an automatic switch into the 2. phase by a congruous load.
- Low noise level due to standard motors with 1450 U/min.
- Futher motor voltage and oil resevoirs on request.
- With manual or solenoid operated directional valves.
- Solenoid valves with 3 m remote control box (with 2 push-buttons) and pressure set valve as standard. Adjustable from 0 - 700 bar.
- 24 V - low voltage control includes a sturdy metal electric control box and ready to use set up.

INFO

Two-stage electric hydraulic power packs, 700 bar

Model	Reservoir size				Control valve (directional valve)				Motor power	Displacement, two-stage	
					manual valve		solenoid valve			approx. l/min	approx. l/min
	10 l	20 l	30 l	50 l	3/3-way	4/3-way	3/3-way	4/3-way	kw	0 - 80 bar	80 - 700 bar
PY-07/3/10/3 M	•	–	–	–	•	–	–	–	0.75	6.0	0.6
PY-07/3/10/4 M	•	–	–	–	–	•	–	–	0.75	6.0	0.6
PY-07/3/20/3 M	–	•	–	–	•	–	–	–	0.75	6.0	0.6
PY-07/3/20/4 M	–	•	–	–	–	•	–	–	0.75	6.0	0.6
PY-07/3/20/3 E	–	•	–	–	–	–	•	–	0.75	6.0	0.6
PY-07/3/20/4 E	–	•	–	–	–	–	–	•	0.75	6.0	0.6
PY-11/3/20/3 M	–	•	–	–	•	–	–	–	1.1	8.5	1.0
PY-11/3/20/4 M	–	•	–	–	–	•	–	–	1.1	8.5	1.0
PY-11/3/30/3 M	–	–	•	–	•	–	–	–	1.1	8.5	1.0
PY-11/3/30/4 M	–	–	•	–	–	•	–	–	1.1	8.5	1.0
PY-11/3/20/3 E	–	•	–	–	–	–	•	–	1.1	8.5	1.0
PY-11/3/20/4 E	–	•	–	–	–	–	–	•	1.1	8.5	1.0
PY-11/3/30/3 E	–	–	•	–	–	–	•	–	1.1	8.5	1.0
PY-11/3/30/4 E	–	–	•	–	–	–	–	•	1.1	8.5	1.0
PY-22/3/30/3 M	–	–	•	–	•	–	–	–	2.2	18.0	2.1
PY-22/3/30/4 M	–	–	•	–	–	•	–	–	2.2	18.0	2.1
PY-22/3/50/3 M	–	–	–	•	•	–	–	–	2.2	18.0	2.1
PY-22/3/50/4 M	–	–	–	•	–	•	–	–	2.2	18.0	2.1
PY-22/3/30/3 E	–	–	•	–	–	–	•	–	2.2	18.0	2.1
PY-22/3/30/4 E	–	–	•	–	–	–	–	•	2.2	18.0	2.1
PY-22/3/50/3 E	–	–	–	•	–	–	•	–	2.2	18.0	2.1
PY-22/3/50/4 E	–	–	–	•	–	–	–	•	2.2	18.0	2.1

Code explanation

Directional valve : 3 = for single-acting, 4 = for double-acting cylinder, M = manual valve, E = solenoid valve
Reservoir size : in liters (other reservoir sizes on request)
Motor voltage : 3 = 380-420 V, 3-phase (Euro-voltage), 2 = 230 V, 1-phase, (other voltages on request)
Hoist motor : 07 = 0.75 kW, 11 = 1.1 kW, 22 = 2.2 kW, 30 = 3 kW, 55 = 5.5 kW, 75 = 7.5 kW, 110 = 11 kW
Type of motor : PY = electric motor, PAY = air motor, PGY = petrol driven motor (4 cycle)

Single-stage electric hydraulic power packs, 700 bar

Model	Reservoir size				Control valve (directional valve)				Motor power	Displacement l/min
					manual valve		solenoid valve			
	10 l	20 l	30 l	50 l	3/3-way	4/3-way	3/3-way	4/3-way	kw	0 - 700 bar
PYE-03/3/10/3 M	•	–	–	–					0.35	0.3
PYE-03/3/10/4 M	•	–	–	–					0.35	0.3
PYE-07/3/10/3 M	•	–	–	–					0.75	0.6
PYE-07/3/10/4 M	•	–	–	–					0.75	0.6
PYE-07/3/20/4 M	–	•	–	–					0.5	0.6
PYE-11/3/20/3 M	–	•	–	–					1.1	1.0
PYE-11/3/20/4 M	–	•	–	–					1.1	1.0
PYE-11/3/30/4 M	–	–	•	–					1.1	1.0
PYE-22/3/20/3 M	–	•	–	–					2.2	2.1
PYE-22/3/20/4 M	–	•	–	–					2.2	2.1
PYE-22/3/30/4 M	–	–	•	–					2.2	2.1
PYE-22/3/50/4 M	–	–	–	•					2.2	2.1

All valve and reservoir combinations available.

High-performance electric hydraulic power packs, 700 bar, single-stage

Model	Reservoir size				Control valve (directional valve)				Motor power	Displacement l/min
					manual valve		solenoid valve			
	50 l	70 l	100 l	150 l	3/3-way	4/3-way	3/3-way	4/3-way	kw	0 - 700 bar
PYE-40/3/50/4 M	•	–	–	–					4.0	2.7
PYE-55/3/70/4 M	–	•	–	–					5.5	4.0
PYE-75/3/100/4 M	–	–	•	–					7.5	6.0
PYE-110/3/150/4 M	–	–	–	•					11.0	8.0
PYE-180/3/150/4 M	–	–	–	•					18.0	12.0

All valve and reservoir combinations available.

Hydraulic power pack with protection cage

This power pack is specially designed for general lifting applications in construction areas. Equipped with an optimized valve configuration, including 4-way manual directional valve VHP-4/3-1, safety-check valve VSM-21, pressure relief valve VPR-1 and two pressure gauges for permanent load control.

Hydraulic power pack with 4-way manifold MY-44-GYA

The most economic way for a pressure-independent and individual control of four single-acting hydraulic cylinders. The additionally mounted safety-check valve VSM-21 avoids uncontrolled pressure drops, and the built-in throttle valve allows a precise (millimeterwise) lowering even of the highest loads. Four pressure gauges allow a permanent reading of the individual loads. On request, the power packs can be equipped with a handy cart-frame to make the operation flexible. This type of power pack can be supplied in all sizes of the PY and PYE series.

Hydraulic power pack with 4-times solenoid valve

The quadruple solenoid valve block ensures a pressure-independent and individual control of four double-acting hydraulic cylinders. Solenoid valves offer several well-known advantages such as: ergonomic and safe control by pendant remote control, exact load hold, precise and quick switch characteristics and many more.

Double-hydraulic power pack

In order to realise very high oil flows, two independent pump systems can be combined in one large reservoir. A gear pump ensures an extremely high oil flow up to 250 bar while the high-pressure stage is generated by a high-performance radial piston pump. Each pump is equipped with its own solenoid control valve so that the individual oil flows can be generated or discharged on request.

INFO

The Yale electric power pack PYB

Hand pumps are the most common power source within the area of “High-Pressure Hydraulic Tools”. Using a hand pump can require a higher force. The new cordless power pack PYB is a highly efficient replacement for a standard hydraulic hand pump.
Adding this pump to our sales programme enables us to offer four pump types - giving the user more flexible options to choose from.

Relief valve

The fine-adjustment relief valve in connection with the lever allows millimeter increments when lifting and lowering even the highest loads. The fact that sometimes hundreds of tons are controlled by this hand wheel underlines the importance of this feature.

Robust aluminium/metal construction

The aluminium die-cast housing ensures low weight and protects the battery. Plastic reservoirs filled with oil may present a fire risk in connection with welding or similar hot work!

Shoulder belt

A shoulder belt can be attached to the lifting eyes making it easier to carry the pump.

Pressure relief valves

The electric power packs PYB are equipped with two internal pressure relief valves.
The high pressure stage is set to a maximum operating pressure of 700 bar, to avoid over-pressurization of the system.

NEW DEVELOPMENT

CORDLESS TECHNOLOGY!

FOR MOBILE OPERATION

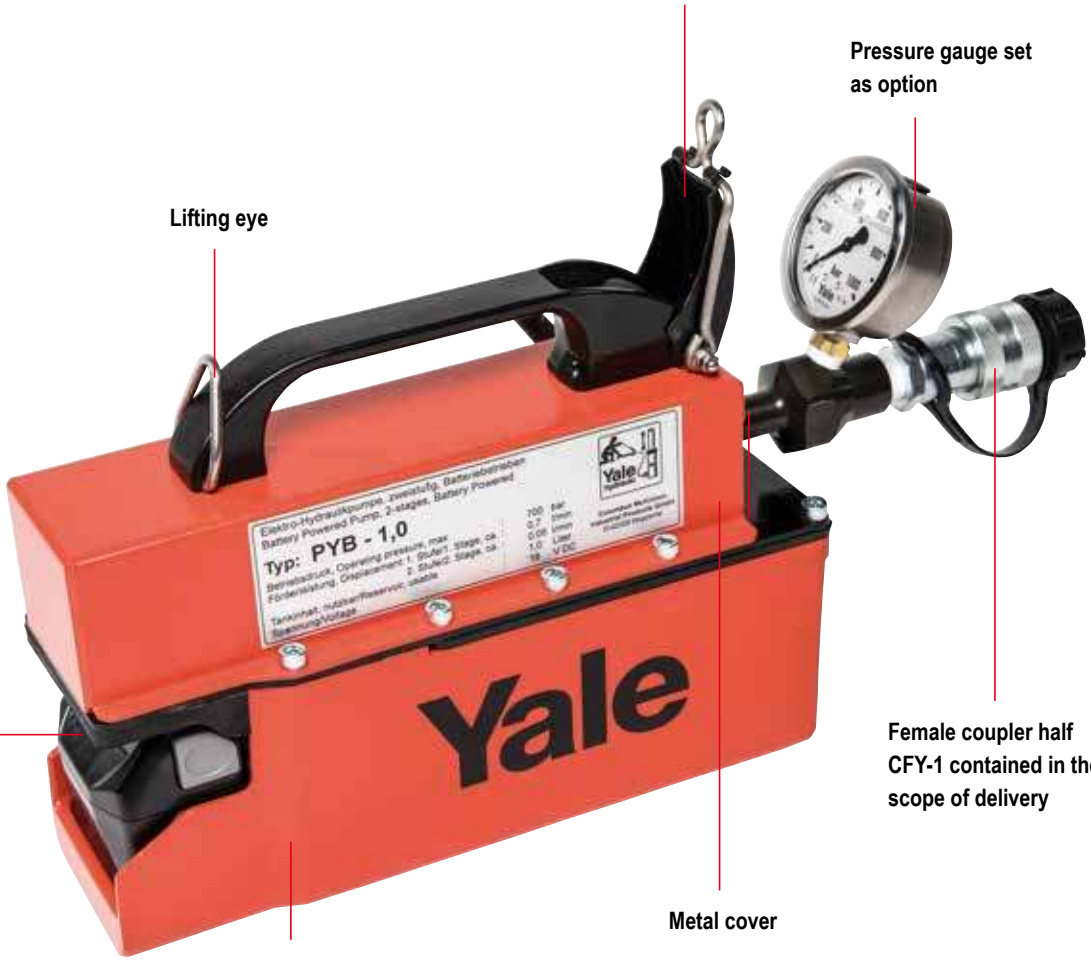

INFO

Rubber tank bladder

The rubber tank bladder of the PYB enables the pump to be used in any position. The total available oil volume can be used.

Two-stage output

Both PYB power packs have a two-stage design. This allows increased speeds and efficient working during unloaded conditions of the hydraulic cylinder. The switch-over from the low pressure to the high pressure stage is done automatically.

Both pumps PYB are “identical”.

Except for the reservoir and the cover both units are identical. Which means that nearly all parts are inter-changeable.
So keeping spare parts can be minimized, e.g. only one seal kit has to be stocked to service both pumps.

Excellent suction properties

Hand pumps draw and displace 100 % of their volume per stroke. This results both in a high efficiency as well as a rapid cylinder movement.

Interchangeability

All hydraulic cylinders, hand pumps and other compo-nents are fully interchangeable and can be combined with all other 700 bar hydraulic lines. The PYB is equipped with a female coupler half CFY-1.

Pressure gauge

Appropriate pressure gauges with the corresponding adaptors are shown in this catalogue.

Cordless power pack:
PYB-1.0 c/w optional gauge adaptor set GYA-63.

Battery and charger

The Batterys and chargers are HiKOKI original parts and are commercially available. Which means every customer can decide if and how many Batterys and chargers they want to order with Columbus McKinnon or if they want to purchase the necessary parts locally.

Possible applications and devices to be combined

Lifting wedges
HK-16T
16 t

Spreading wedges
YSW-14T,
14 t

Low-profile and flat cylinders
YLS and YFS,
10 - 100 t

Spreaders
YHS,
0,5 - 1,5 t

Nut splitters
YNS/YNS-AH,
SW 11 - 89 mm

PYB-1,0
with optional
pressure gauge
GYA-63

PYB-0,6

PYB
Elektric power pack, battery driven

Operating pressure max. 700 bar

The Yale PYB cordless power pack provides a flexible edition to the Yale hydraulic programme.

This extremely compact and lightweight power pack gives the user the freedom to operate in areas where there is no power source, increasing productivity over the conventional hand pump and all at the push of a button.
The power pack utilises a standard HiKOKI LI-ION battery and charger to maximize operation.

Ideal for a range of applications using small to mid size single-acting cylinders, hydraulic spreaders, lifting wedges nut splitters and much more.

Features

- Operating pressure max. 700 bar.
- One-Hand-Operation. Push-button integrated into ergonomic handle.
- Two-stage operation with automatic switch-over.
- With internal pressure relief valve.
- Reservoir made from aluminium, extreme low weight.
- Protective cover to prevent inadvertent switch on of pump.
- Rubber tank bladder enables the pump to be used in any position.

Optional/Accessories

Standard HiKOKI Batterys (Typ BSL36A18x2) and chargers are exclusively used.

- Battery PYB-BAT, 18 V, weight 0.7 kg
  Art.-No. 192043950
- Quick-charger PYB-CHARG,
  230 V and 12 V (car plug socket incl.)
  Art.-No. 192043961
- Pressure gauge set GYA-63 consisting of:
  Gauge GGY 632, Ø 63 mm, 0 - 1000 bar and adaptor.
  Art.-No. N14200497
- Hydraulic hose HHC (to complete the connection a male coupler half CMY-1 is required)

Scope of delivery

- Electric power pack, battery driven
- Oil filled ready for work
- Female coupler half CFY-1
- Shoulder belt

Ideal application in combination with compact, portable hydraulic tools like spreaders, lifting wedges, low profile and flat cylinders as well as nut splitters

Technical data PYB

Model	Art.-No.	Displacement	Reservoir volume cm³	Displacement 1st stage l/min	Displacement 2nd stage l/min	Weight without battery kg	Operational weight c/w battery kg
PYB-0,6	192043421	two-stage	600	0.7	0.06	4.8	5.5
PYB-1,0	192043988	two-stage	1000	0.7	0.06	5.7	6.4

Dimensions PYB

Model	PYB-0,6	PYB-1,0
A, mm	245	290
B, mm	100	100
C, mm	120	120
D, mm	200	229
E, mm	148	166
F, mm	88	106

Dimensions approx.

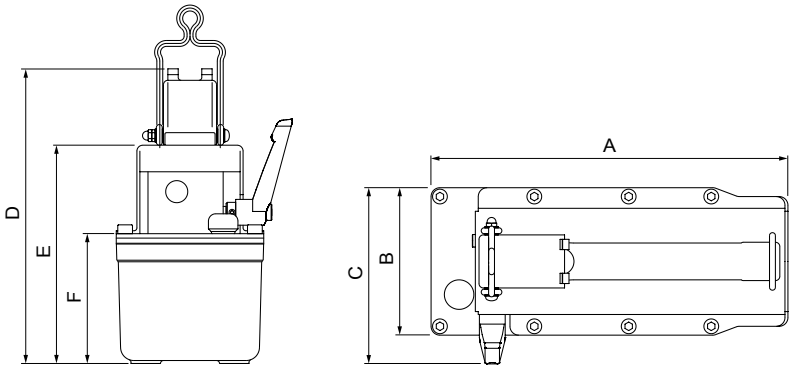

INFO

Battery and charger are NOT supplied in the standard scope of delivery. These items must be ordered separately.

Comparison

Cylinder size t	Hand pump No. of pump strokes for 10 mm stroke HPS-2/0,7 A up to HPS-2/10 A LP	Hand pump HPS-1/0,7 A up to HPS-2/10 A HP	Electric power pack PYB Piston travel speed in mm/s LP	Electric power pack PYB HP
5	1	4	16.2	1.4
10	1	7	8.2	0.7
15	2	11	5.4	0.5
20	2	14	4.1	0.35
21	2	15	3.8	0.33
23	3	17	3.5	0.3
30	3	22	2.7	0.23

LP = Low-pressure stage (unloaded stroke)
HP = High-pressure stage (loaded stroke)

Shoulder belt

Hydraulic hose
HHC

Optional pressure gauge set
GYA-63

Quick-charger
PYB-CHARG

Battery
PYB-BAT

One-Hand-Operation
Push-button integrated into ergonomic handle.

PMF-15/3/40/4 x 3 M

INFO

All extra loads can be meter-read permanently.

PMF Multiple-flow hydraulic power packs

Multiple-flow hydraulic pumps can advance four cylinders with the same speed at the same time by injecting equal amounts of hydraulic oil into each individual cylinder. This principle allows a synchronized lifting of machines or similar loads from a central point. Even under different loading conditions the cylinders advance in synchronisation.

Levelling of a lopsided load is easily possible by an individual control of each single cylinder. The lifting phase is initiated by a push-button remote control box and can be interrupted and continued at any time.

Lowering of the load is done by operating the directional valve in connection with the throttle valve individually for each circuit. The multiple-flow pumps can drive all kinds of hydraulic cylinders, machine jacks or stage lifts.

Features

- 4-point synchronized lift due to 4 equal, independent and individual oil flows.
- 4 manually operated directional valves, or 4 solenoid directional valves allow an individual or joint control of all 4 connected cylinders (easy levelling of loads).
- Safe load hold due to check valve in each circuit.
- One-man central operation.
- Motor on-off switch by means of a pendant remote control box in connection with manual valves
- A complete remote control box to operate the solenoid valves.

Optional

- All pump packs are also available with 4/3 direction-valves (for controlling the double-acting hydraulic cylinders).
- All power packs can be supplied with a protection frame suitable for on-site operation.
  Also cart-frames with 2 fixed and 2 swivel castors are available on request.

Scope of delivery

For each of the four circuits the ready-to-use supply includes: glycerine-damped pressure gauge, 3-way control valve, safety-check valve, a female coupler-half as connecting port. Furthermore: hydraulic oil, carrying handles, motor on-off switch, motor connecting cable, pendant remote control, electro-box with transformer and motor relais, oil level gauge and oil-filler/ventilation plug. All multiple-flow power packs are also available with 4-way directional valves in order to operate double-acting hydraulic cylinders.

PMF
4-multiple-flow power packs with solenoid directional valves

4-multiple-flow power packs with solenoid directional valves to advance 4 hydraulic cylinders independently and in a synchronized way by means of solenoid valves with a pendant remote control box.
The solenoid valves in connection with safety-throttle valves allow a precise control of all connected hydraulic cylinders.

PMF-15/3/40/4 x 4 E

Technical data PMF

Model	Art.-No.	Operating pressure max. bar	Displacement l/min	Manual valve	Solenoid valve	Motor remote control	Reservoir size l	E-motor
PMF-07/3/20/2 x 3 M	N12300047	2 x 700	2 x 0.3	•	–	•	20	0.75 kW - 400 V - 3 Ph
PMF-07/3/20/2 x 3 E	–	2 x 700	2 x 0.3	–	•	–	20	0.75 kW - 400 V - 3 Ph
PMF-15/3/20/2 x 3 M	192018656	2 x 700	2 x 0.6	•	–	•	20	1.5 kW - 400 V - 3 Ph
PMF-15/3/20/2 x 3 E	–	2 x 700	2 x 0.6	–	•	–	20	1.5 kW - 400 V - 3 Ph
PMF-15/3/40/4 x 3 M	N12300924	4 x 700	4 x 0.3	•	–	•	40	1.5 kW - 400 V - 3 Ph
PMF-15/3/40/4 x 3 E	N12300003	4 x 700	4 x 0.3	–	•	–	40	1.5 kW - 400 V - 3 Ph
PMF-30/3/40/4 x 3 M	N12300007	4 x 700	4 x 0.6	•	–	•	40	3.0 kW - 400 V - 3 Ph
PMF-30/3/40/4 x 3 E	N12300005	4 x 700	4 x 0.6	–	•	–	40	3.0 kW - 400 V - 3 Ph
PMF-55/3/100/4 x 3 E	–	4 x 700	4 x 1.0	–	•	–	100	5.5 kW - 400 V - 3 Ph
PMF-110/3/100/4 x 3 E	–	4 x 700	4 x 2.1	–	•	–	100	11.0 kW - 400 V - 3 Ph

INFO

All multiple-flow power packs are also available with 4-way directional valves in order to operate double-acting hydraulic cylinders model PMF.

This port can easily be used to connect a pressure gauge and a pressure relief valve (e.g. VPR-1). The oil port T shall always be connected to the reservoir without any back pressure.

VHP and VHH Directional valves

Manually operated, 700 bar

These directional valves control the oil flow in combination with hydraulic power packs (YHH-4/3 with hand pumps).

All valves have 3 lever positions to control movement of the connected hydraulic cylinder:

1. Left: cylinder advance.
2. Middle: cylinder neutral (pressureless circuit).
3. Right: cylinder retracts.

In the middle position (hold) the piston of the cylinder stops and the oil flow is guided in a circuit back to the reservoir (P to T). The valves can be flanged directly onto power packs but can also be connected by using hydraulic piping.
In addition, all valves are equipped with a second pressure oil port P at the back of the valve base.

Technical data VHP and VHH

Model	Art.-No.	Pressure max. l/min	Size	Oil ports	Hydraulic symbol	Applications
VHP-3/3-1	N14100718	8 - 16	1	3/8 NPT	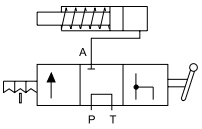	3/3-way valve with “open centre” in middle position (pressureless circuit) to control single-acting hydraulic cylinders
VHP-3/3-2	N14100720	20 - 40	2	3/8 NPT		
VHP-3/3-1 CC	N14100719	8 - 16	1	3/8 NPT	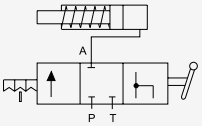	3/3-way valve with “closed centre” in middle position to control single-acting hydraulic cylinders!
VHP-3/3-2 CC	N14100721	20 - 40	2	3/8 NPT		
VHP-4/3-1	N14100227	8 - 16	1	3/8 NPT	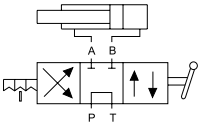	4/3-way valve with “open centre” in middle position (pressureless circuit) to control double-acting hydraulic cylinders
VHP-4/3-2	N14100228	20 - 40	2	3/8 NPT		
VHP-4/3-1 CC	N14100322	8 - 16	1	3/8 NPT	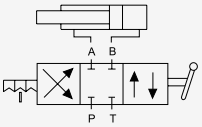	4/3-way valve with “closed centre” in middle position to control double-acting hydraulic cylinders!
VHP-4/3-2 CC	N14100335	20 - 40	2	3/8 NPT		
VHH-4/3	N14100226	2 - 3	small special design	1/4 NPT	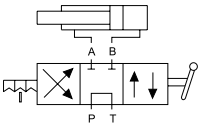	4/3-way valve with “open centre” in middle position (pressureless circuit) to control double-acting hydraulic cylinders. Special design to be mounted directly to all HPS hand pumps (with connecting set FY-703). Also suitable for small hydraulic power packs

VEP
Directional valves

Solenoid incl. pressure set valve, 700 bar

Solenoid operated valves are used to control the connected hydraulic cylinder by means of a pendant remote control or further electrical controls like pressure switches or limit switches.

Control principle

All solenoid valves have 3 positions:
- advance - hold - return -

In neutral position (- hold -) the valves switch to "pressureless circuit" so that the oil flow is guided back to the reservoir while the connected cylinder is safely held under pressure.

Normally, solenoid valves are mounted directly onto power packs but can also be connected by using hydraulic piping.

Design

Long-life, direct-control ball seal valves with leak-free "load hold function" in neutral position.
The solenoids guarantee a very quick reaction of the valves so that cylinders can be controlled millimeterwise.
The valves are suitable for continuous operation (100 % on/off duration).

Modular design

The modular principle allows special valve configurations e.g. control of multiple cylinder systems or specific control sequences.

Pressure adjustment

All solenoid valves are equipped with a precision-adjustable pressure set valve which allows the system pressure (force of cylinder) to be limited to any value from 0 to 700 bar.

VEP-3/3-1 VEP-4/3-1

Pressure gauge

A glycerine-damped pressure gauge GGY-631 is standard with solenoid valves, 0 - 1000 bar, Ø 63 mm.

Mounting flange

The valve flanges are designed in a way that valves (with pressure connector) can easily be mounted onto power packs.

Optional

The connector model FY-905 is to be ordered separately.

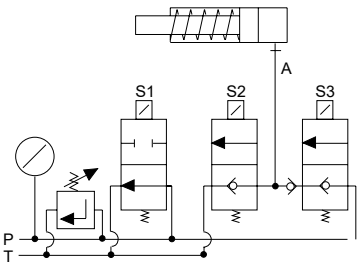

VEP-3/3-1 and VEP-3/3-2
for single-acting cylinders

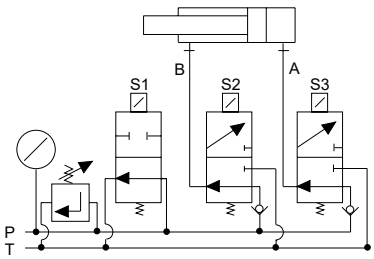

VEP-4/3-1 and VEP-4/3-2
for double-acting cylinders

INFO

If oil ports A and B should have 3/8 NPT the adaptor model FY-30 is to be ordered separately.

Technical data VEP

Model	Art.-No.	Control	For cylinders	Operating pressure max. bar	Size	Oil flow max. l/min	Control voltage	Oil ports P T	Pressure relief valve	Weight kg
VEP-3/3-1	N14100404	3/3-way	single-acting	700	1	12	24 V =	3/8 NPT	yes	4.1
VEP-3/3-2	N14100405	3/3-way	single-acting	700	2	25	24 V =	3/8 NPT	yes	7.9
VEP-4/3-1	N14100403	4/3-way	double-acting	700	1	12	24 V =	3/8 NPT	yes	4.1
VEP-4/3-2	N14100406	4/3-way	double-acting	700	2	25	24 V =	3/8 NPT	yes	7.9

VSM
Safety-check valves

700 bar

These safety-check valves are used for those applications where pressure drops must be avoided (e.g. holding of a lifted load). Depending on the location in a hydraulic circuit, these valves can have different functions.
The model VSM-11 can be directly screwed into the oil port of a hydraulic cylinder and works at this location as a “hose break fuse”. The design of the VSM-21 is suitable for a combination with VHP directional valves.

At this location the VSM-21 ensures that the pressure is held precisely and that pressure drops caused by operating the directional valve are avoided.

Selection advice

If the valve is to be screwed directly into a hydraulic cylinder, please order model VSM-11.

If the valve is to be combined with the directional valve of a power pack, please order model VSM-21.
(see picture on page 410).

Operation

After closing the relief valve (hand wheel) the cylinder can be advanced via the by-pass. In direction to the cylinder the valves always have free flow. The built-in check valve ensures that a pressurized cylinder (e.g. a lifted load) is held precisely in stop position.
A smooth lowering speed can be adjusted by opening the throttle valve (hand wheel) in order to relieve the pressure. A safety pressure valve protects the cylinder from being overloaded by external loading.

Technical data VSM

Model	Art.-No.	Operating pressure max. bar	Control	Oil-port cylinder side A	Oil-port pump side B	Width mm	Weight kg
VSM-11	N14100921	700	Check valve	3/8-18 NPT outer	3/8-18 NPT inner	6	0.9
VSM-21	N14100972	700	Check valve	3/8-18 NPT inner	3/8-18 NPT outer	6	1.0

Dimensions VSM (housing incl. hand wheel)

Model	VSM-11	VSM-21
Length, mm	65	65
Width, mm	60	60
Height, mm	110	110

Hydraulic symbol VSM-21

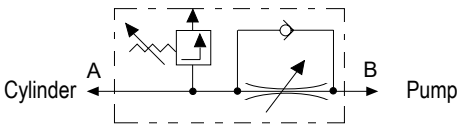

VHM
Throttle-/Shut-off valves

700 bar

These valves are used to shut-off hydraulic lines especially in multiple cylinder systems. The needle valve VHM-1 also allows to throttle an oil flow especially in connection with lifting applications.

VHM-1-E

VHM-2

Technical data VHM

Model	Art.-No.	Operating pressure max. bar	Control	Oil ports both ends	Width mm	Weight kg
VHM-1-E	N14101313	700	Needle	3/8-NPT inner	4	0.7
VHM-2	N14100344	700	Ball	3/8-NPT inner	6	0.9

Dimensions VHM

Model	VHM-1-E	VHM-2
Length, mm	70	75
Width, mm	30	45
Height, mm	80	75

Hydraulic symbol

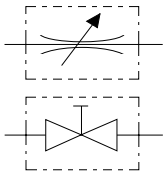

VPS
Pressure switch

Adjustable between 100 - 800 bar

As soon as the pressure has reached the set value, a micro-switch (altering contact) is activated.

This signal can be used:

- For automatic pressure limiting.
- To report a certain pressure value.
- As an automatic motor on/off switch with pressure guard power packs.

Technical data VPS

Model	Art.-No.	Control range bar	Electric data	Oil ports	Difference of switch point bar	Repeat accuracy bar	Weight kg
VPS-1	N14100639	100 - 800	5 A/250 V	3/8 NPT	25 - 70	10	0.5

Dimensions VPS

Model	VPS-1
Height x Width, mm	130 x 85

Hydraulic symbol

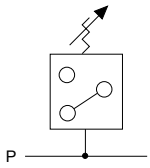

As soon as the pressure has reached the set value, a micro-switch (alternating contact) is activated. Should the pressure drop, the micro-switch starts the pump again in order to rebuild the pressure.

VPR
Pressure relief valves

0 - 700 bar

Pressure relief valves are used it the system pressure (force of the connected hydraulic cylinder) should not exceed a certain value. These precision valves can be easily adjusted and are characterized by precise repetition. The question of a pressure relief valve only depends on the displacement of the high pressure stage of the power pack.

After achieving the set pressure value, the excessive oil is guided back to the reservoir (pressureless).

Technical data VPR

Model	Art.-No.	Control range bar	Oil ports P	Oil ports T	Oil flow max. l/min	Weight kg
VPR-1	N14100722	0 - 700	G 3/8	G 1/4	10	0.8

Dimensions VPR

Model	VPR-1
Length, mm	120
Ø, mm	40

Hydraulic symbol

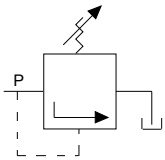

MY
Manifolds

700 bar

Manifolds are used when several hydraulic cylinders have to be connected to one hydraulic pump. All manifolds are equipped with 3/8 NPT inner oil ports, so that fittings, hydraulic hoses and couplers can easily be attached.
To connect a manifold directly to a hand pump a FY-1 double nipple is recommended.
Each manifold is supplied with three steel blind plugs in case not all the oil ports are required.

Technical data MY

Model	Art.-No.	Oil ports	Weight kg
MY-1	N14100164	6 x 3/8-NPT inner	0.5
MY-2	N14100247	4 x 3/8-NPT inner	0.6
MY-4	N14100198	7 x 3/8-NPT inner	1.4

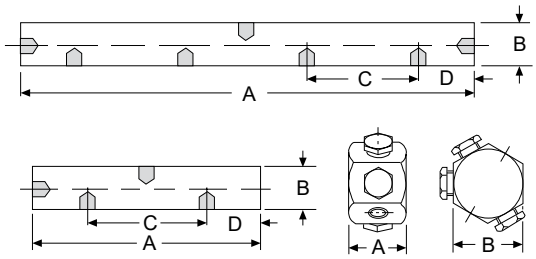

Dimensions MY

Model	MY-1	MY-2	MY-4
A, mm	40	150	330
B, mm	50	40	40
C, mm	–	90	90
D, mm	–	30	30

MY Manifolds

With shut-off valves, 700 bar

Manifolds with shut-off valves are used when different pressures must be maintained in each hydraulic line and therefore allow the lifting of unequal loads. The manifolds are fully assembled and can be screwed directly to a hand pump or power pack. Depending on the way of assembly a short hose HHC-10 and a coupler half CFY-1 can be helpful.

Manifolds models MY ... GYA are equipped with the corresponding number of shut-off valves plus pressure gauge sets (GYA-63) which allow a permanent reading of each individual load.

Technical data MY

Model	Art.-No.	Version	Weight kg
MY-22	N14100503	2-way manifold with 2 shut-off valves	1.8
MY-44	N14100504	4-way manifold with 4 shut-off valves	3.7
MY-66	N14101056	6-way manifold with 6 shut-off valves	5.5
MY-22-GYA	N14101024	2-way manifold with 2 shut-off valves and 2 pressure gauges	2.8
MY-44-GYA	N14101025	4-way manifold with 4 shut-off valves and 4 pressure gauges	5.7
MY-66-GYA	N14101057	6-way manifold with 6 shut-off valves and 6 pressure gauges	8.5

Assembly examples:

Hand pump
HPS-2/2 A with MY-44

Electric hydraulic pump
PY-07/3/20/3 M with VSM-21 and MY-44

HPK-10
Transportation box

For hand pumps, hydraulic cylinders and accessories

For easy transportation and protection of your valuable tools. Large enough to take a hand pump with pressure gauge and hydraulic hose plus several hydraulic cylinders.

The sturdy sheet metal box is equipped with a solid handle and two clasps.

HPK-10
Dimensions (L x W x H): 800 x 300 x 170 mm,
Weight: approx. 7.8 kg.

HFY
Hydraulic oil

For all hand pumps and power packs

The high quality of the Yale hydraulic oil guarantees a long service life for your equipment.

The high grade HLP oil comes as follows:

Features

- Class of viscosity ISO VG 32.
- High lubrication index.
- High pressure resistance
- Favourable temperature/viscosity index.
- Protection against corrosion and cavitation.
- Minimizes the formation of foam and sludge.
- Good derivation of temperature.
- No aging problems
- Good compatibility with all sealing materials.
- Fulfills all requirements of DIN 51524 part 2.

Technical data HFY

Model	Art.-No.	Content l
HFY-1	N14300194	1
HFY-5	N14300195	5
HFY-10	N14301061	10
HFY-20	N14301062	20

GGY
Pressure gauges

The use of pressure gauges is recommended when the operating pressure (the force of the connected cylinder) should be monitored. Yale pressure gauges are equipped with a stainless steel housing and an acrylic plastic face cover plate.

To absorb pressure shocks gauges are glycerine-filled, thus contributing to a long service life. Also, when fitted to a motor pump, the pointer will stay jitterfree.

For the calculation of applied cylinder forces corresponding converting charts (pressure vs. force) can be supplied for all Yale hydraulic cylinders free of charge.

Technical data GGY

Model	Art.-No.	Pressure range bar	Scale diameter mm	Glycerine-damped	Oil port DIN 16288	Spanner size	Accuracy class %
GGY-631	N14100168	0 - 1000	63	yes	G 1/4	14	1.6
GGY-632	N14100663	0 - 1000	63	yes	1/4 NPT	14	1.6
GGY-633	N14100877	0 - 160	63	yes	G 1/4	14	1.6
GGY-634	N14100878	0 - 250	63	yes	G 1/4	14	1.6
GGY-635	N14100879	0 - 400	63	yes	G 1/4	14	1.6
GGY-636	N14100880	0 - 600	63	yes	G 1/4	14	1.6
GGY-1001	N14100169	0 - 1000	100	yes	G 1/2	22	1.0
GGY-1001 SZ[1]	N14100698	0 - 1000	100	yes	G 1/2	22	1.0
GGY-1002	N14100664	0 - 250	100	yes	G 1/2	22	1.0
GGY-1003	N14100696	0 - 400	100	yes	G 1/2	22	1.0
GGY-1004	N14100697	0 - 700	100	yes	G 1/2	22	1.0
GGY-1005	N14101023	0 - 160	100	yes	G 1/2	22	1.0
GGY-2500	N14100658	0 - 2500	100	yes	G 1/2	22	1.6

[1] GGY-1001 SZ = with maximum pointer

GYA-63
Pressure gauge set

Consisting of pressure gauge GGY-632 (diameter Ø 63 mm, glycerine-damped) and corresponding gauge adaptor. This pressure gauge set is suitable for connection to all HPS hand pumps.

Assembled ready to use, compact design with 45° inclination for easy reading.

Technical data GYA-63

Model	Art.-No.	Pressure gauge bar	Oil port pump	Oil port hose	Weight kg
GYA-63	N14200497	0 - 1000 bar, Ø 63 mm, glycerine-damped	3/8-NPT outer	3/8-NPT inner	0.5

GA
Pressure gauge adaptor

Gauge connection with sleeve nut and 30° inclination for easy reading.

Suitable for all hand pumps series HPS.

Technical data GA

Model	Art.-No.	Oil port gauge	Oil port pump	Oil port hose
GA-700	N14200201	G 1/4	3/8-NPT outer	3/8-NPT inner
GA-701	N14200208	G 1/2	3/8-NPT inner	3/8-NPT inner

GA
Pressure gauge adaptor set

For double-acting hand pumps model HPH, for mounting between 4/3-directional valve and hand pump.

Features

- Advantage: shows both the pushing force and the pulling force of the connected hydraulic cylinder.
- 30° inclination for easy reading.
- Pressureless return line by means of telescopic double nipple.

Technical data GA

Model	Art.-No.	Oil port gauge	Oil port	Telescopic nipple
GA-703	N14200202	G 1/2	2 x 3/8-NPT outer	2 x 1/4-NPT outer
GA-704	N14200640	G 1/4	2 x 3/8-NPT outer	2 x 1/4-NPT outer

GA-2000
Pressure gauge adaptor

This pressure gauge adaptor is suitable for connection to all TWAZ hand pumps (2000 bar). Suitable for pressure gauge GGY-2500.

Technical data GA-2000

Model	Art.-No.	Operating pressure max. bar	Oil port gauge	Oil port pump	Oil port hose
GA-2000	N14200419	2.000	G 1/2	M22 x 1.5 outer (with seal cone)	M22 x 1.5 inner (for FY - 201)

CFY, CMY, CCY Hydraulic couplers

Yale hydraulic couplers are self-sealing which means that the coupler halves only have to be closed hand-tight. Both female and male parts have inner balls which seal the coupler halves in uncoupled condition, so that no hydraulic fluid will leak.

Please note that all Yale hydraulic cylinders are equipped with the standard female coupler half CFY-1 and dust cap CDF-9.

Technical data CFY, CMY and CCY

Model	Art.-No.	Description	Oil port thread	Pressure max. bar
CFY-1	N14200166	Coupler half, female (standard)	3/8-NPT, outer	700
CFY-2	N14200482	Coupler half, female	3/8-NPT inner	700
CFY-18	N14200420	Coupler half, female	M18 x 1.5 outer	700
CFY-10-S	N14200814	Coupler half, female	Pipe Ø 10 mm	700
CMY-1	N14200167	Coupler half, male	3/8-NPT, inner	700
CCY-1	N14200165	Coupler halves, female + male	3/8-NPT	700
CDF-9[1]	N14200396	Dust cap, rubber	–	–

[1] fits to female and male coupler halves (standard with all female coupler halves)

Dimensions CFY, CMY and CCY

Model	CFY-1	CFY-2	CFY-18	CFY-10-S	CMY-1	CCY-1
A, mm	–	–	–	–	–	87
B, mm	72	78	72	72	–	–
C, mm	–	–	–	–	40	–
D, mm	35	35	35	35	–	–
E, mm	14	27	24	24	–	–
F, mm	–	–	–	–	32	–

INFO

Hydraulic couplers must always be completely closed, since otherwise the circulation cannot be released.

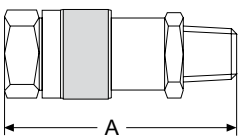

Coupler complete CCY-1

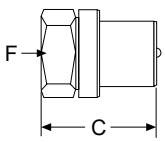

Coupler half, male CMY-1

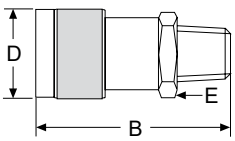

Coupler half, female CFY-1

HHC
Hydraulic hoses

Durable but highly flexible thermoplast hydraulic hoses guarantee a very long life.

The 4-layer build-up includes 2 layers of high tensile steel fabric and robust fitting with 19 mm hexagon.

The volumetric expansion is very low. Hydraulic hoses model HHC are equipped with a male coupler half as standard.

Standard length are as per the chart below, further lengths or hoses with larger diameters are quoted on request.

Technical data HHC

Model	Art.-No.	Length m	Operating pressure bar	Burst pressure bar	Connection 2 male coupler half CMY-1	Connection 1 thread nipple 3/8-NPT, outer	External diameter approx. mm	Bend radius min. mm	Width mm
HHC-5	N14200330	0.5	700	2.800			14	100	6.3
HHC-10	N14200300	1	700	2.800			14	100	6.3
HHC-20	N14200151	2	700	2.800			14	100	6.3
HHC-30	N14200331	3	700	2.800			14	100	6.3
HHC-40	N14200152	4	700	2.800			14	100	6.3
HHC-60	N14200209	6	700	2.800			14	100	6.3
HHC-80	N14200313	8	700	2.800			14	100	6.3
HHC-100	N14200332	10	700	2.800			14	100	6.3
HHC-120	N14200702	12	700	2.800			14	100	6.3
HHC-150	N14200703	15	700	2.800			14	100	6.3

How to order

Hydraulic hose for all standard combinations (- pump - hose - cylinder -):

Order a standard hose with female coupler half HHC-... (e. g. HHC-20).

Hydraulic hose for coupling connections on both sides (both ends with CMY-1):

Order a complete coupler CCY-1 in addition to a standard hose HHC-... (recommended for long hydraulic hoses).

Hydraulic extension hose (one male coupler half, one female coupler half):

Order a female coupler half CFY-2 (inner thread) in addition to a standard hose model HHC-...

Hydraulic hose without any coupler parts (both ends with threaded nipples):

Order model HH-... (both ends 3/8-NPT outer).

FY
Fittings, reducers, connectors

Fittings are useful for versatile combinations of hydraulic cylinders.

Yale high pressure fittings have been designed to give a variety of connections, extensions and combinations. The fittings are designed for a max. system pressure of 700 bar.

For improved sealing of 3/8 NPT connections use two layers of teflon tape and tighten accordingly.

Technical data FY

Model	Art.-No.		Description	Figures	Connection 1	Connection 2
FY-1 **FY-1L**	N14200153 N14200659		Double nipple Double nipple, long	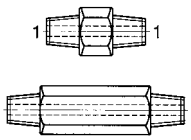	3/8 NPT outer 3/8 NPT outer	– –
FY-13 **FY-17** **FY-18**	N14200244 N14200342 N14200343		Double nipple	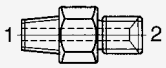	1/4 NPT outer 3/8 NPT outer 3/8 NPT outer	R 1/4 outer M14 x 1.5 (for sleeve nut) R 1/4 outer
FY-2	N14200154		Elbow	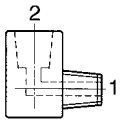	3/8 NPT outer	3/8 NPT inner
FY-3	N14200155		Elbow	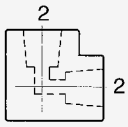	–	3/8 NPT inner
FY-6	N14200158		Cross	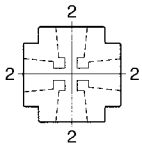	–	3/8 NPT inner
FY-4	N14200156		Tee	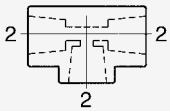	–	3/8 NPT inner

Model	Art.-No.		Description	Figures	Connection 1	Connection 2
FY-5	N14200157		Tee	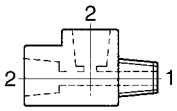	3/8 NPT outer	3/8 NPT inner
FY-7 **FY-11**	N14200159 N14200243		Connection	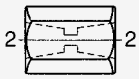	–	3/8 NPT inner 1/4 NPT inner
FY-8 **FY-9**	N14200199 N14200224		Adaptor	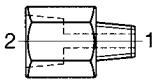	3/8 NPT outer 1/4 NPT outer	R 1/2 inner 3/8 NPT inner
FY-10 **FY-12**	N14200245 N14200246		Adaptor	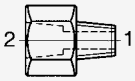	3/8 NPT outer 1/2 NPT outer	1/4 NPT inner 3/8 NPT inner
FY-16 **FY-19** **FY-20** **FY-30** **FY-33**	N14200323 N14200353 N14200354 N14200693 N14200889		Adaptor	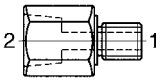	3/8 NPT outer M18 x 1.5 outer M14 outer G 3/8 outer 3/8 NPT outer	M18 x 1.5 inner 3/8 NPT inner 3/8 NPT inner 3/8 NPT inner M14 x 1.5 inner
FY-26 **FY-27**	N14200654 N14200655	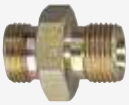	Double nipple	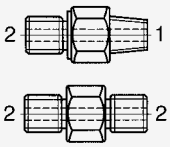	3/8 NPT outer G 3/8 outer	G 3/8 outer G 3/8 outer
FY-31 **FY-32**	N14200694 N14200695		Connection	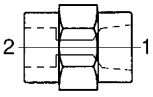	3/8 NPT inner 3/8 NPT inner	M18 x 1.5 inner M20 x 1.5 inner
FY-35	N14200890		Double nipple	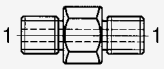	M 14 outer	–
FY-703	N14200203	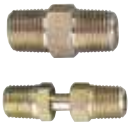	Connecting set for 4/3-way valve to HPS hand pumps (telescopic nipple)	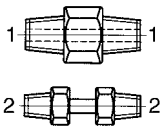	3/8 NPT outer	1/4 NPT outer
FY-201	N14200487		Adaptor for TWAZ hand pumps 2000 bar	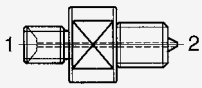	R1/4 outer	M22 x 1.5 outer (with seal cone)

BMZ
Hydraulic puller with integrated hydraulics

Pulling force max. 6, 8 and 11 t

Hydraulic pullers are a valuable tool for the maintenance engineer. The pullers allow time and cost savings as they offer high working safety and can be operated in all positions. Hydraulic pullers are used in all kinds of industries, workshops and in many repair and assembly jobs to remove or install interference fit parts, such as: gears, couplings, bearings, wheels, pulleys, axles, shafts, break drums and many other press fit components.
Damage to parts is minimized through the use of controlled hydraulic power, whilst machine down-time can be reduced drastically.

Features

- Drop-forged alloy steel jaws.
- Hard chromium plated piston, spring return.
- No radial moment of torsion.
- No spindle wear.
- Integrated hydraulic cylinder and pump.
- Quick adjustment with trapezoid speed nut.
- 3 and 2-jaw design.
- Pump lever can rotate through 360°.
- Piston with durable, spring loaded centering tip.
- Supplied in a sturdy plastic box.

Technical data BMZ

Model	Art.-No.	Pulling force max. t	Stroke mm	Weight kg
BMZ-6	N13500610	6	82	4.9
BMZ-8	N13500611	8	82	6.6
BMZ-11	N13500612	11	82	8.0

Dimensions BMZ

Model	BMZ-6	BMZ-8	BMZ-11
Reach max. A, mm	160	200	230
Width Ø max. B, mm	200	250	280
Length C, mm	320	320	345

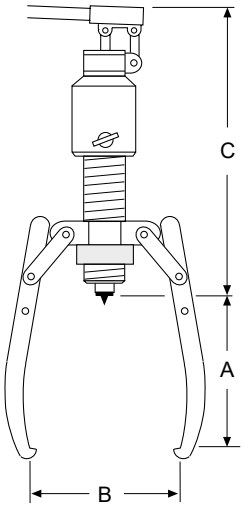

BMZ-1010
BMZ-1510

BMZ-2311

BMZ
Puller sets with separate hydraulics 10, 15 and 23 t

Pulling force max. 10 - 23 t

The harder the pulling force, the tighter the grip of the jaws. Longer jaws up to 1000 mm are available on request.

Features

- High quality components from our standard hydraulic programme.
- Modular system, hydraulic parts can also be used for many other applications.
- Long-life hydraulic cylinders manufactured from chromium-molybdenum steel.
- Two-stage quick-action hand pumps.
- Incl. high pressure hydraulic hose with quick coupler, L = 2.0 m.
- All complete sets are supplied in metal box HPK-10 or wooden case.
- All sets are supplied ready to use.

Scope of delivery:

- Pressure gauge set GYA-63.

Accessories for BMZ-2300 and BMZ-2311: BMZ-2308 extensions of pulling arms increase the reach (A) up to 395 mm. BMZ-2309 up to 495 mm.

Pressure gauge set GYA-63 is part of the scope of delivery.

BMZ-1010 and 1510

The harder the pulling force, the tighter the grip of the jaws. Longer jaws up to 1000 mm are available on request.

BMZ-2311

The radially adjustable pulling arms can be locked in any position.

Technical data BMZ

Model	Art.-No.	Pulling force max. t	Hydraulic cylinder model	Hand pump model	Hydraulic hose model	Stroke of the cylinder mm	Weight kg
BMZ-1000	N13500613	10	without	without	without	–	9.5
BMZ-1010	N13500614	10	with YS-10/150	with HPS-2/0,7 A	HHC-20	150	21.5
BMZ-1500	N13500615	15	without	without	without	–	9.5
BMZ-1510	N13500616	15	with YS-15/150	with HPS-2/0,7 A	HHC-20	150	23.5
BMZ-2300	N13500617	23	without	without	without	–	56.8
BMZ-2311	N13500600	23	with YS-23/160	with HPS-2/0,7 A	HHC-20	160	106.0

Dimensions BMZ

Model	BMZ-1000	BMZ-1500	BMZ-2300
Reach max. A, mm	300	300	190
Width Ø max. B, mm	350	350	700

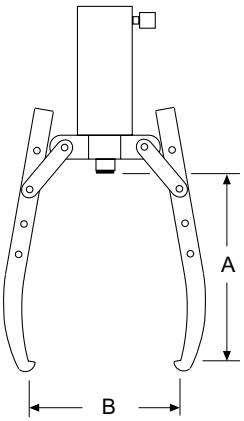

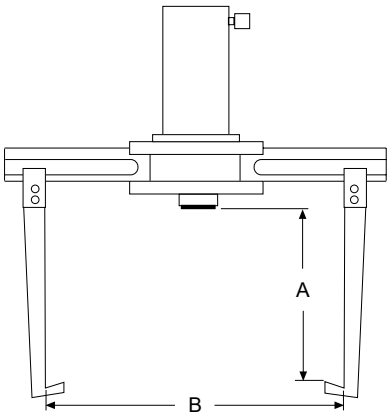

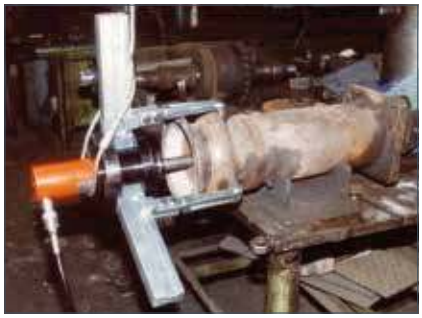

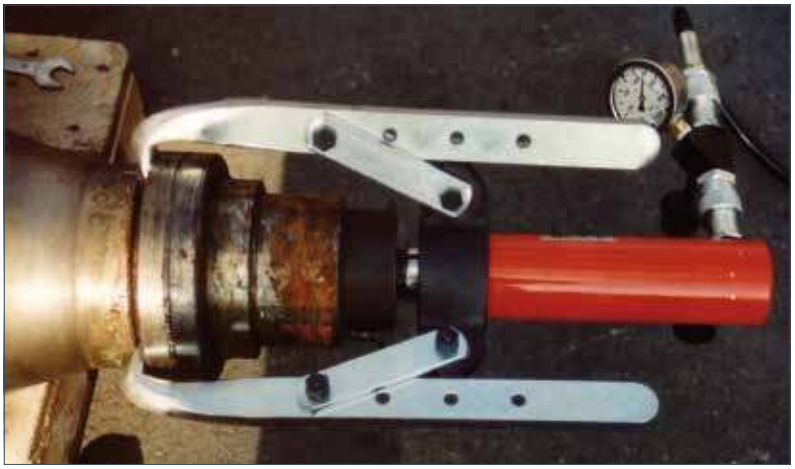

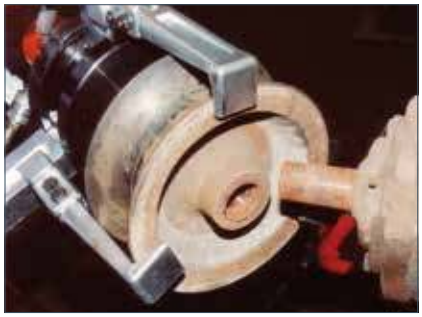

YHP
Hydraulic puller sets

Pulling force max. 10 - 50 t

These professional puller sets are designed for removing and installing press-fitted or heat-fitted parts.

Hydraulic puller sets eliminate time-consuming and costly repairs as they avoid the damage of parts and reduce machine downtimes. All parts are manufactured from high quality drop-forged steel.

Scope of delivery

The complete sets are supplied ready to use and include all necessary components such as hollow cylinder, hydraulic hand pump, pressure gauge (to control the pulling force) and 2 meter hydraulic hose with quick-connect coupler.

INFO

The set “Cross-bearing puller” have reduced max. pulling forces.

3-Grip puller sets

For all pulling jobs where solid parts have to be removed, e.g. gears, belt pulleys, sprockets, flywheels, couplers, shafts, axles etc. The sets can be used as both 3-jaw and 2-jaw puller.

Model	Art.-No.	Pulling force max. t
YHP-252 G	N13500005	20
YHP-352 G	N13500006	30
YHP-552 G	N13500007	50

Cross-bearing puller sets

For all pulling jobs where multi-segmented parts have to be removed: ball bearings, roller bearings and similar parts. Puller sets are supplied complete with bearing puller attachment and bearing cup puller.

Model	Art.-No.	Pulling force max. t
YHP-262 G	N13500008	10
YHP-362 G	N13500009	15
YHP-562 G	N13500010	25

Multi-purpose puller sets

These multi-purpose puller sets are universal combinations of both a.m. sets and include all necessary parts from 3-grip puller set and crosshead puller set.

Model	Art.-No.	Pulling force max. t
YHP-2752 G	N13500011	20/10
YHP-3752 G	N13500012	30/15
YHP-5752 G	N13500013	50/25

Type of puller set

Model	3-grip puller set			Crosshead puller set			Multi purpose puller set		
	YHP-252 G	YHP-352 G	YHP-552 G	YHP-262 G	YHP-362 G	YHP-562 G	YHP-2752 G	YHP-3752 G	YHP-5752 G
Art.-No.	N13500005	N13500006	N13500007	N13500008	N13500009	N13500010	N13500011	N13500012	N13500013
Nennkraft, t	20	30	50	10	20	25	20/10	30/15	50/25
Hand pump, model HPS-1/07 A (part 1)	•	•	–	•	•	–	•	•	–
Hand pump, model HPS-2/2 A (part 1)	–	–	•	–	–	•	–	–	•
Pressure gauge set, model GYA-63 (part 2)	•	•	•	•	•	•	•	•	•
Hydraulic hose, model HHC-20 (part 3)	•	•	•	•	•	•	•	•	•
Hollow cylinder (part 4), model	YCS-21/50	YCS-33/60	YCS-57/70	YCS-21/50	YCS-33/60	YCS-57/70	YCS-21/50	YCS-33/60	YCS-57/70
Triple crosshead (part 5)	•	•	•	–	–	–	•	•	•
Double crosshead (part 6)	•	•	•	–	–	–	•	•	•
Grip arm, 3 pcs. (part 8)	•	•	•	–	–	–	•	•	•
Spindle (part 9)	•	•	•	•	•	•	•	•	•
Strap, 6 pcs (part 10)	•	•	•	–	–	–	•	•	•
Strap screws + strap nuts, 6 pcs. (part 11)	•	•	•	–	–	–	•	•	•
Mounting screws, 2 pcs. (part 13a)	•	•	•	–	–	–	•	•	•
Mounting screws, 2 pcs. (part 13b)	–	–	–	•	•	•	•	•	•
Saddle with internal thread (part 14)	•	•	•	•	•	•	•	•	•
Smooth saddle (part 15)	•	•	•	•	•	•	•	•	•
Slotted crosshead (part 16)	–	–	–	•	•	•	•	•	•
Slide plate, 2 pcs. (part 17)	–	–	–	•	•	•	•	•	•
Nut, 2 pcs. (part 18)	–	–	–	•	•	•	•	•	•
Washer, 2 pcs. (part 19)	–	–	–	•	•	•	•	•	•
Pulling leg, short, 2 pcs. (part 20), mm	–	–	–	280	255	455	280	255	455
Pulling leg, long, 2 pcs. (part 21), mm	–	–	–	460	505	773	460	505	773
Leg end, 2 pcs. (part 24)	–	–	–	•	•	•	•	•	•
Leg connector, 2 pcs. (part 25)	–	–	–	•	•	•	•	•	•
Bearing puller attachment (part 26)	–	–	–	•	•	•	•	•	•
Bearing cup pulling attachment (part 27)	–	–	–	•	•	•	•	•	•
Storage case (part 29)	•	•	•	•	•	•	•	•	•
Weight, kg	40	65	120	46	86	156	91	172	295

The symbols stand for: • including complete set, – not included

Dimensions hydraulic puller set YHP

Model	20 t	30 t	50 t
3-grip A, mm	300	520	700
C, mm	0 - 817	0 - 977	0 - 1233
3-grip B, mm	500	900	1200
D, mm	25 - 155	30 - 250	75 - 330
2-grip A, mm	300	520	700
E, mm	152	250	330
2-grip B, mm	420	700	1000
F, mm	140	150	150
G, mm	30 - 180	75 - 230	75 - 230

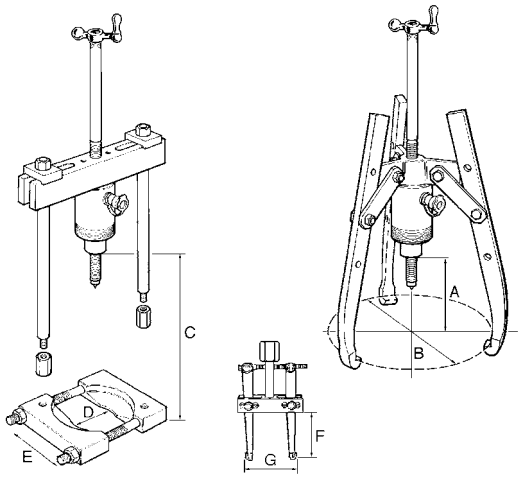

AJH-620

AJS-65

AJS-104

AJH and AJS
Aluminium hydraulic jacks

Capacity 6.5 - 100 t

Aluminium jacks combine light weight with high lifting capacity. The use of high tensile aluminium alloy allows lifting capacities of up to 100 tons resulting in a very favourable 1.8 tons lifting capacity per 1 kg weight ratio. Operation of Yale hydraulic jacks is very simple. Jacks are supplied ready for use, i.e. including hydraulic oil, operating lever and, where applicable, carrying handle and lifting claw.

Aluminium jacks with lifting claw

Jacks from 20 tons are available with a lifting claw. In this case the jacks are provided with an elongated base plate. The max. permissible working load of the lifting claws is 40 % of the jack capacity.

Aluminium jacks with safety lock nut

Jacks from 20 tons can be supplied with a safety lock nut. This device allows absolute safe jacking over a long period. In this case the hydraulic jack can be operated like a mechanical support and the hydraulic system can be totally released.

Application

Hydraulic jacks are universally popular tools for use in workshops or on site for all kinds of lifting and assembly applications, for construction, shipbuilding, power plants, general engineering, metal fabrication and many more. Applications are unlimited. Standard jacks with plain piston and jacks with safety lock nuts cannot be used with a lifting claw. To increase stability, all jacks with long stroke (305 mm) are equipped with an elongated base plate.

Features

- Strokes from 75 - 305 mm.
- Extremely low weight.
- The 6.5 and 10 tons jacks can be operated in any position (also upside down) and are equipped with spring return piston and stop ring.
- The 20 to 100 tons jacks can be operated vertically or with front face in horizontal position.
- All jacks are provided with an overload protection valve.
- From 20 tons capacity with additional mechanical stroke limiter.
- All jacks with hardened alloy steel saddle and sensitive lowering valve which is activated by the operating lever.

AJH-630 SR

Technical data AJH and AJS

Model	Art.-No.	Capacity t	Capacity of lifting claw max. t	Stroke mm	Overall height mm	Base plate mm	Height of lifting claw min. mm	Weight kg
AJS-65	N13200950	6.5	–	75	131	159 x 76	–	3.6
AJS-104	N13200951	10	–	115	182	171 x 76	–	6.3
AJH-620	N13200952	20	–	152	265	180 x 120	–	10.9
AJH-1220	N13200955	20	–	305	440	250 x 120	–	16.7
AJH-630	N13200958	30	–	152	265	200 x 140	–	15.4
AJH-1230	N13200961	30	–	305	452	275 x 140	–	23.4
AJH-660	N13200964	60	–	152	293	250 x 190	–	27.4
AJH-1260	N13200967	60	–	305	500	340 x 190	–	43.7
AJH-6100	N13200970	100	–	152	315	305 x 250	–	49.0

Jacks with lifting claw

Model	Art.-No.	Capacity t	Capacity of lifting claw max. t	Stroke mm	Overall height mm	Base plate mm	Height of lifting claw min. mm	Weight kg
AJH-620 C	N13200953	20	8	152	280	250 x 120	67	14.5
AJH-1220 C	N13200956	20	8	305	452	250 x 120	67	22.2
AJH-630 C	N13200959	30	12	152	284	275 x 140	72	20.3
AJH-1230 C	N13200962	30	12	305	472	275 x 140	72	31.0
AJH-660 C	N13200965	60	24	152	327	340 x 190	72	43.1
AJH-1260 C	N13200968	60	24	305	533	340 x 190	72	64.9

Jacks with safety lock nut

Model	Art.-No.	Capacity t	Capacity of lifting claw max. t	Stroke mm	Overall height mm	Base plate mm	Height of lifting claw min. mm	Weight kg
AJH-620 SR	N13200954	20	–	152	291	180 x 120	–	10.9
AJH-1220 SR	N13200957	20	–	305	464	250 x 120	–	16.7
AJH-630 SR	N13200960	30	–	152	294	200 x 140	–	15.4
AJH-1230 SR	N13200963	30	–	305	480	275 x 140	–	23.4
AJH-660 SR	N13200966	60	–	152	330	250 x 190	–	27.4
AJH-1260 SR	N13200969	60	–	305	536	340 x 190	–	43.7
AJH-6100 SR	N13200971	100	–	152	366	305 x 250	–	53.0

YAM
Machine jacks with lifting claw

Capacity 2 - 15 t

Machine jacks with lifting claw are used in applications where space below the load is restricted, thus preventing the use of traditional lifting equipment.

Typical applications for machine jacks are lifting, positioning and transportation of machines, heavy steel constructions or similar loads, as well as general repair and assembly applications.

The jacks are also useful for applications like leveling of high-rise warehouses, heavy-duty scaffolds, large frameworks etc.

Features

- Offers safe lifting of machines with an extremely low clearance.
- Incl. safety pressure valve to prevent overload.
- Large base offers increased stability under load.
- Pump lever can rotate through 270° (excluding YAM-2).
- Same load can be lifted on either the head or the claw of jack.
- Spring return of the lifting claw (only YAM-5 and YAM-10).
- Precision-adjustable lowering valve.
- Jacks are supplied ready to use incl. pump lever, and are filled with oil.

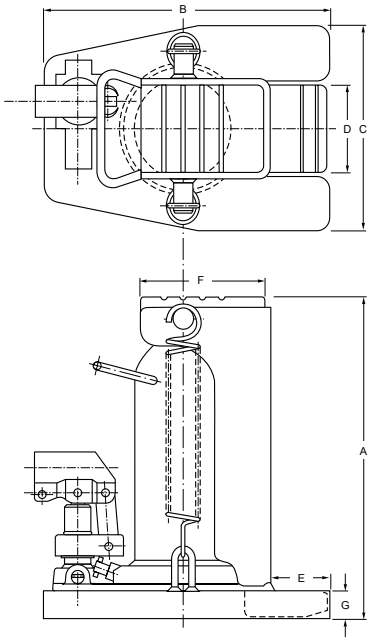

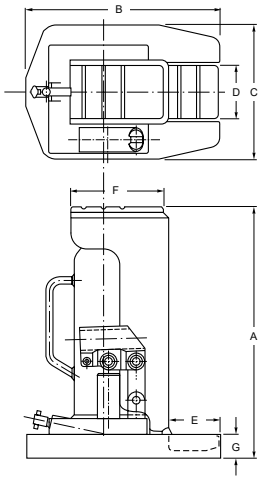

Technical data YAM

Model	Art.-No.	Capacity on the claw t	Stroke mm	Weight kg
YAM-2	N13100912	2	113	8
YAM-5	N13100627	5	120	19
YAM-10	N13100628	10	145	38
YAM-15.1	N13100914	15	140	53

Dimensions YAM

Model	YAM-2	YAM-5	YAM-10	YAM-15.1
A, mm	235	290	325	344
B, mm	180	257	280	321
C, mm	125	182	240	258
D, mm	50	75	100	110
E, mm	50	57	60	60
F, mm	85	117	150	168
G, mm	16	26	33	33

YAP
Hydraulic machine jacks

Capacity 4.5 - 50 t

Hydraulic machine jacks are designed for the safe lifting and positioning of machines and similar heavy equipment.

Features

- These jacks are operated with external pumps, e.g. hand or motor pumps but also with synchronous power packs.
- The compact construction allows operation even in extremely confined areas.
- 3 hook-in positions of the lifting claw provide high flexibility (model YAP-5130 4 hook-in positions).
- The load can be lifted with either the lifting claw or with the head of the jack.
- Welded, distortion-proof steel construction.
- High quality, durable hydraulic components.
- The flat lifting claw allows low jacking height.
- Safe stability due to swivel-mounted support feet.
- The connection between jack and pump is made by a hydraulic hose.
- The jacks are delivered ready-to-use inclusive of carrying handles and coupling half.

Technical data YAP

Model	Art.-No.	Capacity t	Stroke mm	Height for applications min. mm	Pressure max. bar	Weight approx. kg
YAP-5130	N13101114	4.5	133	15	700	13.5
YAP-10150	N13101115	10	155	20	700	23.0
YAP-15150	N13101116	15	155	25	700	40.0
YAP-25150	N13101117	23	155	30	700	60.0
YAP-50150	N13101118	50	155	35	700	165.0

Dimensions YAP

Model	YAP-5130	YAP-10150	YAP-15150	YAP-25150	YAP-50150
A min., mm	15	20	25	30	35
A max., mm	232	273	291	300	375
B, mm	228	277	328	387	540
H, mm	252	283	316	330	405
L, mm	161	194	245	278	375

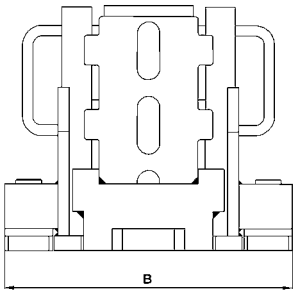

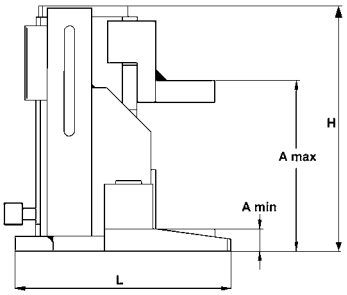

YAS
Hydraulic machine jacks

Capacity 3 - 25 t

Hydraulic machine jacks are designed for the safe lifting and positioning of machines and similar heavy equipment.

Features

- Integrated hydraulic pump.
- Pump lever swivel mounted 270° for operation even in extremely confined areas.
- Same load can be lifted on either the head or the claw of jack.
- Welded, distortion-proof steel construction.
- High quality, durable hydraulic components.
- The flat lifting claw allows low jacking height.
- The additional connect coupler (10 t capacity and larger) for external pump operation, allows connection of hand, motor or synchronous lifting pumps (max. pressure 520 bar).
- Safe stability due to swivel-mounted support feet.
- Sensitive lowering valve for slow lowering of loads without jerks.
- When operating the jack with an external pump the installation of a manometer is mandatory.
- The integrated hydraulic pump is protected by a pressure-limiting valve.
- The jacks are delivered ready-to-use inclusive of carrying handles, hydraulic oil filling and pump lever.
- YAS-15 and YAS-25 with twin pump for higher lifting speed as well as wheels for easy transportation.

Technical data YAS

Model	Art.-No.	Capacity t	Stroke mm	Height for applications min. mm	Pressure max. bar	Weight approx. kg
YAS-3	N13101119	3	140	12	520	15.0
YAS-5	N13101120	5	140	15	520	19.0
YAS-10	N13101121	10	140	20	520	28.0
YAS-15	N13101122	15	140	25	520	50.0
YAS-25	N13101123	25	140	30	520	72.0

Dimensions YAS

Model	YAS-3	YAS-5	YAS-10	YAS-15	YAS-25
A min., mm	12	15	20	25	30
A max., mm	230	232	300	291	300
B, mm	207	228	277	328	387
H, mm	250	252	252	316	330
L, mm	198	216	271	345	388

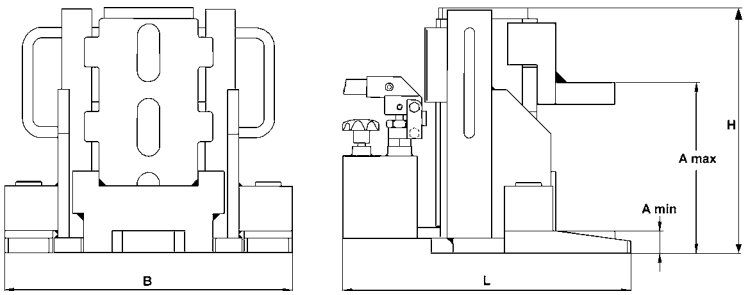

ST
Hydraulic stage lifts

Capacity 50 - 100 t

For compact, low-headroom and universal applications. Stage lifts are hydraulic lifting devices which are designed to lift and lower loads over high distances.

Stage lifts overcome the usual limitations of their lifting height imposed by stroke length. Stage lifts operate with “double-acting“ hydraulic cylinders (return stroke by hydraulic pressure) and are equipped with a load spreading plate and a piston support plate.

Operation

A stage lift operates inverted and lifts the load via the bottom of the cylinder whilst it climbs on a pile of support bars (wood or aluminium). In principle, the load can be lifted to any height although stage lifts are still compact and versatile for low-headroom lifting applications.

The simple “3-step operation“ eliminates the need for additional holding arrangements and the repositioning or replacing of cylinders which are normally required for a higher lifting distance. A stage lift climbs up and down on its own.

Control

Depending on the power pack, selected stage lifts can be controlled individually (by hand or motor pump) or together in a synchronized arrangement with multi-flow pumps.

Features

- Yale ChroMo-Design.
- Low-cost lifting systems possible, (3-point resp. 4-point).
- Low weight (e.g. 60 kg for a 50 t unit).
- Stage lift body made from high-grade aluminium.
- Hydraulic cylinders are made from robust chromium-molybdenum steel with double bronze bearings ensure a longlife service system.
- Large-diameter tilt saddle.
- Incl. coupler halves, non-interchangeable on request.

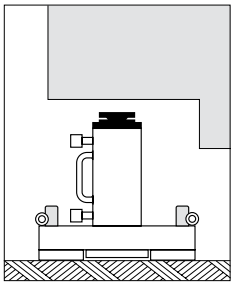

1. Stage: Initial position, stage lift rests on the ground under the load.

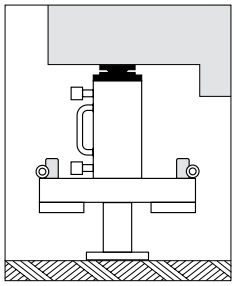

2. Stage: Step 1, load is raised.

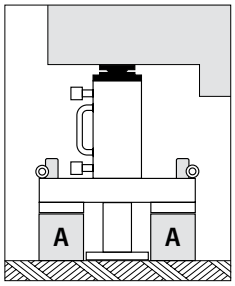

3. Stage: Two support bars type “A” are positioned in place.

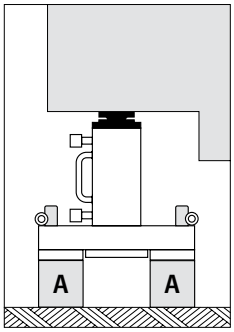

4. Stage: Piston is retracted and load rests on support bars type “A”.

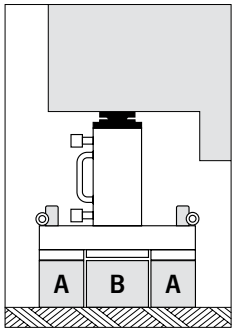

5. Stage: Broader middle bar type “B” is inserted.

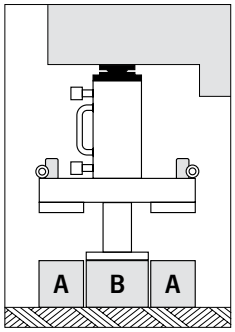

6. Stage: Step 2, load raised on broader middle bar “B”.

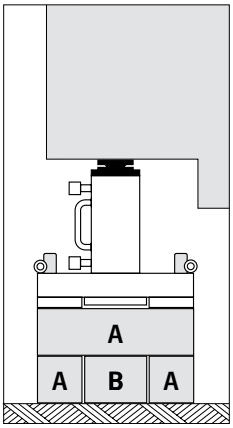

7. Stage: Two bars “A” are inserted and rotated at 90°, piston is retracted and middle bar is inserted.

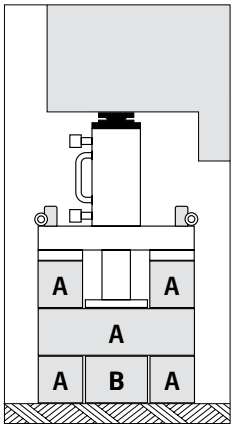

8. Stage: Load is lifted on middle bar (3rd step), two support bars type “A” are positioned at 90° and load rests on support bars “A”.

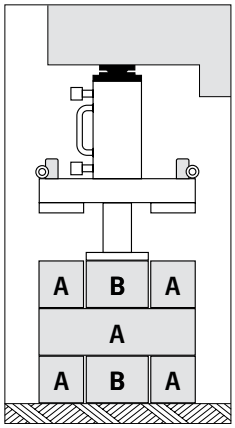

9. Stage: Piston is retracted, middle bar type “B” is inserted and lifts the 4th step on middle bar “B” and so on...

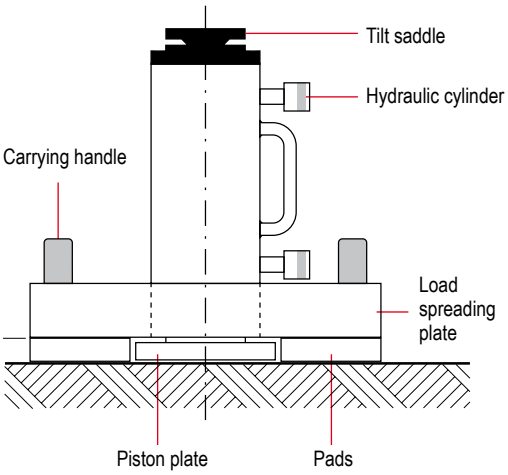

Technical data ST

Model	Art.-No.	Capacity max. t	Stroke mm	Overall height mm	Load-spreading plate Ø mm	Piston plate Ø mm	Weight approx. kg
ST-5015	N15000923	50	150	396	425 x 425	160	60
ST-10015	–	100	150	455	525 x 525	180	115

YHS
Hydraulic spreader

Capacity max. 0.5 - 1.5 t

These universal power tools can be used for all repair, maintenance and assembly work requiring precisely controlled power, e.g. aligning of containers and shells, lifting, positioning or aligning of machinery and structural components, forcing-off of shutterings and moulds. Applications are unlimited.
The spreaders can be operated with all hand pumps.

Features

- Operating pressure max. 700 bar.
- Single-acting with spring return.
- Works in all positions.
- Spreader arms of high-tensile steel.
- Incl. female coupler half CFY-1 with dust cap.

Technical data YHS

Model	Art.-No.	Capacity max. kN	Capacity max. t	Operating pressure max. bar	Oil volume max. cm³	Spread width min. mm	Spread width max. mm	Weight kg
YHS-05	N13400910	5	0.5	700	10	16	75	1.9
YHS-10 A	192098210	10	1.0	700	10	10	94	2.3
YHS-15	N13900609	15	1.5	700	70	35	220	6.9

YCC-201
Hydraulic chain cutter

This hydraulic chain cutter has been designed for cutting high-tensile, grade 10 chains up to a material diameter of 13 mm. The open design allows easy positioning of the chain. The unit can be operated using the standard hand or motor pumps.

Recommended pump:
Electric power pack PY-04/2/5/2M

Features

- Cutting performance:
  max. material dimension grade 10 Ø: 13 mm
  max. cutting force: 23 t
  Weight: 37.4 kg
- Solid, stable and rigid body
- Built-in standard hydraulic cylinder, single-acting with spring return
- Both through-hardened cutting blades are identical in construction, can be re-sharpened and are easy to remove.
- Protection flap with acrylic glass pane allows safe monitoring of cutting process
- Opening in base plate allows chips and splinters to fall down through the body for removal
- Special chain support device for cutting larger chains

RPYS-1215
Hydraulic test rig for hoisting equipment

Capacity max. 12 t

For testing pul-lifts, lever hoists, chain blocks, wire rope pullers as well as other lifting equipment after repair or inspection.

Testing of hoisting equipment

The lifting unit is placed between upper and lower shackle, the chain is tensioned against the oil cushion of the partly advanced piston of the hydraulic cylinder.
The applied force can be read at the pressure gauge.

Testing of the hoist brake

For a functional test of the hoist brake the hand pump may be used to apply a counter pressure and thus increase the pulling force after a general test.

Frequent use

For frequent testing, the hand pump may be replaced by a low-cost air hydraulic (model PAY-6) or electric pump (model PY-04/2/5/2 M).

Pressure gauge

To read pulling forces more easily, the test rig is equipped with two high-quality pressure gauges.

Quick couplers allow an easy replacement of pressure gauges.

Pressure gauge 1 for small test items: GGY-1005, display: 0 - 160 bar, Ø 100 mm, Kl. 1.0 %

Pressure gauge 2 for big test items: GGY-1003, display: 0 - 400 bar, Ø 100 mm, Kl. 1.0 %

Permanent load lifting magnet TPM 0,3 for a test in the test rig RPYS-1215 complete with the test plate AYP-1215-S

AYP-1215-S
Test plate for permanent load lifting magnets

Test load max. 12 t

For testing of permanent load lifting magnets according to DIN EN 13155.

The plate is placed into the 12 ton test rig RPYS-1215 (or other versions of this test rig) and connected to the frame with a bolt.

The test plate with a standardised surface according to DIN EN 13155 kann be adjusted horizontally to align it steadily.

Dimensions: 800 x 490 x 60 mm

Features

- Fully welded, low-strain press-frame.
- Upper and lower suspension hook by means of shackles, incl. two 5 tons pull-rings for smaller test units.
- Lateral pump table.
- Infinite adjustment of the pulling force.
- Chart for easy determination of test force.
- Removable lower suspension e.g. for testing of plate clamps.
- Base pre-drilled for mounting.
- High-quality hydraulic components.
- YCS-21/150 hollow cylinder made from chromium-molybdenum steel, heat-treated and hard chromium-plated. Long cylinder stroke of 150 mm with bronze bearings.
- Two-stage quick action hand pump HPS-2/0,7A.
- High-strength threaded bar M27.
- Fine-adjustment pressure valve.

Technical data RPYS

Model	Art.-No.
RPYS-1215	N13700895

Dimensions RPYS

Model	RPYS-1215
A, mm	2580 - 2730
B, mm	2160
C, mm	1840
D, mm	500
E, mm	630
F, mm	760
G[1], mm	1030 - 1425
H, mm	750
J, mm	150
Weight, kg	225

[1] 700 mm with 5 t pull-rings

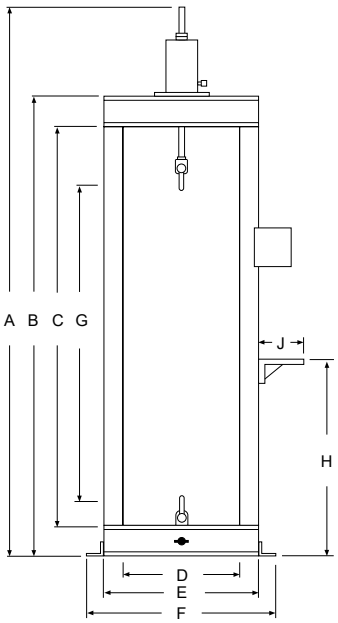

INFO

The test rigs are delivered complete and ready to use.

RPYS-1535 Hydraulic test rig for steel winches

Capacity max. 15 t

For the testing of steel winches or similar lifting devices we offer a specific test rig.

Features

- Max. capacity 15 t.
- With hydraulic cylinder YS-15/350.
- Stroke: 350 mm.

Scope of delivery

- Incl. two-stage hand pump HPS-2/2 A.
- Fine-adjustment pressure valve 0 - 700 bar.
- Hydraulic hose 2 m, HHC-20.
- Pressure gauge: GGY-1004, display: 0 - 700 bar, Ø 100 mm, Kl. 1.0 %.

RPY-10 … (10 t press)
RPY-23 … (23 t press)

RPY and RPES Universal workshop presses

Capacity 10 - 200 t

For all repair and assembly jobs.

According to European standards, all Yale workshop presses can be used without any additional protection devices as the piston speed is below 10 mm/s.
For special applications additional safety equipment (e.g. protection grid or two-hand-safety-control) can be offered on request.

Applications

- Pressing and removing of bolts, shafts, bearings.
- Straightening of beams, profiles, axles, shafts.
- Forming, bending, crimping.
- General load tests and tests of weld specimens.
- Stamping, cutting, punching.
- Pre-adjustment of tools.

Equipment of all presses

Features

- All workshop presses are ready to use, including hydraulic oil, oil level gauge.
- High pressure-hydraulic hoses.
- Glycerine-damped pressure gauges.
- Fixing holes in base profiles, adjusting device for press table and head, swivelling pump console, conversion chart: Pressure-force etc.

Description of the hydraulic cylinders

Features

- Cylinders made from chromium-molybdenum steel, heat-treated and with metric mounting threads in the piston.
- Double bronze bearing of the hard chromium-plated piston.
- Piston return through spring or hydraulically.
- Mounting thread in the piston.
- Available piston strokes from 150 up to 500 mm.

Description of the press-frames

Features

- Robust, torsion-resistant construction.
- Solid, precision-welded press-frames.
- Open construction, easily accessible from all sides.
- 50 and 100 tons workshop presses with adjustable press table and press head (frames for adjustments are part of the delivery package).
- 200 t press with adjustable table and fix welded press head.
- Four locking bolts ensure a precisely aligned press head and press table and increase the stability of the frame (50 and 100 t).
- 50, 100 and 200 t presses with pivoting pump table with peripheral passage for straigthening of exceptionaly long parts.
- Modular system: Large variety of combinations of hydraulic cylinders and pumps possible.
- Drive either by hand or electric hydraulic pumps.

RPY-50 … (50 t press)
RPY-100 … (100 t press)

INFO

The press head of the 200 t model is fix welded to the press-frame.

Workshop presses are delivered ready to use.

Description of the hand pumps

Features

- All hand pumps with two-stage displacement.
- Glycerine-damped pressure gauge, Ø 63 mm, class 1.6 %.
- Hydraulic hose, L = 2.0 m with male coupler half.

Description of the hydraulic power packs

Features

- Longlife radial piston pumps, from 50 t with two-stage displacement.
- Pressure pre-set valve on request (standard equipment for the solenoid valves).
- Glycerine-damped pressure gauge, Ø 100 mm, class 1.0 %.
- Control by manual directional valve (with motor start-stop remote control) or solenoid valve with pendant remote control box.

RPES 10 … (10 t press)
RPES 30 … (30 t press)

Technical data RPY and RPES

Model	Art.-No.	Frame design	Capacity t	Cylinder model	Cylinder stroke mm	Piston return	Type of pump	Valve control	Pump model
RPY-1015 M-2	N13700896	bench press	10	YS-10/150	150	spring	manual	manual	HPS-2/0,7 A
RPY-1025 EM-PYE 07	N13700021	bench press	10	YS-10/250	250	spring	electric	manual	PYE-07/3/10/3M-RPY
RPY-2316 M-2	N13700898	bench press	23	YS-23/160	160	spring	manual	manual	HPS-2/0,7 A
RPY-2325 M-2	N13700900	bench press	23	YS-23/250	250	spring	manual	manual	HPS-2/2 A
RPY-2325 EM-PYE 07	N13700017	bench press	23	YS-23/250	250	spring	electric	manual	PYE-07/3/10/3M-RPY
RPES-1015 M-2	N13700004	floor press	10	YS-10/150	150	spring	manual	manual	HPS-2/0,7 A
RPES-1025 EM-PYE 07	N13700022	floor press	10	YS-10/250	250	spring	electric	manual	PYE-07/3/10/3M-RPY
RPES-2316 M-2	N13700006	floor press	23	YS-23/160	160	spring	manual	manual	HPS-2/0,7 A
RPES-2325 M-2	N13700900	floor press	23	YS-23/250	250	spring	manual	manual	HPS-2/2 A
RPES-2325 EM-PYE 07	N13700020	floor press	23	YS-23/250	250	spring	electric	manual	PYE-07/3/10/3M-RPY
RPY-5015 EM	N13701005	floor press	50	YH-50/150	150	hydraulic	electric	manual	PY-04/2/5/4M
RPY-5035 EM	N13700912	floor press	50	YH-50/350	350	hydraulic	electric	manual	PY-04/2/5/4M
RPY-5035 EE	N13700913	floor press	50	YH-50/350	350	hydraulic	electric	solenoid	PYS-07/3/10/4 E
RPY-5050 EE	N13701006	floor press	50	YH-50/500	500	hydraulic	electric	solenoid	PYS-07/3/10/4 E
RPY-10035 EM	N13700914	floor press	100	YH-100/350	350	hydraulic	electric	manual	PY-07/3/10/4 M-RPY
RPY-10035 EE	N13700915	floor press	100	YH-100/350	350	hydraulic	electric	solenoid	PY-07/3/10/4 E
RPY-10050 EM	N13700916	floor press	100	YH-100/500	500	hydraulic	electric	manual	PY-07/3/10/4 M-RPY
RPY-10050 EE	N13701008	floor press	100	YH-100/500	500	hydraulic	electric	solenoid	PY-07/3/10/4 E
RPY-20035 EM	N13700917	floor press	200	YH-200/350	350	hydraulic	electric	manual	PY-11/3/20/4 M-RPY
RPY-20035 EE	N13700918	floor press	200	YH-200/350	350	hydraulic	electric	solenoid	PY-11/3/20/4 E
RPY-20050 EM	N13700919	floor press	200	YH-200/500	500	hydraulic	electric	manual	PY-11/3/20/4 M-RPY
RPY-20050 EE	N13701017	floor press	200	YH-200/500	500	hydraulic	electric	solenoid	PY-11/3/20/4 E

Code explanation

Valve control : M = manual valve, E = solenoid valve with pendant remote control
Pump : M = hand pump, E = electric pump
Piston stroke : 15 = 150 mm, 16 = 160 mm, 25 = 250 mm, 35 = 350 mm, 50 = 500 mm
Capacity max. : 10 = 10 t, 23 = 23 t, 50 = 50 t, 100 = 100 t, 200 = 200 t
Model

Dimensions RPY and RPES (frame only)

Model	RPY-10	RPY-23	RPES-10	RPES-23	RPY-50	RPY-100	RPY-200
A min., mm	–	–	50	50	280	270	320
A max., mm	440	440	930	930	1120	830	1000
B, mm	380	380	700	700	820	1000	1000
C, mm	510	510	650	650	1020	1300	1400
D, mm	–	–	500	500	1200	1480	1580
E, mm	180	180	–	–	920	860	1040
F, mm	–	–	150	150	140	140	170
G, mm	–	–	240	240	255	335	450
H, mm	840	840	1695	1695	2000	2000	2430
I, mm	300	300	245	245	315	395	550
K, mm	–	–	–	–	1000	1000	1000
L, mm	–	–	–	–	383	333	400
Weight approx., kg	77	77	94	94	450	950	2380

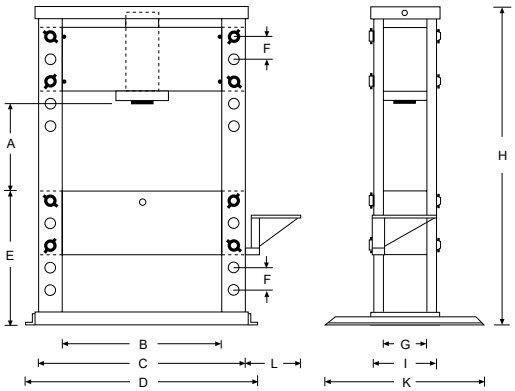

RPY-50, 100 and 200

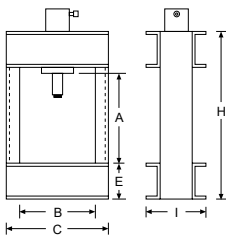

RPY-10 up to 23

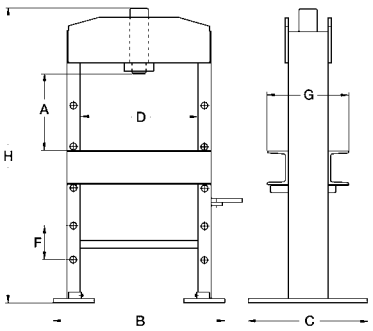

RPES-10 up to 30

Selection chart for single-acting systems

Which hand pump is suitable for which hydraulic cylinder?

The appropriate hand pump model basically depends on the oil volume of the selected hydraulic cylinders.
To assist you in your choice please find proposals for the most common cylinders in our range.

How to find the right hand pump in the following charts?

The chosen hydraulic cylinder can be found in the first column.

Several hydraulic cylinders connected to one hand pump:

In those cases where several hydraulic cylinders are connected to one hand pump, the oil volume must be multiplied by the number of connected cylinders. The reservoir of the hand pump must be at least equal to the required total oil volume (plus reserve). If the reserve is very small it may be necessary to top up the reservoir after the air-bleeding procedure, depending on the length of the hydraulic hose. During further operation there is no need to consider the volume of the connected hydraulic hose (regardless of the length) because hoses always remain filled.

Double-acting systems:

Please note that while advancing a double-acting cylinder, about 1/3 of the cylinder's oil volume flows back to the reservoir (coming from the piston chamber). After the air-bleeding procedure both oil chambers will remain filled.

INFO

Please contact us for any questions regarding the configuration of complex systems according to your specific requirement.

Selection chart for single-acting systems

Model	Oil volume cm³	Hand pumps single-stage HPS-1/0,7A 700 cm³	Hand pumps two-stage HPS-2/0,3A 300 cm³	Hand pumps two-stage HPS-2/0,7A 700 cm³	Hand pumps two-stage HPS-2/1,3A 1300 cm³	Hand pumps two-stage HPS-2/2A 2000 cm³	Hand pumps two-stage HPS-2/4A 4000 cm³	Hand pumps two-stage HPS-2/6,5A 6500 cm³
YS-5/15	11	+++	+++	–	–	–	–	–
YS-5/25	18	+++	+++	+++	–	–	–	–
YS-5/75	53	+++	+++	+++	–	–	–	–
YS-5/127	90	+++	+++	+++	–	–	–	–
YS-5/180	127	+++	+++	+++	–	–	–	–
YS-10/25	37	+++	++	+++	–	–	–	–
YS-10/50	73	+++	++	+++	–	–	–	–
YS-10/100	146	+++	++	+++	–	–	–	–
YS-10/150	218	+++	–	+++	–	–	–	–
YS-10/200	291	+++	–	+++	–	–	–	–
YS-10/250	363	+++	–	+++	++	–	–	–
YS-10/300	463	++	–	+++	++	–	–	–
YS-15/25	53	+++	++	+++	–	–	–	–
YS-15/50	106	+++	++	+++	–	–	–	–
YS-15/100	213	+++	–	+++	++	–	–	–
YS-15/150	319	+++	–	+++	++	–	–	–
YS-15/200	425	++	–	+++	++	++	–	–
YS-15/250	531	++	–	+++	+++	++	–	–
YS-15/300	637	–	–	–	+++	+++	–	–
YS-15/350	744	–	–	–	+++	+++	–	–
YS-23/25	83	+++	–	+++	–	–	–	–
YS-23/50	166	+++	–	+++	–	–	–	–
YS-23/100	332	+++	–	+++	++	++	–	–
YS-23/160	531	++	–	+++	+++	++	–	–
YS-23/210	697	–	–	–	+++	++	–	–
YS-23/250	830	–	–	–	+++	++	–	–
YS-23/300	996	–	–	–	+++	++	–	–
YS-23/345	1145	–	–	–	+++	+++	–	–
YS-30/125	552	++	–	+++	+++	+++	–	–
YS-30/200	884	–	–	–	+++	+++	–	–
YS-50/50	355	++	–	+++	+++	+++	–	–
YS-50/100	709	–	–	–	+++	+++	–	–
YS-50/160	1135	–	–	–	+++	+++	–	–
YS-50/320	2269	–	–	–	–	–	+++	++
YS-70/150	1478	–	–	–	–	+++	+++	++
YS-70/330	3252	–	–	–	–	–	++	+++
YS-100/100	1432	–	–	–	–	+++	++	++
YS-100/200	2863	–	–	–	–	–	+++	++
YLS-10/35	51	+++	+++	+++	–	–	–	–
YLS-20/45	128	+++	++	+++	–	–	–	–
YLS-30/60	266	++	++	+++	–	–	–	–
YLS-50/60	426	++	–	+++	++	++	–	–
YLS-100/55	788	–	–	–	+++	+++	–	–
YFS-10/11	16	+++	+++	+++	–	–	–	–
YFS-20/15	31	+++	+++	+++	–	–	–	–
YFS-30/15	66	+++	+++	+++	–	–	–	–
YFS-50/15	107	+++	++	+++	–	–	–	–
YFS-100/15	215	+++	–	+++	–	–	–	–
YCS-12/40	71	+++	+++	+++	–	–	–	–
YCS-12/75	132	+++	+++	+++	–	–	–	–
YCS-21/50	153	+++	++	+++	–	++	–	–
YCS-21/150	458	+++	–	+++	++	++	–	–
YCS-33/60	287	+++	–	+++	–	–	–	–
YCS-33/150	716	–	–	–	+++	+++	–	–
YCS-57/70	562	++	–	+++	+++	+++	–	–
YCS-62/150	1330	–	–	–	–	+++	+++	–
YCS-93/75	990	–	–	–	+++	+++	–	–

+++ recommended hand pump
++ these combinations can also be used, but the oil volume of the hand pump is quite small
– these combinations should not be chosen, because the oil volumes of the hand pumps are too small to fill the selected cylinder (too large and bulky, respectively

Selection chart for double-acting systems

Model	Oil volume cm³	Hand pumps two-stage HPH-2/0,7A 700 cm³	Hand pumps two-stage HPH-2/2A 2000 cm³	Hand pumps two-stage HPH-2/4A 4000 cm³	Hand pumps two-stage HPH-2/6,5A 6500 cm³	Hand pumps two-stage HPH-2/10A 10000 cm³
YCH-33/150	716	++	+++	–	–	–
YCH-33/250	1200	–	+++	++	–	–
YCH-62/250	2220	–	+++	+++	–	–
YCH-93/250	3320	–	–	+++	++	–
YCH-100/40	578	+++	+++	–	–	–
YCH-140/200	4080	–	–	+++	++	–
YH-5/30	21	+++	–	–	–	–
YH-5/80	57	+++	–	–	–	–
YH-5/150	106	+++	–	–	–	–
YH-10/30	44	+++	–	–	–	–
YH-10/80	116	+++	–	–	–	–
YH-10/150	218	+++	–	–	–	–
YH-10/250	363	+++	++	–	–	–
YH-20/50	142	+++	++	–	–	–
YH-20/150	424	+++	+++	–	–	–
YH-20/250	707	++	+++	–	–	–
YH-30/200	884	–	+++	–	–	–
YH-30/350	1547	–	+++	–	–	–
YH-50/150	1064	–	+++	–	–	–
YH-50/350	2481	–	++	+++	–	–
YH-50/500	3544	–	–	+++	++	–
YH-70/150	1478	–	+++	–	–	–
YH-70/350	3449	–	–	+++	++	–
YH-100/50	716	+++	+++	–	–	–
YH-100/150	2148	–	+++	+++	–	–
YH-100/350	5010	–	–	++	+++	–
YH-100/500	7157	–	–	–	++	+++
YH-200/150	4253	–	–	+++	+++	–
YH-200/350	9924	–	–	–	++	+++
YH-200/500	14177	–	–	–	–	+++

+++ recommended hand pump
++ these combinations can also be used, but the oil volume of the hand pump is quite small
– these combinations should not be chosen, because the oil volumes of the hand pumps are too small to fill the selected cylinder (too large and bulky, respectively

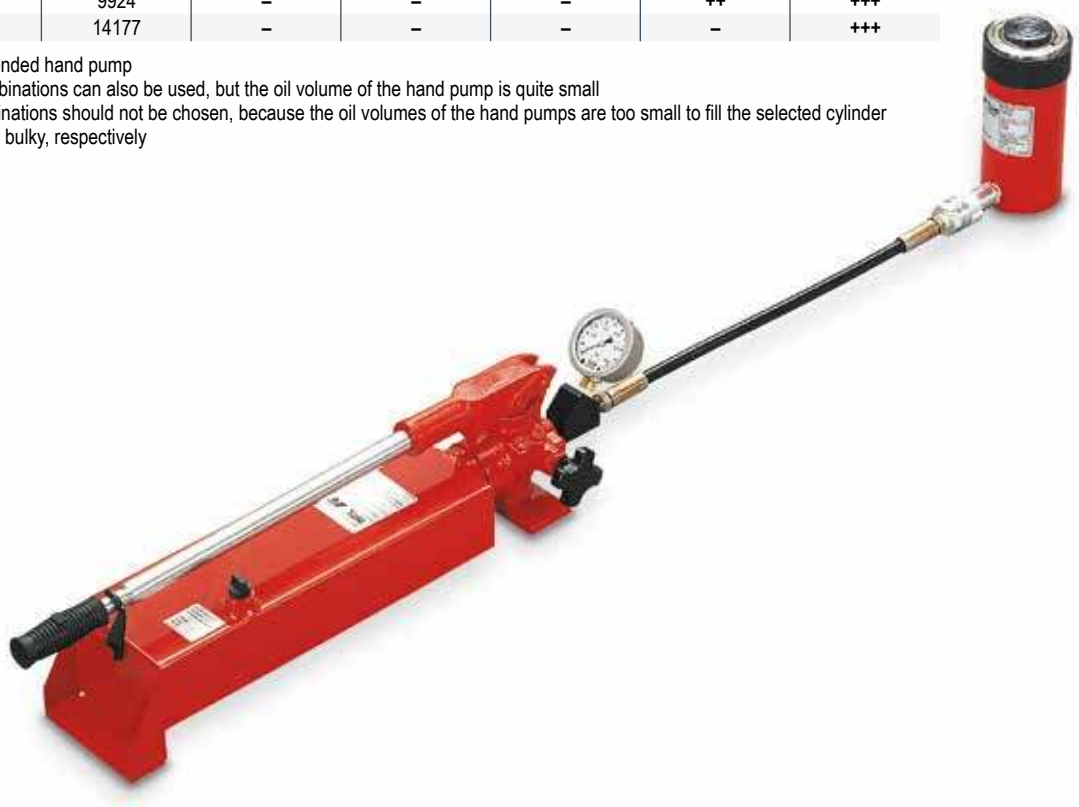

Pump and cylinder speed chart

Hand pumps

For hand pumps the figures given correspond to the number of pump strokes to achieve a piston travel of 10 mm.

Power pumps

For power pumps the piston travel speed is indicated in mm/s.

Double-acting hydraulic cylinders

Please note that double-acting cylinders (YCH, YH and YEHB) always retract faster than they advance, due to the different oil chamber volumes.

Reservoir volumes

The reservoir volumes of hand pumps shall at least correspond to the oil volume which is necessary to advance all connected hydraulic cylinders (plus reserve).
Motor pump reservoirs should have at least twice the total required oil quantity (better 3 or 4 times) depending on the operation conditions. For continuous operation choose extra large reservoirs to avoid excessive heating-up of the hydraulic oil.

Hand pumps

Cylinder size	Number of pump strokes for 10 mm strokes	
t	**HPS-2/0,7 A up to HPS-2/10 A ND**	**HPS-1/0,7 A up to HPS-2/10 A HD**
5	1	4
10	1	7
15	2	11
20	2	14
21	2	15
23	3	17
30	3	22
33	4	24
50	5	35
57	6	40
62	7	44
70	8	49
85	9	61
93	10	66
100	11	72
140	15	100
200	22	142
220	24	157
340	32	205
430	47	308
560	62	402
670	74	481
880	97	628

ND = Low-pressure stage (unloaded stroke)
HD = High-pressure stage (loaded stroke)

Power pumps

Cylinder size	Piston travel speed in mm/s												
	PY-04	PY-04	PY-07	PY-07	PY-11	PY-11	PY-22	PY-22	PYE-40	PYE-55	PYE-75	PYE-110	PYE-180
t	ND	HD	ND	HD	ND	HD	ND	HD	HD	HD	HD	HD	HD
5	99.9	5.4	155.9	14.2	–	–	–	–	63.8	–	–	–	–
10	48.7	2.6	75.9	6.9	103.5	11.5	–	–	31.1	46	69	–	–
15	33.3	1.8	51.9	4.7	70.8	7.9	–	–	21.2	31.5	47.2	62.9	–
20	25.0	1.4	39.0	3.5	53.2	5.9	106.9	12.4	15.9	23.6	35.4	47.3	75.0
21	23.2	1.3	36.1	3.3	49.3	5.5	99.1	11.5	14.8	21.9	32.8	43.8	69.5
23	21.3	1.2	33.2	3.0	45.3	5.0	91.1	10.6	13.6	20.1	30.2	40.3	63.9
30	16.0	0.9	24.9	2.3	34.0	3.8	68.4	7.9	10.2	15.1	22.7	30.2	48.0
33	14.8	0.8	23.1	2.1	31.5	3.5	63.4	7.4	9.5	14	21	28.0	44.5
50	10.0	0.5	15.6	1.4	21.2	2.4	42.6	4.9	6.4	9.4	14.1	18.8	29.9
57	8.8	0.5	13.7	1.2	18.7	2.1	37.7	4.4	5.6	8.3	12.5	16.7	26.4
62	8.0	0.4	12.4	1.1	17.0	1.9	34.1	4.0	5.1	7.5	11.3	15.1	24.0
70	7.2	0.4	11.2	1.0	15.3	1.7	30.7	3.6	4.6	6.8	10.2	13.6	21.5
85	5.8	0.3	9.0	0.8	12.3	1.4	24.7	2.9	3.7	5.4	8.2	10.9	17.3
93	5.4	0.3	8.4	0.8	11.4	1.3	22.9	2.7	3.4	5.1	7.6	10.1	16.1
100	4.9	0.3	7.7	0.7	10.5	1.2	21.1	2.5	3.2	4.7	7.0	9.3	14.8
140	3.5	0.2	5.0	0.5	7.1	0.8	14.9	1.7	2.2	3.3	5.0	6.6	10.0
200	2.5	0.1	3.2	0.4	5.3	0.6	10.7	1.2	1.6	2.4	3.5	4.7	7.5
220	2.2	0.1	3.5	0.3	4.5	0.5	9.6	1.1	1.4	2.1	3.2	4.2	6.4
310	–	–	2.3	0.2	3.7	0.4	6.9	0.8	1.0	1.5	2.3	3.0	4.6
410	–	–	1.8	0.2	2.4	0.3	5.2	0.6	0.8	1.2	1.8	2.3	3.5
520	–	–	1.4	0.1	1.9	0.2	4.1	0.5	0.6	0.9	1.4	1.8	2.7
610	–	–	1.1	0.1	1.7	0.2	3.5	0.4	0.5	0.8	1.2	1.6	2.3
830	–	–	0.9	0.1	1.2	0.1	2.6	0.3	0.4	0.6	0.9	1.1	1.7

ND = Low-pressure stage (unloaded stroke)
HD = High-pressure stage (loaded stroke)
– = combination not recommended or not possible

HWH 2K, 3 t

HWH KS, 5 t

HWH 2K PROLINE
Hydraulic car jack
- with 2 pistons

HWH 2KS PROLINE
- with 2 pistons and spindle

HWH KS PROLINE
- with piston and spindle

Capacity 2 - 30 t

For lifting vehicles on one side (the lifted load must be secured mechanically with supporting stands, for example).

Features

- Versions with hydraulic piston and mechanical spindle drive resp. with two hydraulic pistons.
- With carrying bracket from load capacity 20 t.
- Extremely low design with model HWH 2K/D (incl. one pressure section for lift extension).
- With integrated pressure control valve for a longer service life of the jack.
- Integrated seat valve for controlled lowering of the load.

HWH 2K NB, 10 t

HWH 2KS, 10 t

HWH KS, 20 t

Technical data HWH 2K PROLINE and HWH 2KS PROLINE

Model	Art.-No.	Capacity t	Weight kg
HWH 2K 3,0	32301016	3	4.87
HWH 2K 5,0	32304001	5	6.3
HWH 2KS 10,0	32304002	10	8.8
HWH 2KS 12,0	32307014	12	11.0
HWH 2K NB 10,0[1]	32306034	10	7.9
HWH 2K/D 10,0[2]	32304003	10	6.5

[1]horizontal pump unit [2]with replaceable pressure section (height 45 mm)

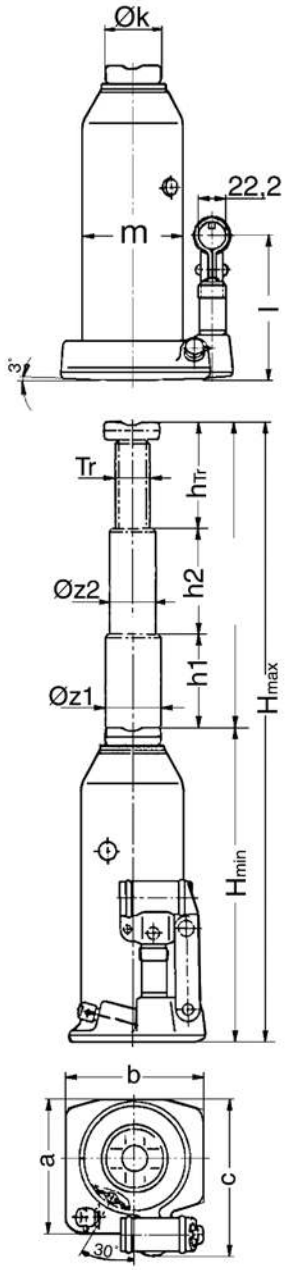

Dimensions HWH 2K PROLINE and HWH 2KS PROLINE

Model	HWH 2K 3,0	HWH 2K 5,0	HWH 2KS 10,0	HWH 2KS 12,0	HWH 2K NB 10,0[1]	HWH 2K/D 10,0[2]
a, mm	107	98	129	185	Ø	140
b, mm	90	120	164	185	127	164
c, mm	124	134	160	176	197	160
H min., mm	185	215	200	230	175	120
H max., mm	400	520	530	570	385	230
h1, mm	110	145	130	130	104	54
h2, mm	105	160	132	125	106	56
hTr, mm	–	–	68	85	–	–
Ø k, mm	60 x 35	43	40	48	43	38
l, mm	115	134	116	53	136	112
m, mm	80	90	116	133	116	116
Tr, mm	–	–	32 x 5	40 x 6	–	–
Ø z1, mm	32	39	52.58	61.5	52.5	52.5
Ø z2, mm	23	29	39.5	48.5	39.5	39.5

[1]horizontal pump unit [2]with replaceable pressure section (height 45 mm)

Technical data HWH KS PROLINE with piston and spindle

Model	Art.-No.	Capacity t	Weight kg
HWH KS 2,0	32300002	2	2.9
HWH KS 3,5	32302004	3.5	2.9
HWH KS 5,0	32303000	5	3.9
HWH KS 8,0	32305003	8	5.7
HWH KS 10,0	32306026	10	5.7
HWH KS 12,0	32307006	12	7.1
HWH KS 15,0	32308002	15	8.3
HWH KS 20,0	32309009	20	10.7
HWH KS 25,0	32310007	25	13.1
HWH KS 30,0	32311003	30	14.5

INFO

HWH KS PROLINE with capacity of 50 t and 100 t available on request.

Dimensions HWH KS PROLINE with piston and spindle

Model	HWH KS 2,0	HWH KS 3,5	HWH KS 5,0	HWH KS 8,0	HWH KS 10,0	HWH KS 12,0	HWH KS 15,0	HWH KS 20,0	HWH KS 25,0	HWH KS 30,0
a, mm	34	34	38	105	105	116	121	110	122	122
b, mm	105	105	110	122	122	120	130	164	185	185
c, mm	103	103	110	124	124	134	139.5	160	176	176
H min., mm	170	170	212	220	220	230	230	240	240	240
H max., mm	377	377	462	480	480	497	495	505	515	482
h1, mm	115	115	150	150	150	157	155	155	157	142
hTr, mm	92	92	100	110	110	110	110	110	118	100
Ø k, mm	28	28	40	48	48	48	60	60	65	65
l, mm	116	113	113	116	116	116	116	116	120	116
m, mm	58	58	65	80	80	90	95	116	133	133
Tr, mm	20 x 4	20 x 4	24 x 5	32 x 5	32 x 5	35 x 6	40 x 6	45 x 6	48 x 6.35	48 x 6.35
Ø z1, mm	24.9	24.9	29.9	39.5	39.5	43.5	48.5	54.5	59.5	61.5

JH
Universal jacks

Capacity 2 - 50 t

Universal jacks supply high forces for general operations like lifting, pushing, moving, supporting of all kind of loads.

Features

- Robust, long life design.
- Pressure relief valve
- Precise controlled lowering.
- Additional screw extension of the piston (up to 20 t).
- Grooved saddle.
- Large base plates for increased stability.
- JH-50-2 with two-stage pump.
- Incl. operating lever.

JH-50-2

Technical data JH

Model	Art.-No.	Capacity t	Stroke mm	Additional screw extension mm	Closed height mm	Base plate mm	Pump	Weight kg
JH-2 B	N13300003	2	115	50	181	90 x 95	single-stage	2.7
JH-4 B	N13300004	4	126	60	205	115 x 110	single-stage	3.7
JH-6 B	N13300005	6	130	75	219	115 x 110	single-stage	4.7
JH-8 B	N13300006	8	152	70	225	120 x 120	single-stage	5.7
JH-12 B	N13300007	12	153	80	240	140 x 130	single-stage	8.0
JH-20 B	N13300008	20	153	80	240	160 x 155	single-stage	11.0
JH-30	N13300408	30	180	–	280	210 x 180	single-stage	22.0
JH-50-2	N13300893	50	178	–	305	255 x 190	two-stage	53.0

MH
Machine jack

Capacity 5 - 25 t

For lifting heavy machinery and other loads.

Features

- Can be used in every position.
- Lifting by means of a hand pump.
- Lowering by means of a precision lowering valve.
- With carrying handle for MH 50 and MH 100.
- With carriage for MH 250.
- Pressure control valve for a longer service life of the jack.
- Integrated lifting limitation.
- Low application height of the claw.
- Slewing claw (MH 50 and MH 100)
- Large base plate for a high level of stability.
- Stable construction with hard-chromium plated piston rod.

Technical data MH

Model	Art.-No.	Capacity t	Stroke mm	Application height min. with claw mm	Application height min. with head mm	Pump lever force with full load daN	Weight kg
MH 50	40014771	5	205	25	≤ 368	38	25
MH 100	40014772	10	230	30	≤ 420	40	35
MH 250	40014773	25	215	58	≤ 505	40	109

Dimensions MH

Model	MH 50	MH 100	MH 250
A, mm	393	449	–
B, mm	320	325	459
C, mm	213	205	420
D, mm	115	120	220
E, mm	53	55	90
G, mm	25	30	58
H, mm	368	420	505
H1, mm	573	650	720
H2, mm	205	230	215
J, mm	77	74,5	142,5
K, mm	93	108	175
L, mm	520	520	920/840
M, mm	740	745	1305/1225
N, mm	140	170	210/283
Ø Z, mm	76	91	155

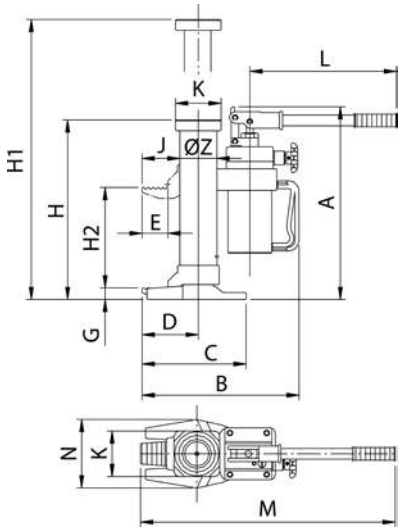

Conveyor bestseller: 2200 series

The 2200 series includes flat and incline conveyors with fabric belts, conveyors with plastic module chains, the precision move conveyors designed for precise timing, and gravity roller conveyors. Depending on the version, they are designed for transporting small to medium-sized parts with a total belt load of up to 68 kg.

The 2200 series conveyors feature a robust one-piece aluminum frame construction with universal T-track for easy attachment of accessories. With their slim design, the heavy-duty, low-maintenance conveyors are ideal for integration into machines and systems. They are designed for a wide range of applications, depending on the design for transfers accumulating operation, precise part guidance, incline/incline conveyance, exact positioning as well as automated and manual assembly.

- Transport of small to medium-sized parts
- Transfers accumulating operation and precise parts guidance
- Custom design production
- Improves efficiency, reduces downtime, increases precision
- V-ledge guide ensures that the belt runs exactly straight
- Permanently lubricated bearings
- Rack and pinion system for easy tensioning of the belt

CONTACT

Dorner GmbH, Karl-Heinz-Beckurts-Straße 4, 52428 Jülich
T +49 2461 93767-0, info.europe@dorner.com

DORNER
DORNER
DORNER

FlexMove conveyors

FlexMove conveyor systems and FlexMove individual components made of aluminum and stainless steel are ideally suited for highly flexible and individual designs.

FlexMove conveyors are designed for complex routes such as horizontal and vertical conveying with and without curves. The slat chain conveyors, also known under product names such as plastic chain conveyors and link belt conveyors, are suitable for any conveyor application in the transport of unit loads. They consist of a modular system with individual components and profiles made of aluminum or stainless steel and a flexible, low-friction plastic chain. FlexMove is available as a complete conveyor system from the modular system for quick and easy installation or as individual components for self-assembly.

FlexMove conveyors offer a variety of options such as flexible chains with cleats, rollers, friction linings, steel plates, anti-static and fabric belts. Additional components and accessories can be attached to the T-slot frame.

- Compact design for maximum use of space while reducing noise and maintenance requirements
- Vertical and horizontal conveyance possible
- Selection of flat top chains for various areas of application
- Speeds up to 50 m/min
- Maximum product loads from 150 to 300 kg
- Suitable for narrow spaces and height differences
- Curves, inclines, declines
- Buffering and accumulation

Stainless steel conveyors

Used and tested by well-known pharmaceutical, food and chemical customers, a complete range of stainless steel conveyors for hygienic areas can be offered.

These include belt conveyor belts in flat, ascending or kinked form as well as flat conveyor belts with plastic modular belt or steel belt, also in curved form, with a variety of equipment options and a comprehensive range of accessories.

Stainless steel conveyors impress with their high level of hygiene. They are ideally suited for mechanical cleaning of all product surfaces as well as quick disassembly for manual cleaning. Most of the conveyors are equipped with patented CleanTec hygiene technology.
The program of the GES series includes: Belt conveyors in flat, ascending or Z-shape, flat conveyors with plastic modular belt, as well as flat conveyors with steel belt, also in curved form.

- High hygiene properties
- Patented CleanTec hygiene technology
- Various side guide options
- Belt tensioning and tracking system
- Ideal for corrosion resistant applications
- Bridging height differences
- Conveyance of bulk and piece goods
- Curves, inclines, declines
- Buffering and accumulation

Aluminum and steel conveyors

The GAL/GF series offers modern conveyor belt solutions with an optimized design for easy integration into existing production processes and systems.

High quality in a short production time. Aluminum conveyors are custom-made between 24 hours and 14 days. The program of the GAL series includes: Belt conveyors in flat, ascending or Z-shape with patented TorsioDur frames, which guarantee very high torsional rigidity, as well as plastic modular chain belt conveyors in flat and/or curved shapes.

The robust steel conveyors of the GF series consist of a quality steel profile with an impact-resistant two-component coating and are also suitable for higher overall belt loads. The 80 mm high frame has holes for attaching accessories and can therefore be flexibly adapted to a wide variety of applications. The program of the GF series includes: Flat and rising conveyors as well as flat conveyors with steel belt.

- Streamlined design for easy integration into existing production processes and systems
- Customized conveyor belts
- TorsioDur, our torsion-resistant aluminum frame
- Fast delivery time
- Various accessories such as straps, stand systems and side guides

Special conveying solutions

Customized conveyor systems are developed according to the needs of the customers, for optimal efficiency and productivity.

The use of conveyor solutions that are optimally geared to the very specific work processes of your company is of the utmost importance. The performance of your production line affects your bottom line. Thanks to the highly specialized technology of our tailor-made conveyors systems, your products are processed faster, your orders are fulfilled faster and your profits are increased.

- Special solutions according to customer requirements
- Coordinated processes for your production line
- Increase in efficiency and productivity
- Original parts guarantee best performance and durability
- Preconfigured parts kits make ordering easier, storage and assembly of parts
- 24/7 service hotline for continuous support
- Installation service

Dorner also offers a wide range of additional equipment and has a large number of spare parts in stock. There is the right type of belt for every conveying task, stands, side guides, feed hoppers and other accessories. In addition, we offer electrical equipment for specific tasks such as sensors and controls.

GAL-25
Flat Belt Conveyor

Belt width 60 - 600 mm

With its extremely small deflecting roller of only 30 mm diameter it is specially well suited for transport of small items, that have to move from one belt to the next. It is also available in a magnetic version with a belt width of up to 200 mm. In this version the frame is magnetic, not the belt. The driving and deflecting roller are also non-magnetic.
The GAL-25 has a very rigid Monobloc quality TorsioDur frame. It is available both in standard sizes and custom made for specific problem solutions. On both sides of the 25 mm high aluminium frame and along its whole length, additional accessories can be fastened by the aid of sliding blocks with an M-6 thread. In any size of up to 400 mm width and 1500 mm length it can be held by a pivotable single column support with an aluminium ground plate. For larger belt widths and in longer versions the conveyor is equipped with the appropriate number of aluminium double supports. Both support systems are adjustable in height and have a vertical position lock.

Technical data GAL-25

Model	Art.-No.	Belt width mm	Belt length mm	Admissible loads kg
GAL-25-100x1500	C000001	100	1500	30
GAL-25-100x2000	C000002	100	2000	30
GAL-25-150x1000	C000003	150	1000	30
GAL-25-150x1500	C000004	150	1500	30
GAL-25-200x1000	C000005	200	1000	30
GAL-25-200x1500	C000006	200	1500	30
GAL-25-200x2000	C000007	200	2000	30
GAL-25-250x2000	C000008	250	2000	30
GAL-25-400x1000	C000009	400	1000	30
GAL-25-400x1500	C000010	400	1500	30

GF-80
Flat Belt Conveyor

Belt width 100 - 1400 mm

The flat belt conveyor GF-80 is specially well suited for high total load. In its standard configuration it can transport up to 70 kg. But it can easily be adapted to carry 150 kg or more with out any problem.
Upon request it can be produced in standardised widths of up to 600 mm and in any intermediate length up to 18000 mm within 24 hours.
The robust GF-80 is made from a high-quality steel profile covered with a two component coating. The 80 mm high frame has 9 mm big holes every 30 mm. In these additional accessories can easily be fastened. Therefore the GF-80 is quick to be adapted to various uses. You will find more information on available accessories under the column “Lot of Accessories”.
Any GF-80 with a length of 1500 mm or shorter and with a width of no more than 400 mm can be used on a single column support.
Longer or wider models should use the appropriate amount of double supports, that are shown on the pictures of this page.

Both support systems are infinitely adjustable in height and have a vertical locking system.

Technical data GF-80

Model	Art.-No.	Belt width mm	Belt length mm	Admissible loads kg
GF-80-300x1000	C000011	300	1000	70
GF-80-300x1500	C000012	300	1500	70
GF-80-300x4000	C000013	300	4000	70
GF-80-400x4000	C000014	400	4000	70
GF-80-500x10000	C000015	500	10000	70
GF-80-600x3000	C000016	600	3000	70
GF-80-800x8000	C000017	800	8000	70
GF-80-1000x1500	C000018	1000	1500	70
GF-80-1000x10000	C000019	1000	10000	70
GF-80-1200x1500	C000020	1200	1500	70

GAL-80
Flat Belt Conveyor

Belt width 200 - 1000 mm

The flat belt conveyor GAL-80 is well suited for higher loads. In its standard configuration it is designed for loads of up to 70 kg. But upon request it can be adapted to carry weights of 150 kg or even more without any difficulty.
The robust GAL-80 has an extremely rigid TorsioDur frame in monobloc quality. It is available in standard widths from 200 to 1000 mm and its length can be made to any intermediate measurement needed for specific problem solutions. Over the whole length of the 80 mm high frame, additional accessories can be fixed to sliding blocks with M-8 threads gliding in grooves along the side of the frame. The GAL-80 can therefore be adapted to various uses quite easily. You will find more information on available accessories under the column “Lot of Accessories”.
In lengths of up to 1500 mm and widths smaller than 400 mm the GAL-80 can be equipped with a single column support.

Longer and wider configurations should have the corresponding number of double supports as shown in the pictures on this page.

All support systems are infinitely adjustable in height and have a locking system in their vertical position.

Technical data GAL-80

Model	Art.-No.	Belt width mm	Belt length mm	Admissible loads kg
GAL-80-300x1500	C000021	300	1500	70
GAL-80-300x3000	C000022	300	3000	70
GAL-80-400x1000	C000023	400	1000	70
GAL-80-400x4000	C000024	400	4000	70
GAL-80-500x1000	C000025	500	1000	70
GAL-80-500x1500	C000026	500	1500	70
GAL-80-900x1000	C000027	900	1000	70
GAL-80-900x1500	C000028	900	1500	70
GAL-80-1000x2500	C000029	1000	2500	70
GAL-80-1000x4000	C000030	1000	4000	70

2200-Series
Flat Belt Conveyor

Belt width 305 - 610 mm

2200-Series low profile, high performance fabric and modular belt conveyors feature a high speed nose bar transfer option, a durable single piece frame design, universal T-slots, and a wide range of belting and guiding options. The conveyors 2200-Series are particularly suitable for transporting small to medium-sized parts, transferring accumulation operations, precise part guidance, incline/decline conveying of parts (Z-frame), positioning, automated and manual assembly.

Technical data 2200-Series

Model	Art.-No.	Belt width mm	Belt length mm	Admissible loads kg
2200-Serie-305x1500	C000031	305	1500	50
2200-Serie-305x3000	C000032	305	3000	50
2200-Serie-406x1000	C000033	406	1000	50
2200-Serie-406x4000	C000034	406	4000	50
2200-Serie-508x1000	C000035	508	1000	50
2200-Serie-508x1500	C000036	508	1500	50
2200-Serie-610x1500	C000037	610	1500	50
2200-Serie-610x2500	C000038	610	2500	50

1. General Terms and Conditions

Quotations are without engagement. An order is only deemed to be accepted, when confirmed by us in writing. Our written order acknowledgement is decisive for the scope of delivery. Any supplements, additional agreements as well as promises of representatives require our written confirmation.
The purchaser is not entitled to transfer any rights from this contract without our approval.

2. Prices and terms and conditions of payment

The prices are those valid on the day of delivery. The agreed prices are calculated on Euro basis. Unless agreed otherwise, our prices are ex works excluding packing. In the cases where we bear the costs of transportation, we only accept liability for the means of transport described in the contract. Unless agreed to the contrary, dispatch will be made at our discretion and without obligation to select the least expensive method of dispatch. Our packaging complies with the German Packaging Ordinance. Any return of packaging material must be free of charge and with freight prepaid. Payment of our invoices is to be made within 30 days after the date of the invoice with 2 % discount or within 60 days after the date of the invoice, net. If agreed periods of payment are exceeded, a compensation amounting to the common bank interests and fees for open business credits, however, at least 5 % above the base rate shall be charged, without a special reminder being required in commercial course of business and under reservation of asserting further rights. The purchaser may only set off undisputed or validly decided counterclaims.

3. Partial deliveries

Partial deliveries by us are permitted.
If partial deliveries are requested by the customer and are made against an existing order, the quantities of the partial delivery shall be deducted from the total order volume. Should the purchaser call quantities beyond the original order volume, we shall be entitled to cancel the excess quantities or to invoice them at the prices valid on the day of delivery. If possible, partial calls shall be made in identical time intervals and for identical quantities. Calls shall be made in good time within a period of 12 weeks so that faultless production and delivery are possible within the agreed delivery time, otherwise the delivery time shall be extended by a corresponding period.

4. Licences and approvals

The purchaser is obliged to obtain in good time all approvals required for performance of the contract including the approvals for monetary transactions. If the required approvals cannot be obtained within a reasonable period, we shall be entitled to withdraw from the contract by declaration to the purchaser after having granted a reasonable extension of time of at least 2 weeks.

5. Delivery time, delay in delivery

a. The delivery time results from the agreements of the contract partners, if it is to be complied with by the seller all commercial and technical questions must have been clarified between the contract partners and the purchaser must have fulfilled all his obligations. If this is not the case, the delivery time shall be reasonably extended. This does not apply, if the seller is responsible for the delay.
b. Compliance with the delivery period is based on the reservation that own deliveries are received correctly and in good time.
c. The delivery period is deemed to be complied with, if the goods delivered have left the works of the seller until it expires or with the notice of readiness for dispatch. If an acceptance test has to be carried out, the date of the acceptance test is decisive, alternatively the notice of readiness for acceptance, unless acceptance is rightfully rejected.
d. If dispatch and/or acceptance of the goods delivered are delayed for reasons the purchaser is responsible for, he shall be charged with the costs incurred owing to the delay starting one month after the notice of readiness for dispatch or acceptance.
e. If non-compliance with the delivery time is the result of Force Majeure, industrial action or other events which are outside the sphere of influence of the seller, the delivery time will be reasonably extended. The seller shall inform the purchaser as soon as possible of the beginning and end of such circumstances.
f. The purchaser may withdraw from the contract without notification of a deadline, if the total service becomes finally impossible for the seller prior to the passage of risk. Furthermore, the purchaser may withdraw from the contract, if for an order execution of a part of the delivery becomes impossible and he has a lawful interest in rejecting the partial delivery. If this is not the case, the purchaser shall pay the contract price accounted for by the partial delivery. The same shall apply in the case of disability on the part of the seller. Otherwise, section 9 applies.
g. If the impossibility or disability occurs during the delay in acceptance or the purchaser is exclusively or mainly responsible for these circumstances, he shall be obliged to render a service in return.
h. If the seller causes a delay and the purchaser sustains any loss due to the delay, he shall be entitled to claim lump-sum compensation. Compensation for delayed delivery for each full week of delay is 0.5 %, however no more than 5 % of the value of the given part of the total delivery which cannot be used on the intended date of application or as per agreement due to the delayed delivery.
If the purchaser grants an appropriate deadline to the seller who is in delay for rendering the service taking into consideration the legal exceptions and if this deadline is not met, the purchaser shall be entitled to withdraw from the contract within the framework of the statutory regulations. Any further claims from delay in delivery are exclusively determined as laid down in section 9.

6. Passage of risk

Any risk of accidental loss or accidental impairment of the goods shall pass to the purchaser as soon as the goods are made available to the purchaser or with transfer to a forwarding agent or a carrier, at the latest, however, on leaving the supplier's plant. Should dispatch be delayed as a result of circumstances for which we are not responsible, the risk shall pass to the purchaser on the day of receiving the notice of readiness for dispatch. We shall only conclude insurance policies at the explicit request of the purchaser on his account. All agreements with reference to bearing the transport costs and the costs of insurance exclusively refer to the specified costs and shall not have any effect on the passage of risk, even if the application of Incoterms and Trade Terms has been agreed in this respect.

7. Examination and notice of non-conformity

Any existing defect recognisable in an acceptable examination must be reported in writing at the latest within 8 days after arrival of the goods at the location, any hidden defects must be reported immediately after detection. If special conditions have been agreed regarding the type of examination of the goods, this examination shall be performed in the manufacturer's plant. If in this case the purchaser fails to perform the examination of the goods in the factory in spite of notification of a deadline and instruction about the consequences, the goods shall be deemed approved on leaving the factory. All costs of the examination are to be borne by the purchaser.

8. Warranty

The seller shall grant warranty as follows for defects of quality and legal defects with the exclusion of any further claims and subject to section 9,

Defects of quality

a. All those parts shall be rectified free of charge or replaced by new parts at the discretion of the seller which are determined to be defective as a result of a circumstance occurring prior to the passage of risk. The seller shall be notified in writing immediately of the detection of such defects. Ownership of replaced parts shall pass to the seller.
b. After consultation with the seller, the purchaser shall give the seller the required time and opportunity to carry out all repairs and replacement deliveries the seller considers to be necessary, otherwise the seller shall be relieved of the liability for consequences resulting therefrom. Only in urgent cases of a hazard to safe operation and/or to ward off disproportionately large damage shall the purchaser have the right to eliminate the defect himself or have it eliminated by third parties and to claim compensation for the necessary expenses from the seller; in such cases the seller must be immediately notified.
c. To the extent the complaint proves to be justified, the seller shall bear the costs of the replacement part including dispatch as well as the reasonable costs of disassembly and assembly, and if this can be duly requested on the basis of the individual case, the costs of any required deployment of his fitters and assistants as the share of the costs incurred as a result of rectification and/or replacement delivery.
d. Within the framework of the statutory regulations and taking into consideration the statutory exceptions, the purchaser shall have a right to withdraw from the contract, if the seller allows a reasonable time requested by the purchaser for the rectification or replacement delivery owing to a defect in quality to elapse without effect. In the case of a minor defect, the purchaser shall only be entitled to reduce the contract price. Otherwise the right to reduce the contract price remains excluded.
e. No warranty shall be granted in particular in the following cases: Improper or inappropriate use, incorrect assembly and/or putting into service by the purchaser or third parties, natural wear and tear, improper or negligent handling, improper maintenance, unsuitable operating materials, faulty civil engineering work, unsuitable building site, chemical, electrochemical or electrical influences for which the seller cannot be held responsible.
f. In the case of improper rectification by the purchaser or a third party, the seller shall not beliable for any consequences arising therefrom. The same shall apply for modifications of the goods delivered carried out without the prior consent of the seller.

Legal defects

g. Should the use of the goods delivered result in infringement of industrial property rights and copyright in the country, the seller shall procure at his own cost the general right for further use for the purchaser or modify the goods delivered in a way acceptable to the purchaser in order to ensure that no further infringement of industrial property rights exists. If this is not possible on economically appropriate conditions or in an appropriate time, the purchaser shall be entitled to withdraw from the contract. Under the above-mentioned conditions, the seller shall also be entitled to withdraw from the contract. Furthermore, the seller shall release the purchaser from any undisputed or validly decided claims of the owners of industrial property rights concerned.

h. The obligations of the seller laid down in section 8 shall be final subject to section 9 for the case of infringement of industrial property rights and copyright infringement.
They only exist, if:

– the purchaser informs the seller immediately of any claims made regarding industrial property rights and copyright infringements,
– the purchaser supports the seller in warding off the claims made in adequate scope and/or enables the seller to carry out the modification measures according to section 8 g,
– all defensive measures including settlement out of court are reserved for the seller,
– the legal defect is not based on an instruction of the purchaser and
– the infringement was not caused by the purchaser changing the goods delivered without authorisation or not using them in the manner specified in the contract.

9. Liability

a. If the goods delivered cannot be used by the purchaser as laid down in the contract due to fault of the seller as a result of neglected or faulty implementation of suggestions and consultations prior to or after conclusion of the contract or by violation of other contractual accessory obligations, in particular instructions for operation and maintenance of the goods delivered, the provisions of sections 8 and 9 b shall apply accordingly with the exclusion of any further claims of the purchaser.

b. For damage not caused on the goods delivered themselves, the seller shall only be liable no matter which might be the legal reasons:

– in the event of wrongful intent,
– in the event of gross negligence on the part of the owner/managing bodies or executives,
– in the event of negligent injury to life, body, health,
– in the event of defects which he has concealed fraudulently or the absence of which he has guaranteed,
– in the event of defects of the goods delivered to the extent that according to product liability legislation, liability applies for damage to persons or property on privately used objects. In the event of negligent breach of major contractual obligations, the seller shall also be liable for gross negligence of non-executives and slight negligence, in such a case liability shall be limited to damage typical of the contract and reasonably foreseeable. Any further claims shall be excluded.

c. Force Majeure
Seller shall not be liable for any delay or failure to perform its obligations under any order or sales contract arising out of causes beyond its reasonable control (a “Force Majeure Event”), including, but not limited to, acts of God or public enemy, acts of other parties, acts of civil and military authority, epidemics, pandemics, unusually severe weather, shortage of power or fuel, strikes, lockouts, boycotts, or other labor troubles, government regulations, or delays of Seller’s subcontractors or suppliers in furnishing materials, components, tools or supplies due to any one or more of the foregoing causes. In no event shall Seller be liable for any damages to Buyer caused thereby whether direct, indirect, special, incidental or consequential.

10. Reservation of ownership

The goods delivered shall remain our property until full payment of any and all claims including those incurred in future, which we are entitled to as a result of the business relationship with the purchaser, regardless of the legal reason. The purchaser shall be entitled to use our goods as intended, to process them and to deliver and sell them like a reseller in the ordinary course of business. The Purchaser shall not be entitled to any other disposal of the goods supplied under reservation. If our goods are combined to form a single item with other objects by us on behalf of the purchaser or by the purchaser, it is agreed that the purchaser hereby grants the prorata coownership to us in the sense of Section 947 (1) BGB (German civil code) and holds the item in safe custody for us. If goods are sold for which we have rights of ownership in accordance with the above provisions, the purchaser shall irrevocably transfer at this moment the total claim, if co-ownership applies prorata from the purchase contract, which is at the basis, up to the amount of our residual claim.
The purchaser shall be entitled to collect these claims as long as he fulfils his obligations towards us without any limitation. The purchaser shall immediately notify us by registered letter of any seizure, confiscations or other disposal by third parties and take all measure required to uphold our rights at his own cost. We undertake to release securities we are entitled to on the request of the purchaser at our discretion if their value exceeds the claim to be secured by 25 %.
In the case of open accounts the property subject to reservation of title shall serve as security for our payment balance claim. For the duration of reservation of ownership the purchaser shall be obliged to preserve the purchased goods in appropriate condition and to insure them against fire and theft; if requested by us also against machinery breakdown and to prove this to us as well as to transfer to us the claims against the insurance companies at our request.

11. Right of rescission and other rights

In the case of a significant deterioration of the purchaser’s economic and financial circumstances, if the purchaser pledges his warehouse, outstanding claims or sold goods or assigns or transfers ownership of them as security to other creditors or if the purchaser falls into arrears with major shares of his payments, we shall be entitled to require security and, if sufficient security cannot be registered, to make due the residual claim we have or to withdraw from the contract after having granted a reasonable extension of time.
The above provision shall also apply, if the purchaser dies, discontinues his business operations or transfers them to a third party. Should our residual claim not be paid, the purchaser’s right of use for the goods supplied under reservation shall expire. We shall be entitled to request immediate handover of our property. Resumption of possession of the goods delivered shall not be deemed as withdrawal from the contract unless the Instalment Payment Act is applicable. The payment obligation of the Purchaser shall remain unaffected.
We shall be entitled to make the best possible use of the goods supplied in voluntary sale at the expense and for the account of the purchaser. The costs of resumption of possession and exploitation will be charged at a rate of 5 % of the revenue from selling without special verification. Additional costs shall be verified.
In the case of legal transactions in the sense of the Instalment Payment Act, we shall also be entitled to withdraw from the contract if the purchaser fails to pay an instalment. In such a case the compensation for use or any replacement for damage may be bindingly determined in an assessment by a sworn expert to be initiated by us. The compensation for use and the replacement for damage shall in this case be calculated as the difference between instalment price and estimated price. Any saved intermediate interests and financing costs shall be made good.

12. Return deliveries

Return deliveries of any kind in principle require our consent and shall be sent in together with the completed form for return deliveries. Otherwise processing is not possible in our company and will result in them being returned to the customer with dispatch unpaid.

13. Warranty processing

We reserve the right to have the equipment transported to our factory at Wuppertal, Germany, for assessment during the warranty period. Any and all warranty claims are based on regular maintenance and inspection of the equipment in compliance with the UVV accident prevention regulations.

14. Choice of venue and place of fulfilment

German law shall govern the contractual relationship. Should individual terms of the contract be ineffective, the remaining contract shall not be affected. Place of fulfilment for both parties is 42329 Wuppertal, Germany. The legal venue is agreed to be Wuppertal in Germany as far as this is legally admissible. We use electronic data processing taking into consideration the Federal German Data Protection Act.

15. Current General Terms and Conditions

You can find the latest version of our General Terms and Conditions at any time at **www.cmco.com**.

April 2024

COLUMBUS McKINNON Industrial Products GmbH
Yale-Allee 30 · 42329 Wuppertal

COLUMBUS McKINNON Industrial Products GmbH

Yale-Allee 30
42329 Wuppertal

Phone: +49 202/693 59-0
Fax: +49 202/693 59-127
Website: www.cmco.com
E-mail: info.wuppertal@cmco.com

Subject to engineering changes and improvements.
No warranty for printing errors or mistakes.

Effective April 2024.

Reproduction or reprinting of this catalogue only with written permission.

INTELLIGENT MOTION
Columbus McKinnon

CMCO No.5 en 98999999 4/2024