MECLUBE

COMPLETE FUEL SOLUTIONS

DIESEL / GASOLINE / AdBlue®/DEF

meclube.com

WE ARE MECLUBE
WE ARE PASSION!

EDICIÓN **2026**

meclube.com

Fully Italian production

MECLUBE gives to all its customers the availability of a global service, assured by a wide range of products. The excellent relation between quality/price and the respect of the delivery time make our company an ideal partner. Thanks to the high flexibility of our modalities of production we are able to establish an exceptional relation with our customers that comes true in the customization, in the colour, in the brand of the company on the standard range of our products. Our purchase cycle becomes complete with a speedy and qualified assistence service.

Service

Our company is able to offer to all our customers items of high quality and availability. It has a modern and innovative equipment of project, a lot of machines with a huge productive potential, a wide range of stamps, manufacturing cycles, tools, test and assemby machinery. Our customers represent the most important patrimony of MECLUBE. We are convinced that people make the difference, and we are at their disposal to start a relationship of growth and innovation, always having in mind the only possible result: the best one.

DIESEL FAMILY INDEX

ELECTRIC PUMPS KIT “Battery Kit” ....page. 4

ELECTRIC PUMPS KIT “Diesel Bag” ....page. 6

12-24V ELECTRIC PUMPS KIT “Barrel Kit” ....page. 8

230-115V ELECTRIC PUMPS KIT “Transfer Kit” ....page. 12

230-115V ELECTRIC PUMPS KIT “Barrel Kit” ....page. 16

CENTRIFUGAL PUMPS KIT “Dispenser Kit” ....page. 20

WALL DISPENCER TRANSFER “Compact” ....page. 24

WALL DISPENCER TRANSFER “Wall Mec” ....page. 30

CABINET DISPENCER “Meclube Box” ....page. 38

DISTRIBUTOR DISPENCER “Mec-Reel” ....page. 46

DISPENCER GROUP “Double-Pump” ....page. 50

DIESEL TRANSFER SYSTEM “Cami Dispenser” ....page. 52

DIESEL TRANSFER SYSTEM “Gaia Service” ....page. 64

HOSE REEL SUPPORT BASE COLUMN ....page. 70

ELECTRONIC CONTROL UNIT “MecGest Box” ....page. 72

DIESEL TRANSFER SYSTEM “Service Station” ....page. 76

TANK FOR DIESEL TRANSPORT “Diesel tank” ....page. 80

TANK FOR DIESEL TRANSPORT “Caddy” ....page. 100

“Multitank” “Tank in Tank” ....page. 102

WHEELED FILTER GROUP “Mec-Filter” ....page. 104

WHEELED FILTER GROUP “EcoFilter” ....page. 108

DC 12-24V BATTERY PUMPS FOR DIESEL ....page. 110

AC 230-115V ELECTRIC PUMPS FOR DIESEL page.113

AC 230-400V HIGH FLOW MOTOR PUMP FOR DIESEL page.119

ELECTRIC PUMPS FOR OIL AND LUBRICANTS ....page. 120

MECHANICAL/DIGITAL METERS FOR DIESEL ....page. 122

ACCESSORIES FOR ELECTRONIC CONTROL UNIT ....page. 126

MANUAL NOZZLES ....page. 127

AUTOMATIC NOZZLES ....page. 128

WATER SEPARATING DELIVERY FILTERS ....page. 131

SUCTION HOSE KITS FOR DIESEL
ANTISTATIC RUBBER HOSES FOR DIESEL ....page. 134

VALVES FILTERS FITTINGS ....page. 136

JERRY CANS FOR FUEL TRANSFER ....page. 138

MANUAL PUMPS FOR DIESEL ....page. 139

AUTOMATIC HOSE REELS FOR DIESEL ....page. 140

QUICK CONNECTORS “Camlock” ....page. 156

GASOLINE FAMILY INDEX

ELECTRIC PUMPS KIT "Benz Kit" ....page. 158

TANK FOR GASOLINE TRANSPORT "Benz-Tank" ....page. 164

TANK FOR GASOLINE TRANSPORT "Caddy" ....page. 166

ELECTRIC PUMP FOR GASOLINE ....page. 168

MECHANICAL/DIGITAL METERS FOR GASOLINE ....page. 169

AUTOMATIC HOSE REELS FOR GASOLINE ....page. 170

DEF-AdBlue® FAMILY INDEX

ELECTRIC PUMPS FOR DEF KIT "DEF-AdBlue® IBC" ....page. 178

ELECTRIC PUMPS FOR DEF KIT "Barrel Kit DEF-AdBlue®" ....page. 184

PORTABLE ELECTRIC PUMPS KIT FOR DEF-AdBlue® ....page. 188

CABINET DISPENCER FOR DEF "Meclube Box DEF-AdBlue®" ....page. 192

"ELECTRONIC CAMI DISPENSER FOR DEF-AdBlue®" ....page. 196

"ELECTRONIC GAIA SERVICE DEF-AdBlue®" ....page. 200

TANK FOR DEF TRANSPORT "DEF-AdBlue® Tank" ....page. 204

DEF-DEF-AdBlue® TANK-DISTRIBUTOR "DEF-Tank" ....page. 208

TANK FOR DEF-AdBlue® TRANSPORT "Caddy" ....page. 210

TRANSFER KIT FOR DEF-AdBlue® "Giuly-Blu" ....page. 212

TRANSFER KIT FOR DEF-AdBlue® "Eco-Blu" ....page. 216

TROLLEYS FOR DRUMS 180-220L ....page. 218

ELECTRIC DIAPHRAGM PUMPS FOR DEF-AdBlue® ....page. 220

ELECTRIC-PUMP FOR DEF-AdBlue® "Mec-Ariel" ....page. 222

AIR-OPERATED DOUBLE DIAPHRAGM PUMPS ....page. 224

MANUAL/AUTOMATIC NOZZLES FOR DEF-AdBlue® ....page. 226

DIGITAL FLOW METERS AND FILTERS FOR DEF-AdBlue® ....page. 228

ACCESSORIES FOR ELECTRONIC CONTROL UNIT ....page. 229

FITTINGS AND CONNECTIONS FOR DEF-AdBlue®
SUCTION HOSES KIT FOR DEF-AdBlue® ....page. 230

MANUAL PUMPS FOR DEF-AdBlue® TRANSFER page.232

AUTOMATIC HOSE REELS FOR DEF-AdBlue®
MANUAL NOZZLES FOR FOOD page.234

DIGITAL FLOW METER FOR FOOD
TROLLEY FOR 20-30L DRUMS ....page. 240

STAINLESS STEEL MANUAL PUMP ....page. 241

ELECTRIC PUMPS KIT FOR DIESEL TRANSFER “Battery Kit”

Portable diesel transferring kit with 12V or 24V DC electric pump. It is useful when the distribution or the diesel fuel transfer are needed, but only the electric power supply of a battery is available.

“Battery Kit” series composed by:

Art. 091-5080-045 12V Pump - power cable (sec. 2,5 mmq, 2 m lenght) with pincers and fuse - 45 l/min

Art. 091-5082-045 24V Pump - power cable (sec. 2,5 mmq, 2 m lenght) with pincers and fuse - 45 l/min

Art. 091-5081-060 12V Pump - power cable (sec. 4 mmq, 4 m lenght) with pincers and fuse - 60 l/min

Art. 091-5083-060 24V Pump- power cable (sec. 4 mmq, 4 m lenght) with pincers and fuse - 60 l/min

Art. 091-6081-085 Pump 12 V - power cable (sec. 6 mmq, 4 m lenght) with pincers and fuse - 85 l/min

Art. 091-6083-085 24 V Pump - power cable (sec. 6 mmq, 4 m lenght) with pincers and fuse - 85 l/min

Art. 908-0516-040 Connection hose ø 20 mm M-M 1” 4 m lenght

Art. 095-5430-020 Suction hose kit ø 25 mm, 2 m lenght

Art. 093-5200-000 Manual nozzle MC80 Flow rate 80 l/min

Art. 093-5210-000 Automatic nozzle PA60 Flow rate 70 l/min

Art. 093-5215-000 Automatic nozzle PA90 Flow rate 90 l/min

ELECTRIC PUMPS KIT FOR DIESEL TRANSFER “Battery Kit”

Ref.	Descrip.	Flow rate	Voltage	Power	Inlet-Outlet	Conn. Hose	Nozzle	Duty cycle	Wei-ght	Packaging
		l/min	DC Volt	W	BSPG	Ø		min	Kg	mm
090-5025-045	Battery kit	**45**	12	264	F1” - F1”	20	Manual	40	9.50	410X400X270
090-5025-060	Battery kit	**60**	12	336	F1" - F1"	20	Manual	40	10,70	410X400X270
090-5025-085	Battery kit	**85**	12	432	F1" - F1"	20	Manual	S2 30	13,65	410X400X270
090-5026-045	Battery kit	**45**	24	312	F1" - F1"	20	Manual	40	9.50	410X400X270
090-5026-060	Battery kit	**60**	24	432	F1" - F1"	20	Manual	40	10,70	410X400X270
090-5026-085	Battery kit	**85**	24	432	F1" - F1"	20	Manual	S2 30	13,65	410X400X270
090-5027-045	Battery kit	**45**	12	264	F1" - F1"	20	Aut.PA60	40	9.80	410X400X270
090-5027-060	Battery kit	**60**	12	336	F1" - F1"	20	Aut.PA60	40	11,20	410X400X270
090-5027-085	Battery kit	**85**	12	432	F1" - F1"	20	Aut.PA90	S2 30	14,55	410X400X270
090-5028-045	Battery kit	**45**	24	312	F1" - F1"	20	Aut.PA60	40	9.80	410X400X270
090-5028-060	Battery kit	**60**	24	432	F1" - F1"	20	Aut.PA60	40	11,20	410X400X270
090-5028-085	Battery kit	**85**	24	432	F1" - F1"	20	Aut.PA90	S2 30	14,55	410X400X270

ELECTRIC PUMPS KIT FOR DIESEL TRANSFER “Diesel Bag”

Portable Diesel Bag with 12V or 24V DC electric pump. It is useful when the distribution or the diesel fuel transfer are needed, but only the electric power supply of a battery is available. Equipped with a practical plastic case that allows the operator to work safely while maintaining a clean work environment.

“Diesel Bag” series composed by:

Art. 091-5080-045 12V Pump- power cable (sec. 2,5 mmq, 2 m lenght) with pincers and fuse - 45 l/min

Art. 091-5082-045 24V Pump- power cable (sec. 2,5 mmq, 2 m lenght) with pincers and fuse - 45 l/min

Art. 908-0516-040 Connection hose ø 20 mm M-M 1” 4 m lenght

Art. 095-5430-020 Suction kit hose ø 25 mm 2 m lenght

Art. 093-5200-000 Manual nozzle MC80 Flow rate 80 l/min

Art. 093-5210-000 Automatic nozzle PA60 Flow rate 70 l/min

Art. A11-3000-001 Protective gloves

Art. 090-5020-000 Portable plastic box 410x600x224

ELECTRIC PUMPS KIT FOR DIESEL TRANSFER “Diesel Bag”

Ref.	Descrip.	Flow Rate	Voltage	Power	Inlet-Outlet	Conn. Hose	Nozzle	Duty Cicle	Wei-ght	Packaging
		l/min	DC Volt	W	BSPG	Ø		min	Kg	mm
090-5021-B45	Diesel Bag	**45**	12	264	F1” - F1”	20	Manual	40	12,30	420X610X235
090-5022-B45	Diesel Bag	**45**	24	312	F1" - F1"	20	Manual	40	12,75	420X610X235
090-5023-B45	Diesel Bag	**45**	12	264	F1" - F1"	20	Aut.PA60	40	12,30	420X610X235
090-5024-B45	Diesel Bag	**45**	24	312	F1" - F1"	20	Aut.PA60	40	12,75	420X610X235

ELECTRIC PUMPS KIT FOR DIESEL TRANSFER “Barrel Kit”

Portable diesel transferring kit with 12V or 24V DC electric pump. It is useful when the distribution or the diesel fuel transfer are needed, but only the electric power supply of a battery is available.

“Barrel Kit” series composed by:

Art. 091-5080-045 12V Pump- power cable (sec. 2,5 mmq, 2 m lenght) with pincers and fuse - 45 l/min

Art. 091-5082-045 24V Pump- power cable (sec. 2,5 mmq, 2 m lenght) with pincers and fuse - 45 l/min

Art. 091-5081-060 12V Pump- power cable (sec. 4 mmq, 4 m lenght) with pincers and fuse - 60 l/min

Art. 091-5083-060 24V Pump- power cable (sec. 4 mmq, 4 m lenght) with pincers and fuse - 60 l/min

Art. 091-6081-085 12 V Pump- power cable (sec. 6 mmq, 4 m lenght) with pincers and fuse - 85 l/min

Art. 091-6083-085 24 V Pump- power cable (sec. 6 mmq, 4 m lenght) with pincers and fuse - 85 l/min

Art. 908-0516-040 Connection hose ø 20 mm M-M 1” 4 m lenght

Art. 095-5284-000 Telescopic suction hose with foot valve M 1” 495<885 mm lenght

Art. 095-5280-609 M 1”- M 2” quick coupling

Art. 093-5200-000 Manual nozzle MC80 Flow rate 80 l/min

Art. 093-5210-000 Automatic nozzle PA60 Flow rate 70 l/min

Art. 093-5215-000 Automatic nozzle PA90 Flow rate 90 l/min

Art. 093-5306-000 Nozzle support bracket

ELECTRIC PUMPS KIT FOR DIESEL TRANSFER “Barrel Kit”

Ref.	Descrip.	Flow rate	Voltage	Power	Inlet-Outlet	Conn. Hose	Nozzle	Duty cycle	Wei-ght	Packaging
		l/min	DC Volt	W	BSPG	Ø		min	Kg	mm
090-5030-045	Barrel Kit	**45**	12	264	F1" - F1"	20	Manual	40	11,05	410X400X320
090-5030-060	Barrel Kit	**60**	12	336	F1" - F1"	20	Manual	40	12,45	410X400X320
090-5030-085	Barrel Kit	**85**	12	432	F1" - F1"	20	Manual	S2 30	15,35	410X400X320
090-5032-045	Barrel Kit	**45**	24	312	F1" - F1"	20	Manual	40	11,05	410X400X320
090-5032-060	Barrel Kit	**60**	24	432	F1" - F1"	20	Manual	40	12,45	410X400X320
090-5032-085	Barrel Kit	**85**	24	432	F1" - F1"	20	Manual	S2 30	15,35	410X400X320
090-5035-045	Barrel Kit	**45**	12	264	F1" - F1"	20	Aut.PA60	40	11,50	410X400X320
090-5035-060	Barrel Kit	**60**	12	336	F1" - F1"	20	Aut.PA60	40	12,85	410X400X320
090-5035-085	Barrel Kit	**85**	12	432	F1" - F1"	20	Aut.PA90	S2 30	16,25	410X400X320
090-5036-045	Barrel Kit	**45**	24	312	F1" - F1"	20	Aut.PA60	40	11,50	410X400X320
090-5036-060	Barrel Kit	**60**	24	432	F1" - F1"	20	Aut.PA60	40	12,85	410X400X320
090-5036-085	Barrel Kit	**85**	24	432	F1" - F1"	20	Aut.PA90	S2 30	16,25	410X400X320

ELECTRIC PUMPS KIT FOR DIESEL TRANSFER “Barrel Kit”

Portable diesel transferring kit with 12V or 24V DC electric pump. It is useful when the distribution or the diesel fuel transfer are needed, but only the electric power supply of a battery is available.

“Barrel Kit” series composed by:

Art. 091-5080-045 12V Pump- power cable (sec. 2,5 mmq, 2 m lenght) with pincers and fuse - 45 l/min

Art. 091-5082-045 24V Pump- power cable (sec. 2,5 mmq, 2 m lenght) with pincers and fuse - 45 l/min

Art. 091-5081-060 12V Pump- power cable (sec. 4 mmq, 4 m lenght) with pincers and fuse - 60 l/min

Art. 091-5083-060 24V Pump- power cable (sec. 4 mmq, 4 m lenght) with pincers and fuse - 60 l/min

Art. 091-6081-085 12 V Pump- power cable (sec. 6 mmq, 4 m lenght) with pincers and fuse - 85 l/min

Art. 091-6083-085 24 V Pump- power cable (sec. 6 mmq, 4 m lenght) with pincers and fuse - 85 l/min

Art. 092-5103-000 Mechanical flow meter 3 digits F1” 120 l/min

Art. 908-0516-040 Connection hose ø 20 mm M-M 1” 4 m lenght

Art. 095-5284-000 Telescopic suction hose with foot valve M 1” 495<885 mm lenght

Art. 095-5280-609 M 1”- M 2” quick coupling

Art. 093-5200-000 Manual nozzle MC80 Flow rate 80 l/min

Art. 093-5210-000 Automatic nozzle PA60 Flow rate 70 l/min

Art. 093-5215-000 Automatic nozzle PA90 Flow rate 90 l/min

Art. 093-5306-000 Nozzle support bracket

ELECTRIC PUMPS KIT FOR DIESEL TRANSFER “Barrel Kit”

Ref.	Descrip.	Flow rate	Voltage	Power	Inlet-Outlet	Conn. hose	Nozzle	Flow meter	Duty cycle	Wei-ght	Packaging
		l/min	DC Volt	W	BSPG	Ø			min	Kg	mm
090-5037-M45	Barrel Kit	**45**	12	264	F1"-F1"	20	Manual	YES	40	12,90	550X400X320
090-5037-M60	Barrel Kit	**60**	12	336	F1"-F1"	20	Manual	YES	40	14,30	550X400X320
090-5037-M85	Barrel Kit	**85**	12	432	F1"-F1"	20	Manual	YES	S2 30	17,82	550X400X320
090-5038-M45	Barrel Kit	**45**	24	312	F1"-F1"	20	Manual	YES	40	12,90	550X400X320
090-5038-M60	Barrel Kit	**60**	24	432	F1"-F1"	20	Manual	YES	40	14,30	550X400X320
090-5038-M85	Barrel Kit	**85**	24	432	F1"-F1"	20	Manual	YES	S2 30	17,82	550X400X320
090-5037-045	Barrel Kit	**45**	12	264	F1"-F1"	20	Aut.PA60	YES	40	13,32	550X400X320
090-5037-060	Barrel Kit	**60**	12	336	F1"-F1"	20	Aut.PA60	YES	40	14,70	550X400X320
090-5037-085	Barrel Kit	**85**	12	432	F1"-F1"	20	Aut.PA90	YES	S2 30	18,10	550X400X320
090-5038-045	Barrel Kit	**45**	24	312	F1"-F1"	20	Aut.PA60	YES	40	13,32	550X400X320
090-5038-060	Barrel Kit	**60**	24	432	F1"-F1"	20	Aut.PA60	YES	40	14,70	550X400X320
090-5038-085	Barrel Kit	**85**	24	432	F1"-F1"	20	Aut.PA90	YES	S2 30	18,10	550X400X320

ELECTRIC PUMPS KIT FOR DIESEL TRANSFER “Transfer Kit”

Transfer kit composed by electric vane pump 230V/115V, hose ø 20 4 m lenght, suction hose ø 25 2 m lenght complete with valve + filter, manual or automatic dispensing nozzle.

“Transfer Kit” series composed by:

Art. 091-6100-060 Electric pump AC 230V 50Hz MEC-60 l/min

Art. 091-6100-070 Electric pump AC 230V 50Hz MEC-70 l/min

Art. 091-6102-070 Electric pump AC 115V 60Hz MEC-70 l/min

Art. 908-0516-040 Connection hose ø 20 mm M-M 1” 4 m lenght

Art. 095-5440-020 Suction kit hose ø 25 mm 2 m lenght

Art. 093-5200-000 Aluminium manual nozzle MC80 Flow rate 80 l/min

Art. 093-5210-000 Automatic nozzle PA60 Flow rate 70 l/min

ELECTRIC PUMPS KIT FOR DIESEL TRANSFER “Transfer Kit”

Ref.	Descrip.	Flow rate	Voltage	Power	Inlet-Outlet	Conn. Hose	Nozzle	Duty cycle	Wei-ght	Packaging
		l/min	AC V./Hz	W	BSPG	Ø		min	Kg	mm
090-5260-060	Transfer Kit	**60**	230/50	440	F1"-F1"	20	Manual	Contin.	12,50	410X400X270
090-5260-070	Transfer Kit	**70**	230/50	480	F1"-F1"	20	Manual	Contin.	13,40	410X400X270
090-5260-07X	Transfer Kit	**70**	115/60	495	F1”-F1”	20	Manual	Contin.	13,70	410X400X270
090-5262-060	Transfer Kit	**60**	230/50	440	F1"-F1"	20	Aut.PA60	Contin.	12,90	410X400X270
090-5262-070	Transfer Kit	**70**	230/50	480	F1"-F1"	20	Aut.PA60	Contin.	14,00	410X400X270
090-5262-07X	Transfer Kit	**70**	115/60	495	F1"-F1"	20	Aut.PA60	Contin.	14,30	410X400X270

ELECTRIC PUMPS KIT FOR DIESEL TRANSFER “Transfer Kit”

Transfer kit composed by electric vane pump 230V / 115V, hose ø 25 4 m lenght, suction hose ø 25 2 m lenght complete with valve + filter, manual or automatic dispensing nozzle.

“Transfer Kit” series composed by:

Art. 091-6100-100 Electric Pump AC 230V 50Hz MEC-100 l/min

Art. 091-6102-100 Electric Pump AC 115V 60Hz MEC-100 l/min

Art. 091-6100-150 Electric Pump AC 230V 50Hz MEC-150 l/min

Art. 908-0616-040 Connection hose Ø 25 mm M 1” - M 1” m lenght

Art. 908-0718-040 Connection hose Ø 32 mm M 1 1.2” - M 1.1.4” m lenght

Art. 095-5440-020 Suction hose kit Ø 25 mm 2 m M 1” lenght

Art. 095-5457-020 Suction hose kit Ø 32 mm 2 m M 1.1.4” lenght

Art. 093-5200-000 Aluminium manual nozzle MC80 Flow rate 80 l/min

Art. 093-5220-000 Automatic nozzle PA120 Flow rate 120 l/min

Art. 093-5220-180 Automatic nozzle PA180 Flow rate 180 l/min

ELECTRIC PUMPS KIT FOR DIESEL TRANSFER “Transfer Kit”

Ref.	Descrip.	Flow rate	Voltage	Power	Inlet-Outlet	Conn. hose	Nozzle	Duty cycle	Wei-ght	Packaging
		l/min	AC V.Hz	W	BSPG	Ø		min	Kg	mm
090-5300-100	Transfer Kit	**100**	230/50	800	F1" - F1"	25	Manual	Contin.	19,50	410X400X270
090-5300-10X	Transfer Kit	**100**	115/60	1045	F1" - F1"	25	Manual	Contin.	19,80	410X400X270
090-5302-100	Transfer Kit	**100**	230/50	800	F1" - F1"	25	Aut.PA120	Contin.	20,40	410X400X270
090-5302-150	Transfer Kit	**150**	230/50	2780	F-F1 1.4”	32	Aut.PA180	Contin.	21,10	410X400X270
090-5302-10X	Transfer Kit	**100**	115/60	1045	F1" - F1"	25	Aut.PA120	Contin.	20,70	410X400X270

ELECTRIC PUMPS KIT FOR DIESEL TRANSFER “Barrel Kit”

Kit for diesel transfer from drums and barrels through electric vane pump 230V / 115V.

The kit is composed by metalic telescopic hose for suction, 2’’ quick coupling for drum fixing, manual or automatic dispensing nozzle, with support bracket to facilitate the usage of the dispenser.

“Barrel Kit” series composed by:

Art. 091-6100-060 Electric pump AC 230V 50Hz MEC-60 l/min

Art. 091-6100-070 Electric pump AC 230V 50Hz MEC-70 l/min

Art. 091-6102-070 Electric pump AC 115V 60Hz MEC-70 l/min

Art. 908-0516-040 Connection hose ø 20 mm M-M 1” 4 m lenght

Art. 095-5284-000 Telescopic suction hose with foot valve
M 1” 495<885 mm lenght

Art. 095-5280-609 M 1”- M 2” quick coupling

Art. 093-5200-000 Aluminium manual nozzle MC80 Flow rate 80 l/min

Art. 093-5210-000 Automatic nozzle PA60 Flow rate 70 l/min

Art. 093-5306-000 Nozzle support bracket

ELECTRIC PUMPS KIT FOR DIESEL TRANSFER “Barrel Kit”

Ref.	Descrip.	Flow rate	Voltage	Power	Inlet-Outlet	Conn. hose	Nozzle	Duty Cycle	Wei-ght	Packaging
		l/min	AC V./Hz	W	BSPG	Ø		min	Kg	mm
090-5039-M60	Barrel Kit	**60**	230/50	440	F1" - F1"	20	Man.	Contin.	14,20	410X400X320
090-5039-M70	Barrel Kit	**70**	230/50	480	F1" - F1"	20	Man.	Contin.	14,20	410X400X320
090-5039-M7X	Barrel Kit	**70**	115/60	650	F1" - F1"	20	Man.	Contin.	14,50	410X400X320
090-5039-060	Barrel Kit	**60**	230/50	440	F1" - F1"	20	Aut.PA60	Contin.	14,60	410X400X320
090-5039-070	Barrel Kit	**70**	230/50	480	F1" - F1"	20	Aut.PA60	Contin.	14,60	410X400X320
090-5039-07X	Barrel Kit	**70**	115/60	650	F1" - F1"	20	Aut.PA60	Contin.	14,90	410X400X320

ELECTRIC PUMPS KIT FOR DIESEL TRANSFER “Barrel Kit”

Kit for diesel transfer from drums and barrels through electric vane pump 230V / 115V. The kit is composed by metalic telescopic hose for suction, mechanical flow meter, 2’’ quick coupling for drum fixing, manual or automatic dispensing nozzle, with support bracket to facilitate the usage of the dispenser.

“Barrel Kit” series composed by:

Art. 091-6100-060 Electric pump AC 230V 50Hz MEC-60 l/min

Art. 091-6100-070 Electric pump AC 230V 50Hz MEC-70 l/min

Art. 091-6102-070 Electric pump AC 115V 60Hz MEC-70 l/min

Art. 092-5103-000 Mechanical flow meter 3 digits F1” 120 l/min

Art. 908-0516-040 Connection hose ø 20 mm M-M 1” 4 m lenght

Art. 095-5284-000 Telescopic suction hose with foot valve
M 1” 495<885 mm lenght

Art. 095-5280-609 M 1”- M 2” quick coupling

Art. 093-5200-000 Aluminium manual nozzle MC80 Flow rate 80 l/min

Art. 093-5210-000 Automatic nozzle PA60 Flow rate 70 l/min

Art. 093-5306-000 Nozzle support bracket

ELECTRIC PUMPS KIT FOR DIESEL TRANSFER “Barrel Kit”

Ref.	Descrip.	Flow rate	Voltage	Power	Inlet-Outlet	Conn. hose	Nozzle	Flow meter	Duty cycle	Wei-ght	Packaging
		l/min	AC V./Hz	W	BSPG	Ø			min	Kg	mm
090-5040-M60	Barrel Kit	**60**	230/50	440	F1" - F1"	20	Man.	YES	Contin.	16,00	550X400X320
090-5040-M70	Barrel Kit	**70**	230/50	480	F1" - F1"	20	Man.	YES	Contin.	16,00	550X400X320
090-5040-M7X	Barrel Kit	**70**	115/60	650	F1" - F1"	20	Man.	YES	Contin.	16,30	550X400X320
090-5040-060	Barrel Kit	**60**	230/50	440	F1" - F1"	20	Aut.PA60	YES	Contin.	16,50	550X400X320
090-5040-070	Barrel Kit	**70**	230/50	480	F1" - F1"	20	Aut.PA60	YES	Contin.	16,50	550X400X320
090-5040-07X	Barrel Kit	**70**	115/60	650	F1" - F1"	20	Aut.PA60	YES	Contin.	16,80	550X400X320

CENTRIFUGAL PUMP KIT FOR DIESEL TRANSFER “Dispenser Kit”

Centrifugal electric pump kit for diesel transfer. It is perfect for a quick and handy refuelling from barrels of diesel-powered vehicles. It is equipped with suction filter and integrated switch. It can be powered from electric line 230V / 115V and battery 12V / 24V.
It is connected to the barrel through M64x4 2’’ BSP.

“Dispenser Kit” series composed by:

Art. 091-5600-040 Electric pump 230V 50Hz 40 l/min

Art. 091-5602-040 Electric pump 115V 60Hz 40 l/min

Art. 091-5610-035 Electric pump 12V 35 l/min

Art. 091-5612-035 Electric pump 24 V 35 l/min

Art. 908-0500-040 Antistatic rubber hose for diesel ø19X27 mm 4 m lenght

Art. 093-5199-000 Plastic manual nozzle “MP120” Flow rate 120 l/min

Art. 093-5210-000 Automatic nozzle PA60 Flow rate 70 l/min

CENTRIFUGAL PUMP KIT FOR DIESEL TRANSFER “Dispenser Kit”

Ref.	Descrip.	Flow rate	Voltage	Power	Fixing to barrel	Conn. hose	Nozzle	Duty cycle	Wei-ght	Packaging
		l/min	AC V./Hz DC Volt	W	BSPG	Ø		min	Kg	mm
090-5400-040	Dispenser kit	**40**	230/50	224	2"	19	Man.	Contin.	4,00	410x400x270
090-5400-04X	Dispenser kit	**40**	115/60	320	2"	19	Man.	Contin.	4,00	410x400x270
090-5400-Y35	Dispenser kit	**35**	12	110	2"	19	Man.	Contin.	4,00	410x400x270
090-5400-Z35	Dispenser kit	**35**	24	135	2"	19	Man.	Contin.	4,00	410x400x270
090-5401-040	Dispenser kit	**40**	230/50	224	2"	19	Aut.PA60	Contin.	5,10	410x400x270
090-5401-04X	Dispenser kit	**40**	115/60	320	2"	19	Aut.PA60	Contin.	5,10	410x400x270
090-5401-Y35	Dispenser kit	**35**	12	110	2"	19	Aut.PA60	Contin.	5,10	410x400x270
090-5401-Z35	Dispenser kit	**35**	24	135	2"	19	Aut.PA60	Contin.	5,10	410x400x270

CENTRIFUGAL PUMP KIT FOR DIESEL TRANSFER "Dispenser Kit"

Centrifugal electric pump kit for diesel transfer. It is perfect for a quick and handy refuelling from barrels of diesel-powered vehicles. It is equipped with suction filter and integrated switch. It can be powered from electric line 230V / 115V and battery 12V / 24V.
It is connected to the barrel through M64x4 2'' BSP.

"Dispenser Kit" series composed by

Art. 091-5600-040 Electric pump 230V 50Hz 40 l/min

Art. 091-5602-040 Electric pump 115V 60Hz 40 l/min

Art. 091-5610-035 Electric pump 12V 35 l/min

Art. 091-5612-035 Electric pump 24 V 35 l/min

Art. 092-5124-000 Digital turbine flow meter MEC 24
min/max flow rate 7/120 l/min

Art. 908-0500-040 Antistatic rubber hose for diesel ø19X27 mm 4 m lenght

Art. 093-5199-000 Plastic manual nozzle "MP120" Flow rate 120 l/min

Art. 093-5210-000 Automatic nozzle PA60 Flow rate 70 l/min

CENTRIFUGAL PUMP KIT FOR DIESEL TRANSFER "Dispenser Kit"

Ref.	Descrip.	Flow rate	Voltage	Power	Fixing to barell	Conn. hose	Nozzle	Flow meter	Duty cycle	Wei-ght	Packaging
		l/min	AC V./Hz DC Volt	W	BSPG	Ø			min	Kg	mm
090-5402-040	Dispenser kit	**40**	230/50	224	2"	19	Man	YES	Contin.	4,45	410x400x270
090-5402-04X	Dispenser kit	**40**	115/60	320	2"	19	Man.	YES	Contin.	4,45	410x400x270
090-5402-Y35	Dispenser kit	**35**	12	110	2"	19	Man.	YES	Contin.	4,45	410x400x270
090-5402-Z35	Dispenser kit	**35**	24	135	2"	19	Man.	YES	Contin.	4,45	410x400x270
090-5403-040	Dispenser kit	**40**	230/50	224	2"	19	Aut.PA60	YES	Contin.	5,45	410x400x270
090-5403-04X	Dispenser kit	**40**	115/60	320	2"	19	Aut.PA60	YES	Contin.	5,45	410x400x270
090-5403-Y35	Dispenser kit	**35**	12	110	2"	19	Aut.PA60	YES	Contin.	5,45	410x400x270
090-5403-Z35	Dispenser kit	**35**	24	135	2"	19	Aut.PA60	YES	Contin.	5,45	410x400x270

WALL DISPENSER FOR DIESEL TRANSFER “Compact”

Diesel transferring kit for private use. It allows the quick and safe filling of the vehicles.

All the accessories to complement the dispenser are available.

“Compact” composed by:

Art. 091-5081-045 12V Pump - power cable (sec. 4 mmq, 4 m lenght) with pincers and fuse - 45 l/min

Art. 091-5083-045 24V Pump- power cable (sec. 4 mmq, 4 m lenght) con pincers and fuse - 45 l/min

Art. 091-5081-060 12V Pump- power cable (sec. 4 mmq, 4 m lenght) with pincers and fuse - 60 l/min

Art. 091-5083-060 24V Pump- power cable (sec. 4 mmq, 4 m lenght) with pincers and fuse - 60 l/min

Art. 091-6100-060 Electric pump AC 230V 50Hz MEC-60 l/min

Art. 091-6100-070 Electric pump AC 230V 50Hz MEC-70 l/min

Art. 091-6100-100 Electric pump AC 230V 50Hz MEC-100 l/min

Art. 091-6102-070 Electric pump AC 115V 60Hz MEC-70 l/min

Art. 091-6102-100 Electric pump AC 115V 60Hz MEC-100 l/min

Art. 908-0516-040 Connection hose ø 20 mm M-M 1” 4 m lenght

Art. 908-0616-040 Connection hose ø 25 mm M-M 1” 4 m lenght

Art. 093-5200-000 Aluminium manual nozzle MC80 Flow rate 80 l/min

Art. 093-5210-000 Automatic nozzle PA60 Flow rate 70 l/min

Art. 093-5220-000 Automatic nozzle PA120 Flow rate 120 l/min

OPTIONAL:

Suction hose kit

Cartridge filter

WALL DISPENSER FOR DIESEL TRANSFER “Compact”

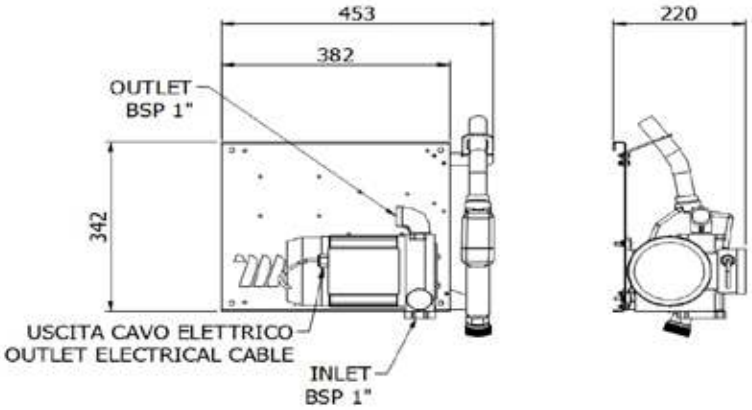

Ref.	Descrip.	Flow rate	Voltage	Power	Inlet-outlet	Conn. hose	Nozzle	Duty cycle	Wei-ght	Packaging
		l/min	AC V./Hz DC Volt	W	BSPG	Ø		min	Kg	mm
090-5043-060	Compact	**60**	230/50	440	F1" - F1"	20	Aut.PA60	Contin.	15,50	410X400X320
090-5043-070	Compact	**70**	230/50	480	F1" - F1"	20	Aut.PA60	Contin.	15,50	410X400X320
090-5043-100	Compact	**100**	230/50	800	F1" - F1"	25	Aut.PA120	Contin.	22,00	410X400X320
090-5044-060	Compact	**60**	230/50	440	F1" - F1"	20	Man.	Contin.	14,90	410X400X320
090-5044-070	Compact	**70**	230/50	480	F1" - F1"	20	Man.	Contin.	14,90	410X400X320
090-5044-100	Compact	**100**	230/50	800	F1" - F1"	25	Man.	Contin.	21,00	410X400X320
090-5043-07X	Compact	**70**	115/60	650	F1" - F1"	20	Aut.PA60	Contin.	15,80	410X400X320
090-5043-10X	Compact	**100**	115/60	1045	F1" - F1"	25	Aut.PA120	Contin.	22,28	410X400X320
090-5044-07X	Compact	**70**	115/60	650	F1" - F1"	20	Man.	Contin.	15,40	410X400X320
090-5044-10X	Compact	**100**	115/60	1045	F1" - F1"	25	Man.	Contin.	21,30	410X400X320
090-5043-Y45	Compact	**45**	12	264	F1" - F1"	20	Aut.PA60	40	12,15	410X400X320
090-5043-Z45	Compact	**45**	24	312	F1" - F1"	20	Aut.PA60	40	12,15	410X400X320
090-5043-Y60	Compact	**60**	12	336	F1" - F1"	20	Aut.PA60	40	13,30	410X400X320
090-5043-Z60	Compact	**60**	24	432	F1" - F1"	20	Aut.PA60	40	13,30	410X400X320
090-5044-Y45	Compact	**45**	12	264	F1" - F1"	20	Man.	40	11,60	410X400X320
090-5044-Z45	Compact	**45**	24	312	F1" - F1"	20	Man.	40	11,60	410X400X320
090-5044-Y60	Compact	**60**	12	336	F1" - F1"	20	Man.	40	12,75	410X400X320
090-5044-Z60	Compact	**60**	24	432	F1" - F1"	20	Man.	40	12,75	410X400X320

WALL DISPENSER FOR DIESEL TRANSFER “Compact”

Diesel transferring kit for private use. It allows the quick and safe filling of the vehicles.

It also permits to measure and record the dispensed quantities.

All the accessories to complement the dispenser are available.

“Compact” series composed by:

Art. 091-5081-045 12V Pump - power cable (sec. 4 mmq, 4 m lenght) with pincers and fuse - 45 l/min
Art. 091-5083-045 24V Pump - power cable (sec. 4 mmq, 4 m lenght) with pincers and fuse- 45 l/min
Art. 091-5081-060 12V Pump - power cable(sec. 4 mmq, 4 m lenght) with pincers and fuse - 60 l/min
Art. 091-5083-060 24V Pump- power cable (sec. 4 mmq, 4 m lenght) with pincers and fuse - 60 l/min
Art. 091-6081-085 12V Pump - power cable(sec. 6 mmq, 4 m lenght) with pincers and fuse - 85 l/min
Art. 091-6083-085 24V Pump- power cable (sec. 6 mmq, 4 m lenght) with pincers and fuse - 85 l/min

Art. 091-6100-060 Electric pump AC 230V 50Hz MEC-60 l/min
Art. 091-6100-070 Electric pump AC 230V 50Hz MEC-70 l/min
Art. 091-6100-100 Electric pump AC 230V 50Hz MEC-100 l/min
Art. 091-6102-070 Electric pump AC 115V 60Hz MEC-70 l/min
Art. 091-6102-100 Electric pump AC 115V 60Hz MEC-100 l/min

Art. 908-0516-040 Connection hose ø 20 mm M-M 1” 4 m lenght
Art. 908-0616-040 Connection hose ø 25 mm M-M 1” 4 m lenght

Art. 093-5200-000 Aluminium manual nozzle MC80 Flow rate 80 l/min

Art. 093-5210-000 Automatic nozzle PA60 Flow rate 70 l/min
Art. 093-5215-000 Automatic nozzle PA90 Flow rate 90 l/min
Art. 093-5220-000 Automatic nozzle PA120 Flow rate 120 l/min

Art. 092-5103-000 Mechanical flow meter 3 digits F1” 120 l/min 3C
Art. 092-5104-000 Mechanical flow meter 4 digits F1” 120 l/min 4C

OPTIONAL:

Suction hose kit

Cartridge filter

WALL DISPENSER FOR DIESEL TRANSFER “Compact”

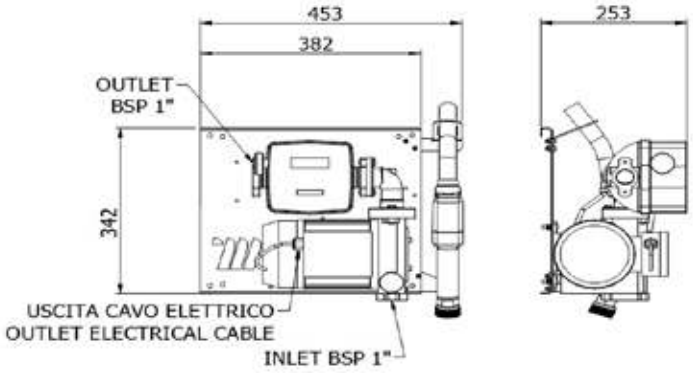

Ref.	Descrip.	Flow rate	Voltage	Power	Inlet-outlet	Conn. hose	Nozzle	Flow meter	Duty cycle	Wei-ght	Packaging
		l/min	AC V./Hz DC Volt	W	BSPG	Ø			min	Kg	mm
090-5045-060	Compact	**60**	230/50	440	F1"-F1"	20	Aut.PA60	3C	Contin.	17,55	410X400X320
090-5045-070	Compact	**70**	230/50	480	F1"-F1"	20	Aut.PA60	3C	Contin.	17,55	410X400X320
090-5045-100	Compact	**100**	230/50	800	F1"-F1"	25	Aut.PA120	4C	Contin.	23,90	410X400X320
090-5046-060	Compact	**60**	230/50	440	F1"-F1"	20	Manual	3C	Contin.	16,85	410X400X320
090-5046-070	Compact	**70**	230/50	480	F1"-F1"	20	Manual	3C	Contin.	16,85	410X400X320
090-5046-100	Compact	**100**	230/50	800	F1"-F1"	25	Manual	4C	Contin.	23,00	410X400X320
090-5045-07X	Compact	**70**	115/60	650	F1"-F1"	20	Aut.PA60	3C	Contin.	18,05	410X400X320
090-5045-10X	Compact	**100**	115/60	1045	F1"-F1"	25	Aut.PA120	4C	Contin.	24,20	410X400X320
090-5046-07X	Compact	**70**	115/60	650	F1"-F1"	20	Manual	3C	Contin.	17,35	410X400X320
090-5046-10X	Compact	**100**	115/60	1045	F1"-F1"	25	Manual	4C	Contin.	23,30	410X400X320
090-5045-Y45	Compact	**45**	12	264	F1"-F1"	20	Aut.PA60	3C	40	14,25	410X400X320
090-5045-Z45	Compact	**45**	24	312	F1"-F1"	20	Aut.PA60	3C	40	14,25	410X400X320
090-5045-Y60	Compact	**60**	12	336	F1"-F1"	20	Aut.PA60	3C	40	15,40	410X400X320
090-5045-Z60	Compact	**60**	24	432	F1"-F1"	20	Aut.PA60	3C	40	15,40	410X400X320
090-5046-Y45	Compact	**45**	12	264	F1"-F1"	20	Manual	3C	40	13,70	410X400X320
090-5046-Z45	Compact	**45**	24	312	F1"-F1"	20	Manual	3C	40	13,70	410X400X320
090-5046-Y60	Compact	**60**	12	336	F1"-F1"	20	Manual	3C	40	14,85	410X400X320
090-5046-Z60	Compact	**60**	24	432	F1"-F1"	20	Manual	3C	40	14,85	410X400X320
090-5046-Y85	Compact	**85**	12	432	F1"-F1"	20	Aut.PA90	4C	40	18,50	410X400X320
090-5046-Z85	Compact	**85**	24	432	F1"-F1"	20	Aut.PA90	4C	32	18,50	410X400X320

WALL DISPENSER FOR DIESEL TRANSFER “Compact”

Diesel transferring kit for private use. It allows the quick and safe filling of the vehicles.

It also permits to measure and record the dispensed quantities.

All the accessories to complement the dispenser are available.

“Compact” series composed by:

Art. 091-5081-045 12V Pump - power cable (sec. 4 mmq, 4 m lenght) with pincers and fuse - 45 l/min

Art. 091-5083-045 24V Pump - power cable (sec. 4 mmq, 4 m lenght) with pincers and fuse- 45 l/min

Art. 091-5081-060 12V Pump - power cable(sec. 4 mmq, 4 m lenght) with pincers and fuse - 60 l/min

Art. 091-5083-060 24V Pump- power cable (sec. 4 mmq, 4 m lenght) with pincers and fuse - 60 l/min

Art. 091-6081-085 12V Pump - power cable(sec. 6 mmq, 4 m lenght) with pincers and fuse - 85 l/min

Art. 091-6083-085 24V Pump- power cable (sec. 6 mmq, 4 m lenght) with pincers and fuse - 85 l/min

Art. 091-6100-060 Electric pump AC 230V 50Hz MEC-60 l/min

Art. 091-6100-070 Electric pump AC 230V 50Hz MEC-70 l/min

Art. 091-6100-100 Electric pump AC 230V 50Hz MEC-100 l/min

Art. 091-6102-070 Electric pump AC 115V 60Hz MEC-70 l/min

Art. 091-6102-100 Electric pump AC 115V 60Hz MEC-100 l/min

Art. 908-0516-040 Connection hose ø 20 mm M-M 1” 4 m lenght

Art. 908-0616-040 Connection hose ø 25 mm M-M 1” 4 m lenght

Art. 093-5210-000 Automatic nozzle PA60 Flow rate 70 l/min

Art. 093-5215-000 Automatic nozzle PA90 Flow rate 90 l/min

Art. 093-5220-000 Automatic nozzle PA120 Flow rate 120 l/min

Art. 092-5103-000 Mechanical flow meter 3 digits F1” 120 l/min 3C

Art. 092-5104-000 Mechanical flow meter 4 digits F1” 120 l/min 4C

Art. 094-5240-000 Water separating delivery filter for diesel 70 l/min

Art. 094-5245-000 Water separating delivery filter for diesel 150 l/min

OPTIONAL:

Suction hose kit

WALL DISPENSER FOR DIESEL TRANSFER “Compact”

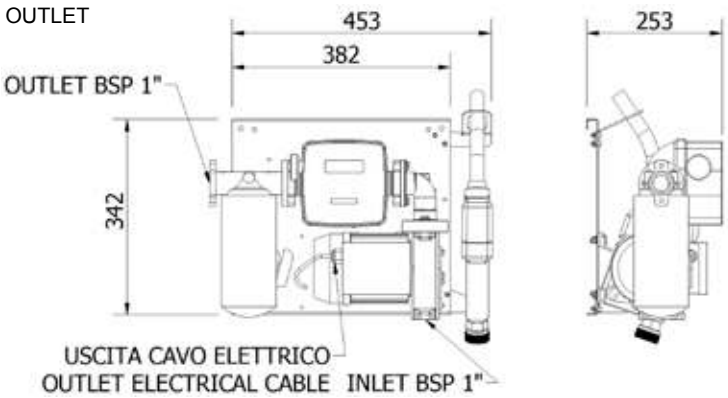

Ref.	Descrip.	Flow Rate	Voltage	Power	Inlet-Outlet	Conn. Hose	Nozzle	Flow meter/ Filter	Duty Cicle	Wei-ght	Packaging
		l/min	AC V./Hz DC Volt	W	BSPG	Ø			min	Kg	mm
090-5047-060	Compact	**60**	230/50	440	F1"-F1"	20	Aut.PA60	3C YES	Contin.	18,50	550X400X320
090-5047-070	Compact	**70**	230/50	480	F1"-F1"	20	Aut.PA60	3C YES	Contin.	18,50	550X400X320
090-5047-100	Compact	**100**	230/50	800	F1"-F1"	25	Aut.PA120	4C YES	Contin.	26,20	550X400X320
090-5047-07X	Compact	**70**	115/60	650	F1"-F1"	20	Aut.PA60	3C YES	Contin.	19,00	550X400X320
090-5047-10X	Compact	**100**	115/60	1045	F1"-F1"	25	Aut.PA120	4C YES	Contin.	26,50	550X400X320
090-5047-Y45	Compact	**45**	12	264	F1"-F1"	20	Aut.PA60	3C YES	40	15,40	550X400X320
090-5047-Z45	Compact	**45**	24	312	F1"-F1"	20	Aut.PA60	3C YES	40	15,40	550X400X320
090-5047-Y60	Compact	**60**	12	336	F1"-F1"	20	Aut.PA60	3C YES	40	16,55	550X400X320
090-5047-Z60	Compact	**60**	24	432	F1"-F1"	20	Aut.PA60	3C YES	40	16,55	550X400X320
090-5047-Y85	Compact	**85**	12	432	F1"-F1"	20	Aut.PA90	4C YES	30	20,80	550X400X320
090-5047-Z85	Compact	**85**	24	432	F1"-F1"	20	Aut.PA90	4C YES	30	20,80	550X400X320

WALL DISPENSER FOR DIESEL TRANSFER “Wall Mec”

Diesel transferring kit for private use. It allows the quick and safe filling of the vehicles.

It also permits to measure and record the dispensed quantities.

“Wall Mec” series composed by:

Art. 091-6100-060 Electric pump AC 230V 50Hz MEC-60 l/min

Art. 091-6100-070 Electric pump AC 230V 50Hz MEC-70 l/min
Art. 091-6102-070 Electric pump AC 115V 60Hz 70 l/min

Art. 091-6100-100 Electric pump AC 230V 50Hz MEC-100 l/min
Art. 091-6102-100 Electric pump AC 115V 60Hz 100 l/min

Art. 908-0516-060 Connection hose ø 20 mm M-M 1” 6 m lenght
Art. 908-0616-060 Connection hose ø 25 mm M-M 1” 6 m lenght

Art. 093-5210-000 Automatic nozzle PA60 Flow rate 70 l/min
Art. 093-5220-000 Automatic nozzle PA120 Flow rate 120 l/min

Art. 092-5103-000 Mechanical flow meter 3 digits F1” 120 l/min 3C
Art. 092-5104-000 Mechanical flow meter 4 digits F1” 120 l/min 4C

Art. 095-5440-040 Suction hose kit with valve Ø 25, 4 m lenght

WALL DISPENSER FOR DIESEL TRANSFER “Wall Mec”

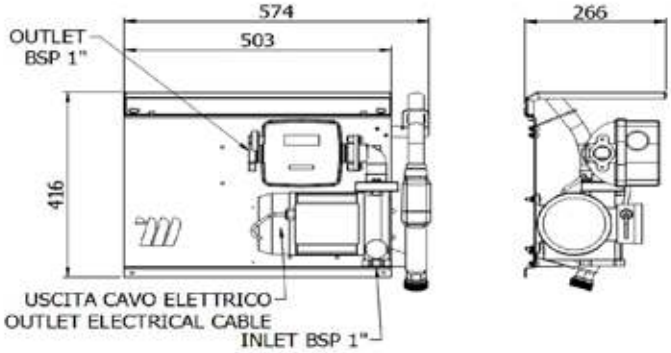

Ref.	Descrip.	Flow rate	Voltage	Power	Inlet-outlet	Conn. hose	Nozzle	Flow meter	Duty cycle	Wei-ght	Packaging
		l/min	AC V./Hz	W	BSPG	Ø			min	Kg	mm
Without suction hose kit											
090-5048-060	Wall Mec	**60**	230/50	440	F1" - F1"	20	Aut.PA60	3C	Contin.	20,50	550X400X320
090-5048-070	Wall Mec	**70**	230/50	480	F1" - F1"	20	Aut.PA60	3C	Contin.	20,50	550X400X320
090-5048-100	Wall Mec	**100**	230/50	800	F1" - F1"	25	Aut.PA120	4C	Contin.	26,70	550X400X320
090-5048-07X	Wall Mec	**70**	115/60	650	F1" - F1"	20	Aut.PA60	3C	Contin.	21,70	550X400X320
090-5048-10X	Wall Mec	**100**	115/60	1045	F1" - F1"	25	Aut.PA120	4C	Contin.	26,70	550X400X320

With suction hose kit ref. 095-5440-040

090-5148-060	Wall Mec	**60**	230/50	440	F1" - F1"	20	Aut.PA60	3C	Contin.	22,00	550X400X320
090-5148-070	Wall Mec	**70**	230/50	480	F1" - F1"	20	Aut.PA60	3C	Contin.	22,00	550X400X320
090-5148-100	Wall Mec	**100**	230/50	800	F1" - F1"	25	Aut.PA120	4C	Contin.	28,20	550X400X320
090-5148-07X	Wall Mec	**70**	115/60	650	F1" - F1"	20	Aut.PA60	3C	Contin.	23,20	550X400X320
090-5148-10X	Wall Mec	**100**	115/60	1045	F1" - F1"	25	Aut.PA120	4C	Contin.	28,20	550X400X320

WALL DISPENSER FOR DIESEL TRANSFER “Wall Mec”

Diesel transferring kit for private use. It allows the quick and safe filling of the vehicles.

It also permits to measure and record the dispensed quantities.

“Wall Mec” series composed by:

Art. 091-6100-060 Electric pump AC 230V 50Hz MEC-60 l/min
Art. 091-6100-070 Electric pump AC 230V 50Hz MEC-70 l/min
Art. 091-6102-070 Electric pump AC 115V 60Hz MEC-70 l/min

Art. 091-6100-100 Electric pump AC 230V 50Hz MEC-100 l/min
Art. 091-6102-100 Electric pump AC 115V 60Hz MEC-100 l/min

Art. 091-6081-085 12V Pump - power cable(sec. 6 mmq, 4 m lenght) with pincers and fuse - 85 l/min
Art. 091-6083-085 24V Pump- power cable (sec. 6 mmq, 4 m lenght) with pincers and fuse - 85 l/min

Art. 908-0516-060 Connection hose ø 20 mm M-M 1” 6 m lenght
Art. 908-0616-060 Connection hose ø 25 mm M-M 1” 6 m lenght

Art. 093-5210-000 Automatic nozzle PA60 Flow rate 70 l/min
Art. 093-5215-000 Automatic nozzle PA90 Flow rate 90 l/min
Art. 093-5220-000 Automatic nozzle PA120 Flow rate 120 l/min

Art. 092-5103-000 Mechanical flow meter 3 digits F1” 120 l/min 3C
Art. 092-5104-000 Mechanical flow meter 4 digits F1” 120 l/min 4C

Art. 094-5240-000 Water separating delivery filter for diesel 70 l/min
Art. 094-5245-000 Water separating delivery filter for diesel 150 l/min

Art. 095-5440-040 Suction hose kit with valve Ø 25, 4 m lenght

WALL DISPENSER FOR DIESEL TRANSFER “Wall Mec”

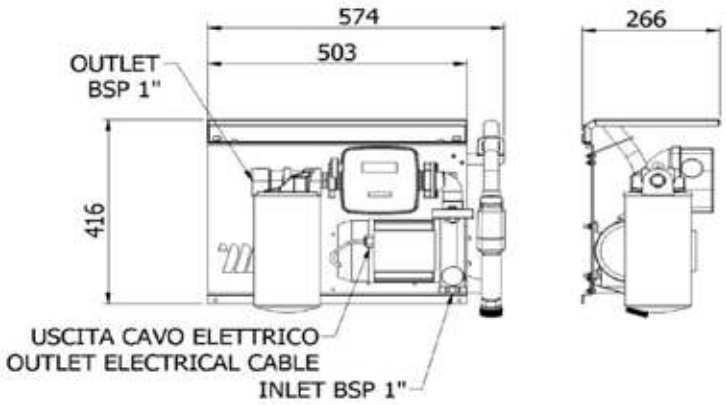

Ref.	Descrip.	Flow rate	Voltage	Power	Inlet-outlet	Conn. hose	Nozzle	Flow meter/ Filter	Duty cycle	Wei-ght	Packaging
		l/min	AC V./Hz DC Volt	W	BSPG	Ø			min	Kg	mm
Without suction hose kit											
090-5049-060	Wall Mec	**60**	230/50	440	F1" - F1"	20	Aut.PA60	3CYES	Contin.	21,70	550X400X320
090-5049-070	Wall Mec	**70**	230/50	480	F1" - F1"	20	Aut.PA60	3CYES	Contin.	21,70	550X400X320
090-5049-100	Wall Mec	**100**	230/50	800	F1" - F1"	25	Aut.PA120	4CYES	Contin.	29,00	550X400X320
090-5049-07X	Wall Mec	**70**	115/60	650	F1" - F1"	20	Aut.PA60	3CYES	Contin.	22,00	550X400X320
090-5049-10X	Wall Mec	**100**	115/60	1045	F1" - F1"	25	Aut.PA120	4CYES	Contin.	29,30	550X400X320
090-5049-Y85	Wall Mec	**85**	12	432	F1" - F1"	20	Aut.PA90	4CYES	30	24,30	550X400X320
090-5049-Z85	Wall Mec	**85**	24	432	F1" - F1"	20	Aut.PA90	4CYES	30	24,30	550X400X320

With suction hose kit Cod. 095-5440-040

090-5149-060	Wall Mec	**60**	230/50	440	F1" - F1"	20	Aut.PA60	3CYES	Contin.	23,20	550X400X320
090-5149-070	Wall Mec	**70**	230/50	480	F1" - F1"	20	Aut.PA60	3CYES	Contin.	23,20	550X400X320
090-5149-100	Wall Mec	**100**	230/50	800	F1" - F1"	25	Aut.PA120	4CYES	Contin.	30,50	550X400X320
090-5149-07X	Wall Mec	**70**	115/60	650	F1" - F1"	20	Aut.PA60	3CYES	Contin.	23,50	550X400X320
090-5149-10X	Wall Mec	**100**	115/60	1045	F1" - F1"	25	Aut.PA120	4CYES	Contin.	30,80	550X400X320
090-5149-Y85	Wall Mec	**85**	12	432	F1" - F1"	20	Aut.PA90	4CYES	30	25,80	550X400X320
090-5149-Z85	Wall Mec	**85**	24	432	F1" - F1"	20	Aut.PA90	4CYES	30	25,80	550X400X320

WALL DISPENSER FOR DIESEL TRANSFER “Wall Mec”

Diesel transferring kit for private use. It allows the quick and safe filling of the vehicles.

It also permits to measure and record the dispensed quantities.

“Wall Mec” series composed by:

Art. 091-6100-060 Electric pump AC 230V 50Hz MEC-60 l/min

Art. 091-6100-070 Electric pump AC 230V 50Hz MEC-70 l/min
Art. 091-6102-070 Electric pump AC 115V 60Hz 70 l/min

Art. 091-6100-100 Electric pump AC 230V 50Hz MEC-100 l/min
Art. 091-6102-100 Electric pump AC 115V 60Hz 100 l/min

Art. 908-0516-060 Connection hose ø 20 mm M-M 1” 6 m lenght
Art. 908-0616-060 Connection hose ø 25 mm M-M 1” 6 m lenght

Art. 093-5210-000 Automatic nozzle PA60 Flow rate 70 l/min
Art. 093-5220-000 Automatic nozzle PA120 Flow rate 120 l/min

Art. 092-5130-000 Digital flow meter with gears MGE-110

Art. 095-5440-040 Suction hose kit with valve Ø 25, 4 m lenght

WALL DISPENSER FOR DIESEL TRANSFER “Wall Mec”

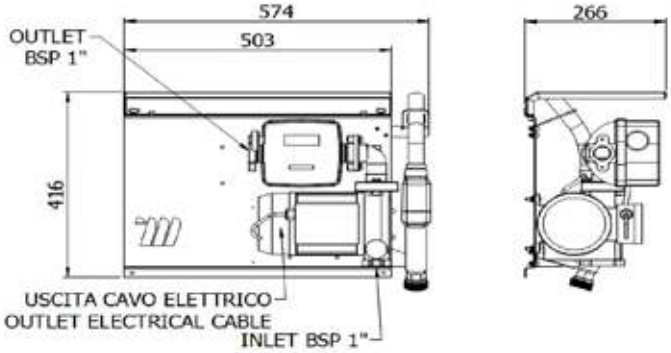

Ref.	Descrip.	Flow rate	Voltage	Power	Inlet-outlet	Conn. hose	Nozzle	Flow meter	Duty cycle	Wei-ght	Packaging
		l/min	AC V./Hz	W	BSPG	Ø			min	Kg	mm

Without suction hose kit

090-5248-060	Wall Mec	**60**	230/50	440	F1" - F1"	20	Aut.PA60	110	Contin.	19,50	550X400X320
090-5248-070	Wall Mec	**70**	230/50	480	F1" - F1"	20	Aut.PA60	110	Contin.	19,50	550X400X320
090-5248-100	Wall Mec	**100**	230/50	800	F1" - F1"	25	Aut.PA120	110	Contin.	25,70	550X400X320
090-5248-07X	Wall Mec	**70**	115/60	650	F1" - F1"	20	Aut.PA60	110	Contin.	20,70	550X400X320
090-5248-10X	Wall Mec	**100**	115/60	1045	F1" - F1"	25	Aut.PA120	110	Contin.	25,70	550X400X320

With suction hose kit ref. 095-5440-040

090-5348-060	Wall Mec	**60**	230/50	440	F1" - F1"	20	Aut.PA60	110	Contin.	21,00	550X400X320
090-5348-070	Wall Mec	**70**	230/50	480	F1" - F1"	20	Aut.PA60	110	Contin.	21,00	550X400X320
090-5348-100	Wall Mec	**100**	230/50	800	F1" - F1"	25	Aut.PA120	110	Contin.	27,20	550X400X320
090-5348-07X	Wall Mec	**70**	115/60	650	F1" - F1"	20	Aut.PA60	110	Contin.	22,20	550X400X320
090-5348-10X	Wall Mec	**100**	115/60	1045	F1" - F1"	25	Aut.PA120	110	Contin.	27,20	550X400X320

WALL DISPENSER FOR DIESEL TRANSFER “Wall Mec”

Diesel transferring kit for private use. It allows the quick and safe filling of the vehicles.

It also permits to measure and record the dispensed quantities.

“Wall Mec” series composed by:

Art. 091-6100-060 Electric pump AC 230V 50Hz MEC-60 l/min
Art. 091-6100-070 Electric pump AC 230V 50Hz MEC-70 l/min
Art. 091-6102-070 Electric pump AC 115V 60Hz MEC-70 l/min

Art. 091-6100-100 Electric pump AC 230V 50Hz MEC-100 l/min
Art. 091-6102-100 Electric pump AC 115V 60Hz MEC-100 l/min

Art. 908-0516-060 Connection hose ø 20 mm M-M 1” 6 m lenght
Art. 908-0616-060 Connection hose ø 25 mm M-M 1” 6 m lenght

Art. 093-5210-000 Automatic nozzle PA60 Flow rate 70 l/min
Art. 093-5220-000 Automatic nozzle PA120 Flow rate 120 l/min

Art. 092-5130-000 Digital flow meter with gears MGE-110
min-max flow rate 5-110 l/min

Art. 094-5240-000 Water separating delivery filter for diesel 70 l/min
Art. 094-5245-000 Water separating delivery filter for diesel 150 l/min

Art. 095-5440-040 Suction hose kit with valve Ø 25, 4 m lenght

WALL DISPENSER FOR DIESEL TRANSFER “Wall Mec”

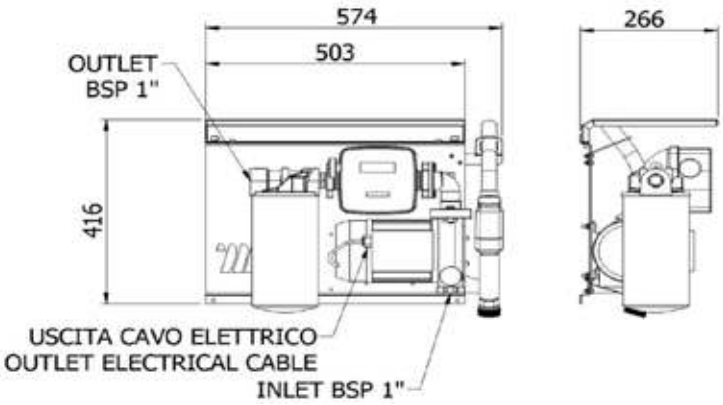

Ref.	Descrip.	Flow rate	Voltage	Power	Inlet-outlet	Conn. hose	Nozzle	Flow meter/ Filter	Duty cycle	Wei-ght	Packaging
		l/min	AC V./Hz	W	BSPG	Ø			min	Kg	mm

Without suction hose kit

090-5249-060	Wall Mec	**60**	230/50	440	F1" - F1"	20	Aut.PA60	YES 110	Contin.	20,70	550X400X320
090-5249-070	Wall Mec	**70**	230/50	480	F1" - F1"	20	Aut.PA60	YES 110	Contin.	20,70	550X400X320
090-5249-100	Wall Mec	**100**	230/50	800	F1" - F1"	25	Aut.PA120	YES 110	Contin.	28,00	550X400X320
090-5249-07X	Wall Mec	**70**	115/60	650	F1" - F1"	20	Aut.PA60	YES 110	Contin.	21,00	550X400X320
090-5249-10X	Wall Mec	**100**	115/60	1045	F1" - F1"	25	Aut.PA120	YES 110	Contin.	28,30	550X400X320

With suction hose kit Cod. 095-5440-040

090-5349-060	Wall Mec	**60**	230/50	440	F1" - F1"	20	Aut.PA60	YES 110	Contin.	22,20	550X400X320
090-5349-070	Wall Mec	**70**	230/50	480	F1" - F1"	20	Aut.PA60	YES 110	Contin.	22,20	550X400X320
090-5349-100	Wall Mec	**100**	230/50	800	F1" - F1"	25	Aut.PA120	YES 110	Contin.	29,50	550X400X320
090-5349-07X	Wall Mec	**70**	115/60	650	F1" - F1"	20	Aut.PA60	YES 110	Contin.	22,50	550X400X320
090-5349-10X	Wall Mec	**100**	115/60	1045	F1" - F1"	25	Aut.PA120	YES 110	Contin.	29,80	550X400X320

CABINET DISPENSER FOR DIESEL TRANSFER “Meclube box”

Solid cabinet in anti-corrosion painted steel complete with key lock. The pump is inside the cabinet with anti-vibration supports. It is equipped with nozzle holder, microswitch to turn it on/off, automatic nozzle with swiveling joint, flow meter, water separating, emergency button.
Diesel transfer system for private usage, it allows the quick and safe filling of vehicles, and permits to measure and record the dispensed quantities.

“Meclube Box” series composed by:

Art. 091-6100-060 Electric pump AC 230V 50Hz MEC-60 l/min
Art. 091-6100-070 Electric pump AC 230V 50Hz MEC-70 l/min
Art. 091-6102-070 Electric pump AC 115V 60Hz MEC-70 l/min

Art. 091-6100-100 Electric pump AC 230V 50Hz MEC-100 l/min
Art. 091-6102-100 Electric pump AC 115V 60Hz MEC-100 l/min

Art. 908-0516-060 Connection hose ø 20 mm M-M 1” 6 m lenght
Art. 908-0616-060 Connection hose ø 25 mm M-M 1” 6 m lenght

Art. 093-5210-000 Automatic nozzle PA60 Flow rate 70 l/min
Art. 093-5220-000 Automatic nozzle PA120 Flow rate 120 l/min

Art. 092-5103-000 Mechanical flow meter 3 digits F1” 120 l/min 3C
Art. 092-5104-000 Mechanical flow meter 4 digits F1” 120 l/min 4C

Art. 094-5240-000 Water separating delivery filter for diesel 70 l/min
Art. 094-5245-000 Water separating delivery filter for diesel 150 l/min

Art. 090-5056-000 Cabinet

OPTIONAL:

Suction hose kit

CABINET DISPENSER FOR DIESEL TRANSFER “Meclube Box”

Ref.	Descrip.	Flow rate	Voltage	Power	Inlet-Outlet	Conn. hose	Nozzle	Flow meter/ Filter	Duty cycle	Wei-ght	Packaging
		l/min	AC V./Hz	W	BSPG	Ø			min	Kg	mm
090-5050-060	Meclube box	**60**	230/50	440	F1" - F1"	20	Aut.PA60	3C YES	Contin.	37,30	615X375X605
090-5050-070	Meclube box	**70**	230/50	480	F1" - F1"	20	Aut.PA60	3C YES	Contin.	37,30	615X375X605
090-5050-100	Meclube box	**100**	230/50	800	F1" - F1"	25	Aut.PA120	4C YES	Contin.	47,35	615X375X605
090-5050-07X	Meclube box	**70**	115/60	650	F1" - F1"	20	Aut.PA60	3C YES	Contin.	37,30	615X375X605
090-5050-10X	Meclube box	**100**	115/60	1045	F1" - F1"	25	Aut.PA120	4C YES	Contin.	47,35	615X375X605

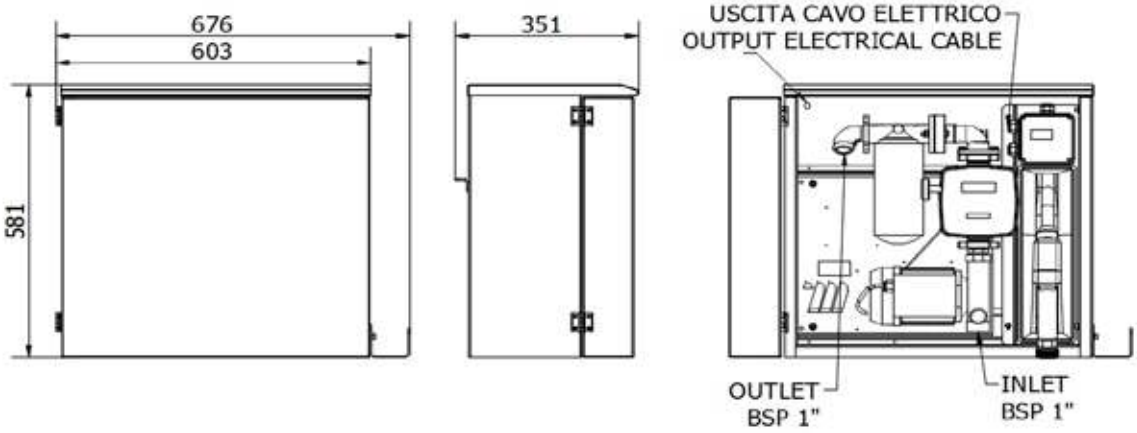

CABINET DISPENSER FOR DIESEL TRANSFER “Meclube box”

Solid cabinet in anti-corrosion painted steel complete with key lock. The pump is inside the cabinet with anti-vibration supports.It is equipped with automatic nozzle with swiveling joint, flow meter, water separating, emergency button.

Diesel transfer system for private usage, it allows the quick and safe filling of vehicles, and permits to measure and record the dispensed quantities.

“Meclube Box” series composed by:

Art. 091-6100-060 Electric pump AC 230V 50Hz MEC-60 l/min
Art. 091-6100-070 Electric pump AC 230V 50Hz MEC-70 l/min
Art. 091-6102-070 Electric pump AC 115V 60Hz MEC-70 l/min

Art. 091-6100-100 Electric pump AC 230V 50Hz MEC-100 l/min
Art. 091-6102-100 Electric pump AC 115V 60Hz MEC-100 l/min

Art. 908-0516-060 Connection hose ø 20 mm M-M 1” 6 m lenght
Art. 908-0616-060 Connection hose ø 25 mm M-M 1” 6 m lenght

Art. 093-5210-000 Automatic nozzle PA60 Flow rate 70 l/min
Art. 093-5220-000 Automatic nozzle PA120 Flow rate 120 l/min

Art. 092-5103-000 Mechanical flow meter 3 digits F1” 120 l/min 3C
Art. 092-5104-000 Mechanical flow meter 4 digits F1” 120 l/min 4C

Art. 094-5240-000 Water separating delivery filter for diesel 70 l/min
Art. 094-5245-000 Water separating delivery filter for diesel 150 l/min

Art. 090-5056-000 Cabinet

OPTIONAL:

Suction hose kit

CABINET DISPENSER FOR DIESEL TRANSFER “Meclube Box”

Ref.	Descrip.	Flow rate	Voltage	Power	Inlet-Outlet	Conn. hose	Nozzle	Flow meter/ Filter	Duty cycle	Wei-ght	Packaging
		l/min	AC V./Hz	W	BSPG	Ø			min	Kg	mm
090-5051-060	Meclube box	**60**	230/50	440	F1" - F1"	20	Aut.PA60	3C YES	Contin.	36,00	615X375X605
090-5051-070	Meclube box	**70**	230/50	480	F1" - F1"	20	Aut.PA60	3C YES	Contin.	37,00	615X375X605
090-5051-100	Meclube box	**100**	230/50	800	F1" - F1"	25	Aut.PA120	4C YES	Contin.	45,00	615X375X605
090-5051-07X	Meclube box	**70**	115/60	650	F1" - F1"	20	Aut.PA60	3C YES	Contin.	37,00	615X375X605
090-5051-10X	Meclube box	**100**	115/60	1045	F1" - F1"	25	Aut.PA120	4C YES	Contin.	45,00	615X375X605

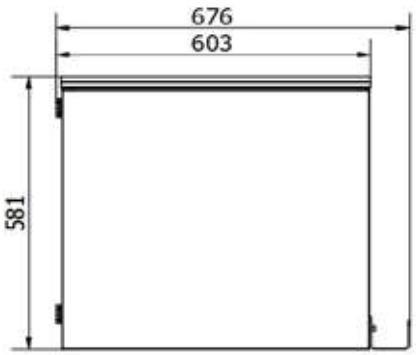

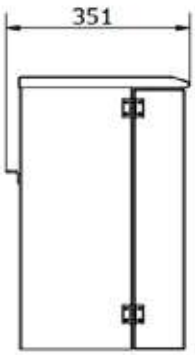

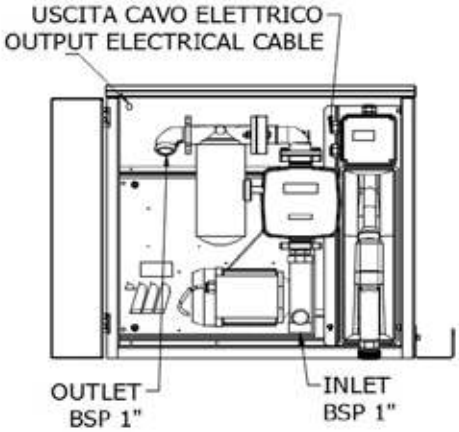

CABINET DISPENSER FOR DIESEL TRANSFER “Meclube box”

Solid cabinet in anti-corrosion painted steel complete with key lock. The pump is inside the cabinet with anti-vibration supports. It is equipped with automatic nozzle with swiveling joint, flow meter, water separating.

Diesel transfer system for private usage, it allows the quick and safe filling of vehicles, and permits to measure and record the dispensed quantities.

“Meclube Box” series composed by:

Art. 091-6100-060 Electric pump AC 230V 50Hz MEC-60 l/min
Art. 091-6100-070 Electric pump AC 230V 50Hz MEC-70 l/min
Art. 091-6102-070 Electric pump AC 115V 60Hz MEC-70 l/min

Art. 091-6100-100 Electric pump AC 230V 50Hz MEC-100 l/min
Art. 091-6102-100 Electric pump AC 115V 60Hz MEC-100 l/min

Art. 908-0516-060 Connection hose ø 20 mm M-M 1” 6 m lenght
Art. 908-0616-060 Connection hose ø 25 mm M-M 1” 6 m lenght

Art. 093-5210-000 Automatic nozzle PA60 Flow rate 70 l/min
Art. 093-5220-000 Automatic nozzle PA120 Flow rate 120 l/min

Art. 092-5103-000 Mechanical flow meter 3 digits F1” 120 l/min 3C
Art. 092-5104-000 Mechanical flow meter 4 digits F1” 120 l/min 4C

Art. 094-5240-000 Water separating delivery filter for diesel 70 l/min
Art. 094-5245-000 Water separating delivery filter for diesel 150 l/min

Art. 090-5056-000 Cabinet

OPTIONAL:

Suction hose kit

CABINET DISPENSER FOR DIESEL TRANSFER “Meclube Box”

Ref.	Descrip.	Flow rate	Voltage	Power	Inlet-Outlet	Conn. hose	Nozzle	Flow meter/ Filter	Duty cycle	Wei-ght	Packaging
		l/min	AC V./Hz	W	BSPG	Ø			min	Kg	mm
090-5052-060	Meclube box	**60**	230/50	440	F1" - F1"	20	Aut.PA60	3C YES	Contin.	35,30	615X375X605
090-5052-070	Meclube box	**70**	230/50	480	F1" - F1"	20	Aut.PA60	3C YES	Contin.	35,30	615X375X605
090-5052-100	Meclube box	**100**	230/50	800	F1" - F1"	25	Aut.PA120	4C YES	Contin.	43,90	615X375X605
090-5052-07X	Meclube box	**70**	115/60	650	F1" - F1"	20	Aut.PA60	3C YES	Contin.	35,30	615X375X605
090-5052-10X	Meclube box	**100**	115/60	1045	F1" - F1"	25	Aut.PA120	4C YES	Contin.	43,90	615X375X605

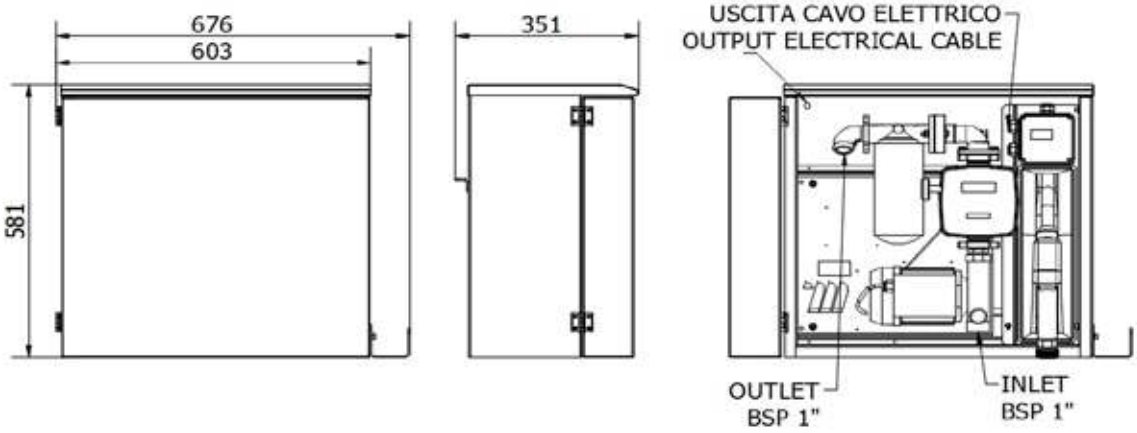

CABINET DISPENSER FOR DIESEL TRANSFER “Meclube box”

Solid cabinet in anti-corrosion painted steel complete with key lock. The pump is inside the cabinet with anti-vibration supports. It is equipped with automatic nozzle with swiveling joint, flow meter, water separating.

Diesel transfer system for private usage, it allows the quick and safe filling of vehicles, and permits to measure and record the dispensed quantities.

“Meclube Box” series composed by:

Art. 091-5081-060 12V Pump- power cable (sec. 4 mmq, 4 m lenght) with pincers and fuse - 60 l/min

Art. 091-5083-060 24V Pump- power cable (sec. 4 mmq, 4 m lenght) with pincers and fuse - 60 l/min

Art. 091-6081-085 12 V Pump- power cable (sec. 6 mmq, 4 m lenght) with pincers and fuse - 85 l/min

Art. 091-6083-085 24 V Pump- power cable (sec. 6 mmq, 4 m lenght) with pincers and fuse - 85 l/min

Art. 908-0516-060 Connection hose ø 20 mm M-M 1” 6 m lenght

Art. 093-5210-000 Automatic nozzle PA60 Flow rate 70 l/min

Art. 093-5215-000 Automatic nozzle PA90 Flow rate 90 l/min

Art. 092-5103-000 Mechanical flow meter 3 digits F1” 120 l/min 3C

Art. 092-5104-000 Mechanical flow meter 4 digits F1” 120 l/min 4C

Art. 094-5240-000 Water separating delivery filter for diesel 70 l/min

Art. 094-5245-000 Water separating delivery filter for diesel 150 l/min

Art. 090-5056-000 Cabinet

OPTIONAL:

Suction hose kit

CABINET DISPENSER FOR DIESEL TRANSFER “Meclube Box”

Ref.	Descrip.	Flow rate	Voltage	Power	Inlet-Outlet	Conn. hose	Nozzle	Flow meter/ Filter	Duty cycle	Wei-ght	Packaging
		l/min	DC Volt	W	BSPG	Ø			min	Kg	mm
090-5054-060	Meclube box	**60**	12	336	F1" - F1"	20	Aut.PA60	3C YES	40	33,40	615X375X605
090-5054-085	Meclube box	**85**	12	432	F1" - F1"	20	Aut.PA90	4C YES	30	38,10	615X375X605
090-5055-060	Meclube box	**60**	24	432	F1" - F1"	20	Aut.PA60	3C YES	40	33,40	615X375X605
090-5055-085	Meclube box	**85**	24	432	F1" - F1"	20	Aut.PA90	4C YES	30	38,10	615X375X605

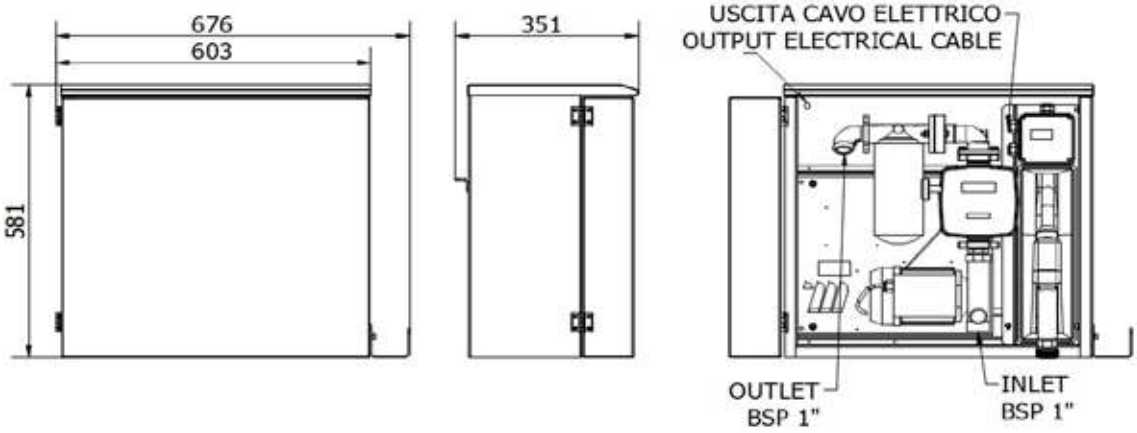

“Mec-Reel” DISTRIBUTOR

The Mec-Reel manufactured by Meclube is a dispatching group composed by an automatic hose reel with 15 m hose, pump with continuous power, water filter in suction and automatic nozzle, all components are integrated in a strong support. The Mec-Reel can be easily installed due to its compactness and versatility. It is the perfect solution to complete tanks or for mobile units.

“Mec-Reel” series composed by:

Art. 091-5081-060 12V Pump - power cable (sec. 4 mmq. m 4 lenght) with pincers and fuse - 60 l/min
Art. 091-5083-060 24V Pump - power cable (sec. 4 mmq. m 4 lenght) with pincers and fuse - 60 l/min

Art. 091-6100-060 Electric pump AC 230V 50Hz MEC-60 l/min
Art. 091-6100-070 Electric pump AC 230V 50Hz MEC-70 l/min
Art. 091-6102-070 Electric pump AC 115V 60Hz MEC-70 l/min

Art. 070-1408-515 Automatic fixed diesel hose reel 10 bar
Hose lenght 15 m - Ø hose 3/4” - Inlet/Outlet G 1”

Art. 093-5210-000 Automatic nozzle PA60 Flow rate 70 l/min

Art. 094-5240-000 Water separating delivery filter for diesel 70 l/min

“Mec-Reel” DISTRIBUTOR

Ref.	Description	Flow rate	Voltage	Power	Inlet	Hose Reel	Nozzle	Filter	Weight	Packaging
		l/min	AC V./Hz DC Volt	W	BSPG				Kg	mm
090-5060-060	Mec-Reel	**60**	230/50	440	F1"	Ø 3/4”-15 m	Aut.PA60	70 l/min	57,50	475x670x840
090-5060-070	Mec-Reel	**75**	230/50	480	F1"	Ø 3/4”-15 m	Aut.PA60	70 l/min	58,50	475x670x840
090-5060-07X	Mec-Reel	**75**	115/60	650	F1"	Ø 3/4”-15 m	Aut.PA60	70 l/min	58,50	475x670x840
090-5060-Y60	Mec-Reel	**60**	12	336	F1"	Ø 3/4”-15 m	Aut.PA60	70 l/min	57,50	475x670x840
090-5060-Z60	Mec-Reel	**60**	24	432	F1"	Ø 3/4”-15 m	Aut.PA60	70 l/min	57,50	475x670x840

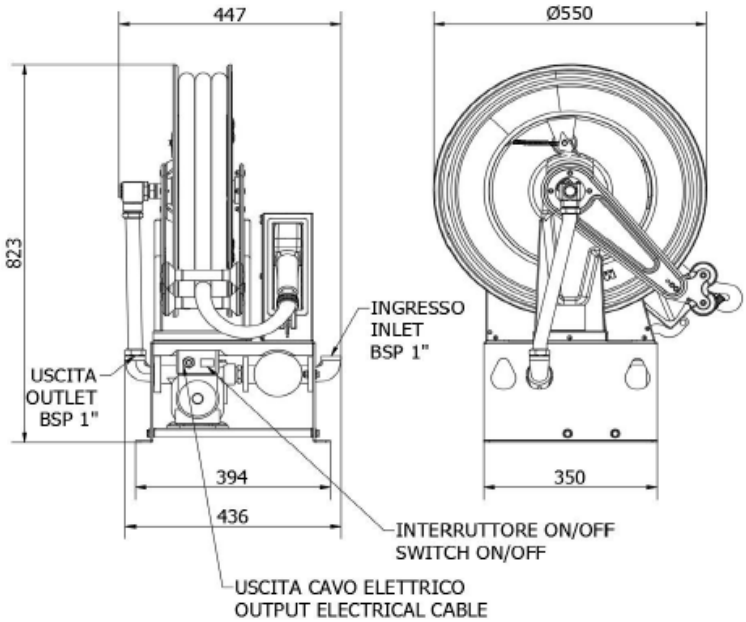

“Mec-Reel” DISTRIBUTOR

The Mec-Reel manufactured by Meclube is a dispatching group composed by an automatic hose reel with 15 m hose, pump with continuous power, water filter in suction and automatic nozzle, all components are integrated in a strong support. The Mec-Reel can be easily installed due to its compactness and versatility. It is the perfect solution to complete tanks or for mobile units.

“Mec-Reel” series composed by:

Art. 091-6081-085 12V Pump - power cable(sec. 6 mmq, 4 m lenght) with pincers and fuse - 85 l/min
Art. 091-6083-085 24V Pump- power cable (sec. 6 mmq, 4 m lenght) with pincers and fuse - 85 l/min

Art. 091-6100-100 Electric pump AC 230V 50Hz MEC-100 l/min
Art. 091-6102-100 Electric pump AC 115V 60Hz MEC-100 l/min

Art. 070-1508-615 Automatic fixed diesel hose reel 10 bar
Hose lenght 15 m - Ø hose 1” - Inlet/Outlet G 1”

Art. 093-5215-000 Automatic nozzle PA90 Flow rate 90 l/min
Art. 093-5220-000 Automatic nozzle PA120 Flow rate 120 l/min

Art. 094-5245-000 Water separating delivery filter for diesel 150 l/min

Art. 092-5130-000 Digital flow meter with gears MGE-11 min-max flow rate 5-110 l/min

“Mec-Reel” DISTRIBUTOR

Ref.	Descrip-tion	Flow rate	Voltage	Power	Inlet	Hose Reel	Nozzle	Filter	flow meter	Wei-ght	Packaging
		l/min	AC V./Hz DC Volt	W	BSPG					Kg	mm
090-5060-Y85	Mec-Reel	**85**	12	432	F1"	Ø 1”-15 m	Aut.PA90	150 l/min	NO	68,30	530x660x860
090-5060-Z85	Mec-Reel	**85**	24	432	F1"	Ø 1”-15 m	Aut.PA90	150 l/min	NO	68,30	530x660x860
090-5060-100	Mec-Reel	**100**	230/50	800	F1"	Ø 1”-15 m	Aut.PA120	150 l/min	NO	71,90	530x660x860
090-5060-10X	Mec-Reel	**100**	115/60	1045	F1"	Ø 1”-15 m	Aut.PA120	150 l/min	NO	71,90	530x660x860
090-5062-Y85	Mec-Reel	**85**	12	432	F1"	Ø 1”-15 m	Aut.PA90	150 l/min	YES	70,30	530x660x860
090-5062-Z85	Mec-Reel	**85**	24	432	F1"	Ø 1”-15 m	Aut.PA90	150 l/min	YES	70,30	530x660x860
090-5062-100	Mec-Reel	**100**	230/50	800	F1"	Ø 1”-15 m	Aut.PA120	150 l/min	YES	73,40	530x660x860
090-5062-10X	Mec-Reel	**100**	115/60	1045	F1"	Ø 1”-15 m	Aut.PA120	150 l/min	YES	73,40	530x660x860

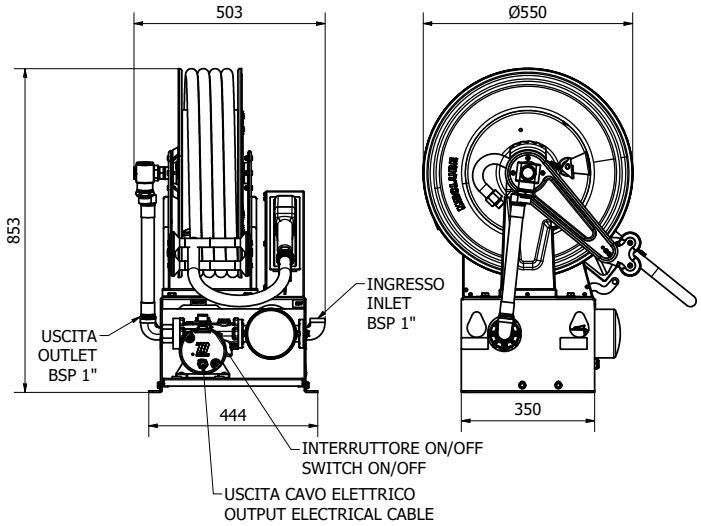

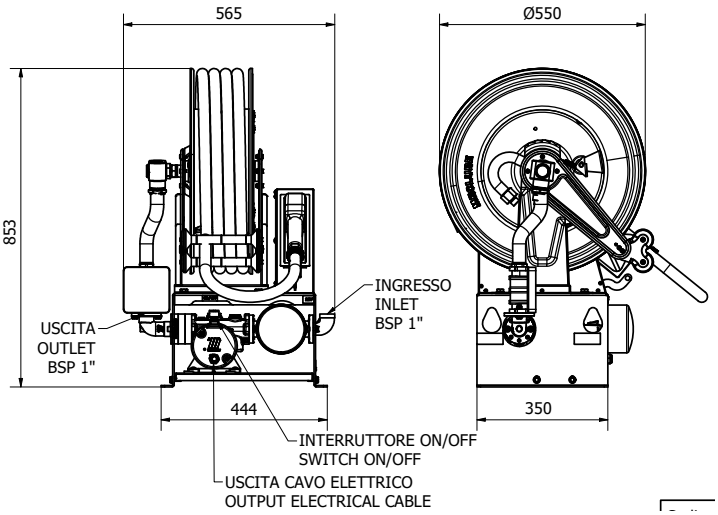

PORTABLE DISPENSER GROUP ”Double-Pump”

Double-Pump is a portable dispensing unit for high-flow diesel transfer.
It is the ideal solution for users who need to transfer diesel at a high flow rate.
Its use is especially indicated on construction sites, in agricultural contexts where machinery cannot be refueled directly from the fuel column.
The diesel dispenser has a continuous duty cycle and a noise level of 70 dB

Ref.	Flow rate	Voltage	Power	Electricity	RPM	Cable lenght	Inlet-outlet	Duty cycle	Weight	Packaging
	l/min	AC V./Hz	W	A	rev. min	m	BSPG	min	kg	mm
PORTABLE DISPENSER GROUP										
090-6030-200	**200**	230/50	1600	7,6	1450	2	F1.1/2"-1.1/2"	Contin.	56,00	640X590X610
090-6031-200	**200**	230/60	1900	10,4	1745	2	F1.1/2”-1.1/2”	Contin.	56,00	640X590X610
090-6032-200	**200**	115/60	2090	19,6	1750	2	F1.1/2”-1.1/2”	Contin.	56,00	640X590X610

Dimensions:

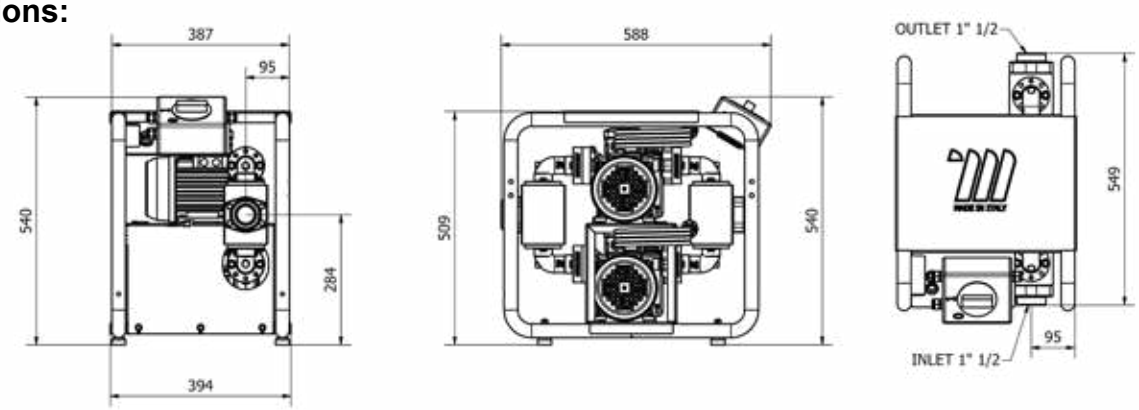

TROLLEY-MOUNTED DISPENSER GROUP ”Double-Pump”

Double-Pump is a trolley-mounted dispensing unit for high-flow diesel transfer.
It is the ideal solution for users who need to transfer diesel at a high flow rate.
Its use is especially indicated on construction sites, in agricultural contexts where machinery cannot be refueled directly from the fuel column.
The diesel dispenser has a continuous duty cycle and a noise level of 70 dB

Ref.	Flow rate	Voltage	Power	Electricity	RPM	Cable lenght	Inlet-outlet	Duty cycle	Weight	Packaging
	l/min	AC V./Hz	W	A	rev. min	m	BSPG	min	kg	mm
TROLLEY-MOUNTED DISPENSER GROUP										
090-6040-200	**200**	230/50	1600	7,6	1450	2	F1.1/2"-1.1/2"	Contin.	60,60	640X590X610
090-6041-200	**200**	230/60	1900	10,4	1745	2	F1.1/2”-1.1/2”	Contin.	60,60	640X590X610
090-6042-200	**200**	115/60	2090	19,6	1750	2	F1.1/2”-1.1/2”	Contin.	60,60	640X590X610

Dimensions:

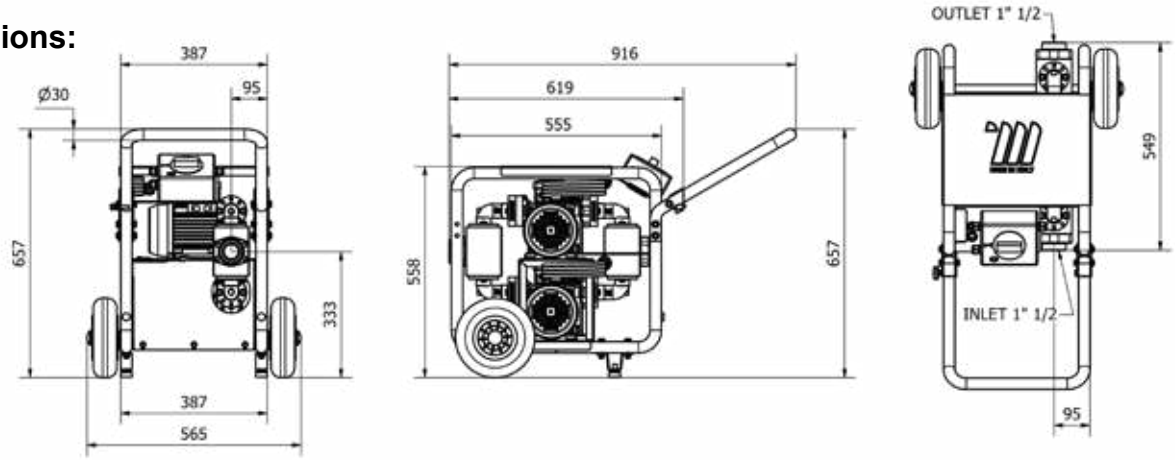

DIESEL TRANSFER SYSTEM “Cami Dispenser”

Diesel transfer system for private usage, it allows the quick and safe filling of vehicles, and permits to measure and record the dispensed quantities. It is equipped with nozzle holder, microswitch to turn the pump on/off, automatic nozzle with swiveling joint, and extractable hose support. The equipment can be fixed to the wall, to a tank or to its own support column.

“Cami Dispenser” series composed by:

Art. 091-5081-060 12V Pump - power cable (sec. 4 mmq, 4 m lenght) with pincers and fuse- 60 l/min
Art. 091-5083-060 24V Pump - power cable (sec. 4 mmq, 4 m lenght) with pincers and use carrier - 60 l/min

Art. 091-6100-060 Electric pump AC 230V 50Hz MEC-60 l/min
Art. 091-6100-070 Electric pump AC 230V 50Hz MEC-70 l/min
Art. 091-6102-070 Electric pump AC 115V 60Hz MEC-70 l/min

Art. 091-6100-100 Electric pump AC 230V 50Hz MEC-100 l/min
Art. 091-6102-100 Electric pump AC 115V 60Hz MEC-100 l/min

Art. 908-0516-040 Connection hose ø 20 mm M-M 1” 4 m lenght
Art. 908-0616-040 Connection hose ø 25 mm M-M 1” 4 m lenght

Art. 093-5210-000 Automatic nozzle PA60 Flow rate 70 l/min
Art. 093-5220-000 Automatic nozzle PA120 Flow rate 120 l/min

Art. 092-5103-000 Mechanical flow meter 3 digits F1” 120 l/min - 3C
Art. 092-5104-000 Mechanical flow meter 4 digits F1” 120 l/min - 4C

OPTIONAL:

Art. 090-5072-000 Support column Cami-Dispenser

Art. 094-5240-000 Water separating delivery filter for diesel 70 l/min
Art. 094-5245-000 Water separating delivery filter for diesel 150 l/min

DIESEL TRANSFER SYSTEM "Cami Dispenser"

Ref.	Descrip.	Flow rate	Voltage	Power	Inlet-Outlet	Conn. hose	Nozzle	Flow meter	Duty cycle	Wei-ght	Packaging
		l/min	AC V./Hz DC Volt	W	BSPG	Ø			min	Kg	mm
090-5070-060	Cami Dispenser	**60**	230/50	440	F1" - F1"	20	Aut.PA60	3C	Contin.	26,00	505X355X425
090-5070-070	Cami Dispenser	**70**	230/50	480	F1" - F1"	20	Aut.PA60	3C	Contin.	27,00	505X355X425
090-5070-100	Cami Dispenser	**100**	230/50	800	F1" - F1"	25	Aut.PA120	4C	Contin.	33,00	505X355X425
090-5070-07X	Cami Dispenser	**70**	115/60	650	F1" - F1"	20	Aut.PA60	3C	Contin.	27,00	505X355X425
090-5070-10X	Cami Dispenser	**100**	115/60	1045	F1" - F1"	25	Aut.PA120	4C	Contin.	33,00	505X355X425
090-5070-Y60	Cami Dispenser	**60**	12	336	F1" - F1"	20	Aut.PA60	3C	40	26,00	505X355X425
090-5070-Z60	Cami Dispenser	**60**	24	432	F1" - F1"	20	Aut.PA60	3C	40	26,00	505X355X425

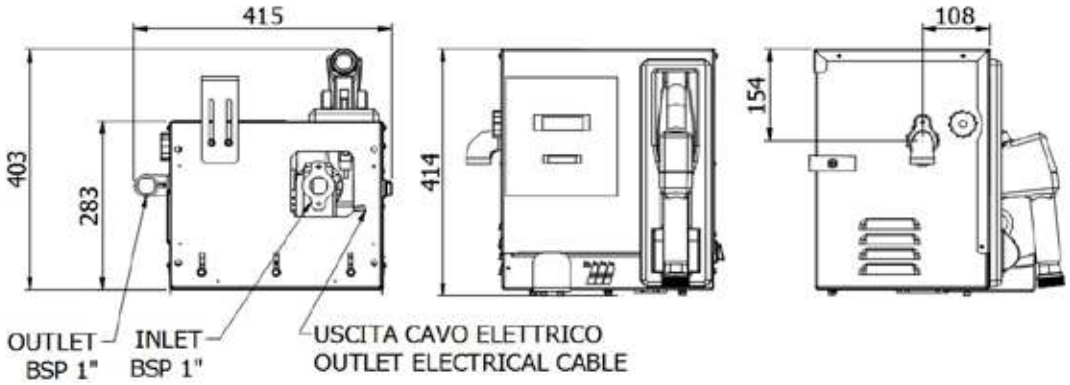

DIESEL TRANSFER SYSTEM "Cami Dispenser"

Diesel transfer system for private usage, it allows the quick and safe filling of vehicles, and permits to measure and record the dispensed quantities. It is equipped with nozzle holder, microswitch to turn the pump on/off, automatic nozzle with swiveling joint, and extractable hose support. The equipment can be fixed to the ground.

"Cami Dispenser" series composed by:

Art. 091-5081-060 12V Pump - power cable (sec. 4 mmq, 4 m lenght) with pincers and fuse - 60 l/min
Art. 091-5083-060 24V Pump - power cable (sec. 4 mmq, 4 m lenght) with pincers and fuse - 60 l/min

Art. 091-6100-060 Electric pump AC 230V 50Hz MEC-60 l/min
Art. 091-6100-070 Electric pump AC 230V 50Hz MEC-70 l/min
Art. 091-6102-070 Electric pump 115V 60Hz 70 l/min

Art. 091-6100-100 Electric pump AC 230V 50Hz MEC-100 l/min
Art. 091-6102-100 Electric pump 115V 60Hz 100 l/min

Art. 908-0516-040 Connection hose ø 20 mm M-M 1" 4 m lenght
Art. 908-0616-040 Connection hose ø 25 mm M-M 1" 4 m lenght

Art. 093-5210-000 Automatic nozzle PA60 Flow rate 70 l/min
Art. 093-5220-000 Automatic nozzle PA120 Flow rate 120 l/min

Art. 092-5103-000 Mechanical flow meter 3 digits F1" 120 l/min - 3C
Art. 092-5104-000 Mechanical flow meter 4 digits F1" 120 l/min - 4C

OPTIONAL:

Art. 094-5240-000 Water separating delivery filter for diesel 70 l/min
Art. 094-5245-000 Water separating delivery filter for diesel 150 l/min

DIESEL TRANSFER SYSTEM “Cami Dispenser”

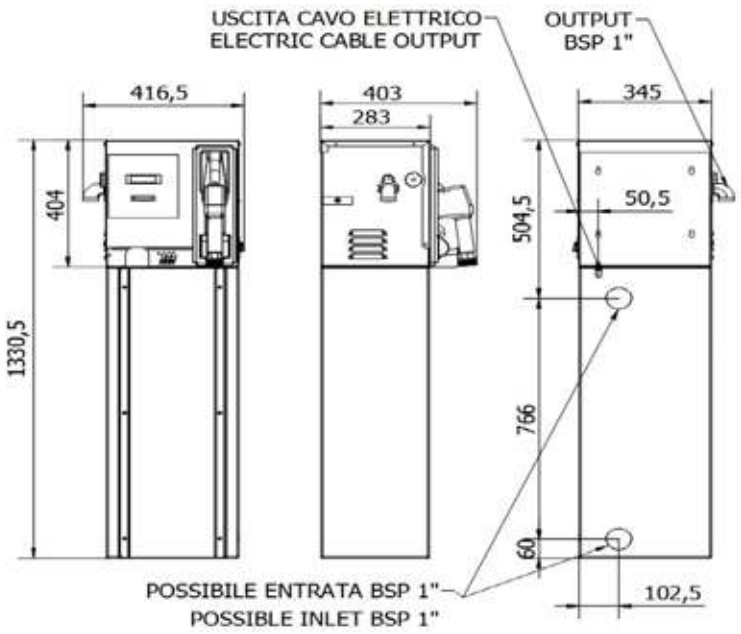

Ref.	Descrip.	Flow rate	Voltage	Power	Inlet-Outlet	Conn. hose	Nozzle	Flow meter	Duty cycle	Weight
		l/min	AC V./Hz DC Volt	W	BSPG	Ø			min	Kg
090-5072-060	Cami Dispenser	**60**	230/50	440	F1" - F1"	20	Aut.PA60	3C	Contin.	49,50
090-5072-070	Cami Dispenser	**70**	230/50	480	F1" - F1"	20	Aut.PA60	3C	Contin.	50,50
090-5072-100	Cami Dispenser	**100**	230/50	800	F1" - F1"	25	Aut.PA120	4C	Contin.	56,50
090-5072-07X	Cami Dispenser	**70**	115/60	650	F1" - F1"	20	Aut.PA60	3C	Contin.	50,50
090-5072-10X	Cami Dispenser	**100**	115/60	1045	F1" - F1"	25	Aut.PA120	4C	Contin.	56,50
090-5072-Y60	Cami Dispenser	**60**	12	336	F1" - F1"	20	Aut.PA60	3C	40	49,50
090-5072-Z60	Cami Dispenser	**60**	24	432	F1" - F1"	20	Aut.PA60	3C	40	49,50

Ref.	Packaging (mm)	NR. of boxes
090-5072-060	505X355X425 - 365X305X945	2
090-5072-070	505X355X425 - 365X305X945	2
090-5072-100	505X355X425 - 365X305X945	2
090-5072-07X	505X355X425 - 365X305X945	2
090-5072-10X	505X355X425 - 365X305X945	2

Ref.	Packaging (mm)	NR. of boxes
090-5072-Y60	505X355X425 - 365X305X945	2
090-5072-Z60	505X355X425 - 365X305X945	2

DIESEL TRANSFER SYSTEM “Electronic Cami Dispenser”

Diesel transferring kit in solid structure for private use. It allows the quick and clean filling of the vehicles. It permits the following functions: the identification of the authorised users, the pre-selection of dispensed quantitty, the detection of the total consumption and the single-user consumption, the storage of the deliveries and the management of 200 users. The system is equipped with key-manager to start the delivery quickly. The system includes the nozzle holder with microswitch to turn the pump on/off, automatic nozzle with swiveling joint and side hose holder. The equipment can be fixed to the wall, to a tank or to its own support column.

“Electronic Cami Dispenser” series composed by:

Art. 091-6100-060 Electric pump AC 230V 50Hz MEC-60 l/min
Art. 091-6100-070 Electric pump AC 230V 50Hz MEC-70 l/min
Art. 091-6102-070 Electric pump 115V 60Hz 70 l/min

Art. 091-6100-100 Electric pump AC 230V 50Hz MEC-100 l/min
Art. 091-6102-100 Electric pump 115V 60Hz 100 l/min

Art. 908-0516-040 Connection hose ø 20 mm M-M 1” 4 m lenght
Art. 908-0616-040 Connection hose ø 25 mm M-M 1” 4 m lenght

Art. 093-5210-000 Automatic nozzle PA60 Flow rate 70 l/min
Art. 093-5220-000 Automatic nozzle PA120 Flow rate 120 l/min

Art. 092-5200-230 Electronic control unit MecGest 110/230V 50Hz
Software included

Art. 092-5170-110 Mechanical flow meter with pulses MGI-110 - 5-110 l/min

Art. 092-5220-000 Codified communication kit USB key reader for PC

Art. 092-5300-000 Red Key - Manager - 1 piece

OPTIONAL:

Art. 092-5300-010 Kit Blue Keys - Users - 10 pieces

Art. 090-5072-000 Base column Cami-Dispenser

Art. 094-5240-000 Water separating delivery filter for diesel 70 l/min
Art. 094-5245-000 Water separating delivery filter for diesel 150 l/min

DIESEL TRANSFER SYSTEM “Electronic Cami Dispenser”

Ref.	Descrip.	Flow rate	Voltage	Power	Inlet-Outlet	Conn. hose	Nozzle	Flow meter	Duty cycle	Wei-ght	Packaging
		l/min	AC V./Hz	W	BSPG	Ø			min	Kg	mm
090-5074-060	Cami Dispenser	**60**	230/50	440	F1"-F1"	20	Aut.PA60	MGI110	Contin.	29,00	505X355X425
090-5074-070	Cami Dispenser	**70**	230/50	480	F1"-F1"	20	Aut.PA60	MGI110	Contin.	30,00	505X355X425
090-5074-100	Cami Dispenser	**100**	230/50	800	F1"-F1"	25	Aut.PA120	MGI110	Contin.	36,50	505X355X425
090-5074-07X	Cami Dispenser	**70**	115/60	650	F1"-F1"	20	Aut.PA60	MGI110	Contin.	30,00	505X355X425
090-5074-10X	Cami Dispenser	**100**	115/60	1045	F1"-F1"	25	Aut.PA120	MGI110	Contin.	36,50	505X355X425

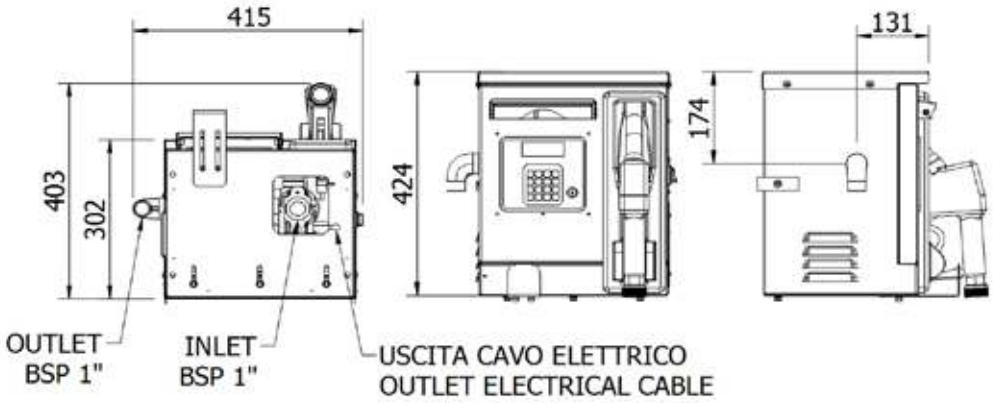

DIESEL TRANSFER SYSTEM “Electronic Cami Dispenser”

Diesel transferring kit in solid structure for private use. It allows the quick and clean filling of the vehicles. It permits the following functions: the identification of the authorised users, the pre-selection of dispensed quantitty, the detection of the total consumption and the single-user consumption, the storage of the deliveries and the management of 200 users. The system is equipped with key-manager to start the delivery quickly. The system includes the nozzle holder with microswitch to turn the pump on/off, automatic nozzle with swiveling joint and side hose holder. The equipment can be fixed to the wall, to a tank or to its own column.

“Electronic Cami Dispenser” series composed by:

Art. 091-6100-060 Electric pump AC 230V 50Hz MEC-60 l/min
Art. 091-6100-070 Electric pump AC 230V 50Hz MEC-70 l/min
Art. 091-6102-070 Electric pump 115V 60Hz 70 l/min

Art. 091-6100-100 Electric pump AC 230V 50Hz MEC-100 l/min
Art. 091-6102-100 Electric pump 115V 60Hz 100 l/min

Art. 908-0516-040 Connection hose ø 20 mm M-M 1” 4 m lenght
Art. 908-0616-040 Connection hose ø 25 mm M-M 1” 4 m lenght

Art. 093-5210-000 Automatic nozzle PA60 Flow rate 70 l/min
Art. 093-5220-000 Automatic nozzle PA120 Flow rate 120 l/min

Art. 092-5200-230 Electronic control unit MecGest 110/230V 50Hz
Software included

Art. 092-5170-110 Mechanical pulsed flow meter MGI-110 - 5-110 l/min

Art. 092-5220-000 Codified communication kit USB key reader for PC

Art. 092-5300-000 Red Key- Manager - nr. 1 pc

OPTIONAL:

Art. 092-5300-010 Kit blue keys - Users - nr. 10 pcs.

Art. 094-5240-000 Water separating delivery filter for diesel 70 l/min
Art. 094-5245-000 Water separating delivery filter for diesel 150 l/min

DIESEL TRANSFER SYSTEM “Electronic Cami Dispenser”

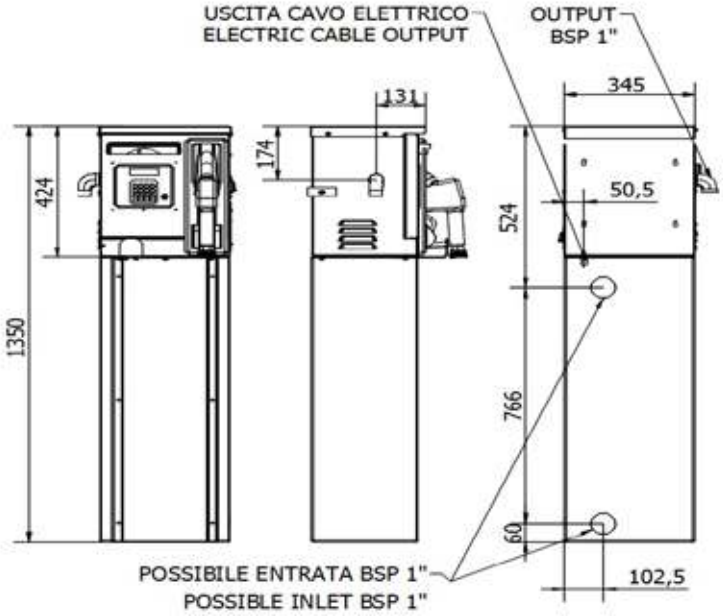

Ref.	Descrip.	Voltage	Flow rate	Power	Inlet-outlet	Conn. hose	Nozzle	Flow meter	Duty cycle	Weight
		l/min	AC V./Hz	W	BSPG	Ø			min	Kg
090-5075-060	Cami Dispenser	**60**	230/50	440	F1" - F1"	20	Aut.PA60	MGI110	Contin.	52,50
090-5075-070	Cami Dispenser	**70**	230/50	480	F1" - F1"	20	Aut.PA60	MGI110	Contin.	53,50
090-5075-100	Cami Dispenser	**100**	230/50	800	F1" - F1"	25	Aut.PA120	MGI110	Contin.	60,00
090-5075-07X	Cami Dispenser	**70**	115/60	650	F1" - F1"	20	Aut.PA60	MGI110	Contin.	53,50
090-5075-10X	Cami Dispenser	**100**	115/60	1045	F1" - F1"	25	Aut.PA120	MGI110	Contin.	60,00

Ref.	Packaging (mm)	NR. of boxes
090-5075-060	505X355X425 - 365X305X945	2
090-5075-070	505X355X425 - 365X305X945	2
090-5075-100	505X355X425 - 365X305X945	2
090-5075-07X	505X355X425 - 365X305X945	2
090-5075-10X	505X355X425 - 365X305X945	2

DIESEL TRANSFER SYSTEM “Electronic Cami Dispenser LC”

Diesel transferring kit for private use. It allows the quick and safe filling of the vehicles. It also permits to measure and record the dispensed quantities. It permits the following functions: the preselection of the dispatched quantity, to see the total dispensed and each single dispense, to memorize the dispatches. The systems comes with a Lan Connection that enables the constant communication with the software, the reception of the type of configuration from remote and the report sending of the dispenses, MecGest can manage up to 200 users. The system is equipped with user-key and manager-key, to quickly start the dispatch. It is equipped with nozzle holder, microswitch to turn the pump on/off, automatic nozzle with swiveling joint, and extractable hose support. The equipment can be fixed to the wall, to a tank or to its own column.

“Electronic Cami Dispenser LC” series composed by:

Art. 091-6100-060 Electric pump AC 230V 50Hz MEC-60 l/min
Art. 091-6100-070 Electric pump AC 230V 50Hz MEC-70 l/min
Art. 091-6102-070 Electric pump AC 115V 60Hz MEC-70 l/min

Art. 091-6100-100 Electric pump AC 230V 50Hz MEC-100 l/min
Art. 091-6102-100 Electric pump AC 115V 60Hz MEC-100 l/min

Art. 908-0516-040 Connection hose ø 20 mm M-M 1” 4 m lenght
Art. 908-0616-040 Connection hose ø 25 mm M-M 1” 4 m lenght

Art. 093-5210-000 Automatic nozzle PA60 Flow rate 70 l/min
Art. 093-5220-000 Automatic nozzle PA120 Flow rate 120 l/min

Art. 092-5200-230 Electronic control unit MecGest 110/230V 50Hz
Software included

Art. 092-5170-110 Mechanical pulsed flow meter MGI-110 - 5-110 l/min

Art. 092-5350-001 Codified Kit Lan Connection USB-RS485

OPTIONAL:

Art. 092-5300-010 Kit blue keys - Users - nr. 10 pcs

Art. 092-5220-000 Codified communication kit USB key reader for PC

Art. 090-5072-000 Base Column Cami-Dispenser

Art. 094-5240-000 Water separating delivery filter for diesel 70 l/min
Art. 094-5245-000 Water separating delivery filter for diesel 150 l/min

DIESEL TRANSFER SYSTEM “Electronic Cami Dispenser LC”

Ref.	Descrip.	Flow rate	Voltage	Power	Inlet-Outlet	Conn. hose	Nozzle	Flow meter	Duty cycle	Wei-ght	Packaging
		l/min	AC V./Hz	W	BSPG	Ø			min	Kg	mm
090-5076-060	Cami Dispenser	**60**	230/50	440	F1" - F1"	20	Aut.PA60	MGI110	Contin.	29,00	505X355X425
090-5076-070	Cami Dispenser	**70**	230/50	480	F1" - F1"	20	Aut.PA60	MGI110	Contin.	30,00	505X355X425
090-5076-100	Cami Dispenser	**100**	230/50	800	F1" - F1"	25	Aut.PA120	MGI110	Contin.	36,50	505X355X425
090-5076-07X	Cami Dispenser	**70**	115/60	650	F1" - F1"	20	Aut.PA60	MGI110	Contin.	30,00	505X355X425
090-5076-10X	Cami Dispenser	**100**	115/60	1045	F1" - F1"	25	Aut.PA120	MGI110	Contin.	36,50	505X355X425

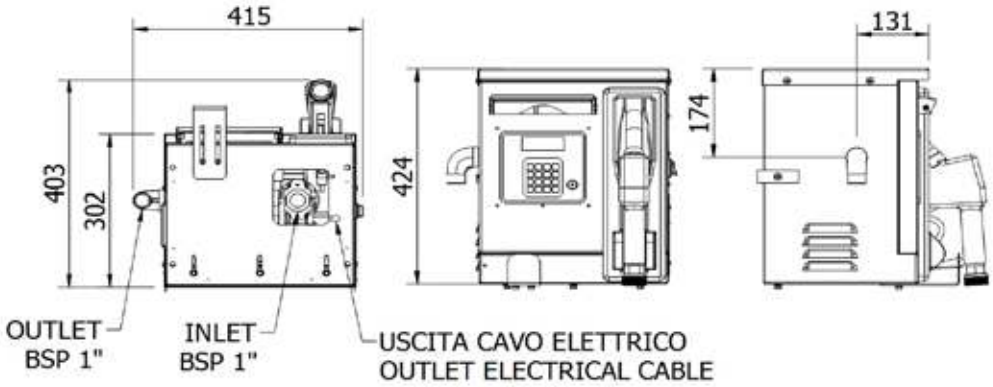

DIESEL TRANSFER SYSTEM “Electronic Cami Dispenser LC”

Diesel transferring kit for private use. It allows the quick and safe filling of the vehicles. It allows the quick and safe filling of the vehicles. It permits the following functions: the preselection of the dispatched quantity, to see the total dispensed and each single dispense, to memorize the dispatches. The systems comes with a Lan Connection that enables the constant communication with the software, the reception of the type of configuration from remote and the report sending of the dispenses, MecGest can manage up to 200 users. It is equipped with nozzle holder, microswitch to turn the pump on/off, automatic nozzle with swiveling joint, and extractable hose support. The equipment can be fixed to the ground.

“Electronic Cami Dispenser LC” series composed by:

Art. 091-6100-060 Electric pump AC 230V 50Hz MEC-60 l/min
Art. 091-6100-070 Electric pump AC 230V 50Hz MEC-70 l/min
Art. 091-6102-070 Electric pump AC 115V 60Hz MEC-70 l/min

Art. 091-6100-100 Electric pump AC 230V 50Hz MEC-100 l/min
Art. 091-6102-100 Electric pump AC 115V 60Hz MEC-100 l/min

Art. 908-0516-040 Connection hose ø 20 mm M-M 1” 4 m lenght
Art. 908-0616-040 Connection hose ø 25 mm M-M 1” 4 m lenght

Art. 093-5210-000 Automatic nozzle PA60 Flow rate 70 l/min
Art. 093-5220-000 Automatic nozzle PA120 Flow rate 120 l/min

Art. 092-5200-230 Electronic control unit MecGest 110/230V 50Hz
Software included

Art. 092-5170-110 Mechanical pulsed flow meter MGI-110 - 5-110 l/min

Art. 092-5350-001 Codified Kit Lan Connection USB-RS485

OPTIONAL:

Art. 092-5300-010 Kit blue keys - Users - nr. 10 pcs

Art. 092-5220-000 Codified communication kit USB key reader for PC

Art. 094-5240-000 Water separating delivery filter for diesel 70 l/min
Art. 094-5245-000 Water separating delivery filter for diesel 150 l/min

DIESEL TRANSFER SYSTEM “Electronic Cami Dispenser LC”

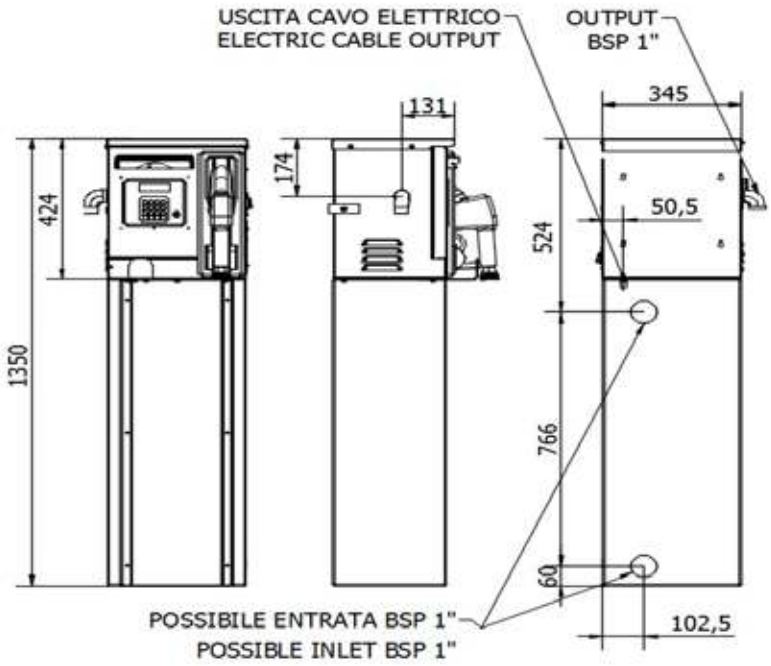

Ref.	Descrip.	Flow rate	Voltage	Power	Inlet-outlet	Conn. hose	Nozzle	Flow meter	Duty cycle	Weight
		l/min	AC V./Hz	W	BSPG	Ø			min	Kg
090-5077-060	Cami Dispenser	**60**	230/50	440	F1" - F1"	20	Aut.PA60	MGI110	Contin.	52,50
090-5077-070	Cami Dispenser	**70**	230/50	480	F1" - F1"	20	Aut.PA60	MGI110	Contin.	53,50
090-5077-100	Cami Dispenser	**100**	230/50	800	F1" - F1"	25	Aut.PA120	MGI110	Contin.	60,00
090-5077-07X	Cami Dispenser	**70**	115/60	650	F1" - F1"	20	Aut.PA60	MGI110	Contin.	53,50
090-5077-10X	Cami Dispenser	**100**	115/60	1045	F1" - F1"	25	Aut.PA120	MGI110	Contin.	60,00

Ref.	Packaging (mm)	NR. of boxes
090-5077-060	505X355X425 - 365X305X945	2
090-5077-070	505X355X425 - 365X305X945	2
090-5077-100	505X355X425 - 365X305X945	2
090-5077-07X	505X355X425 - 365X305X945	2
090-5077-10X	505X355X425 - 365X305X945	2

DIESEL TRANSFER SYSTEM “Gaia Service”

Diesel transferring kit in solid structure for private use. It allows the quick and clean filling of the vehicles. It is equipped with automatic nozzle with swiveling joint, water filter absorption able to dispense the product free from impurites, microswitch to turn the pump on/off and side hose holder. Removable frontal panel for easy maitenance. The equipment can be fixed to the ground.

“Gaia Service” series composed by:

Art. 091-6100-070 Electric pump AC 230V 50Hz MEC-70 l/min
Art. 091-6102-070 Electric pump AC 115V 60Hz MEC-70 l/min

Art. 091-6100-100 Electric pump AC 230V 50Hz MEC-100 l/min
Art. 091-6102-100 Electric pump AC 115V 60Hz MEC-100 l/min

Art. 908-0516-040 Connection hose ø 20 mm M-M 1” 4 m lenght
Art. 908-0616-040 Connection hose ø 25 mm M-M 1” 4 m lenght

Art. 093-5210-000 Automatic nozzle PA60 Flow rate 70 l/min
Art. 093-5220-000 Automatic nozzle PA120 Flow rate 120 l/min

Art. 092-5104-000 Mechanical flow meter 4 digits F1” 120 l/min

Art. 094-5240-000 Water separating delivery filter for diesel 70 l/min
Art. 094-5245-000 Water separating delivery filter for diesel 150 l/min

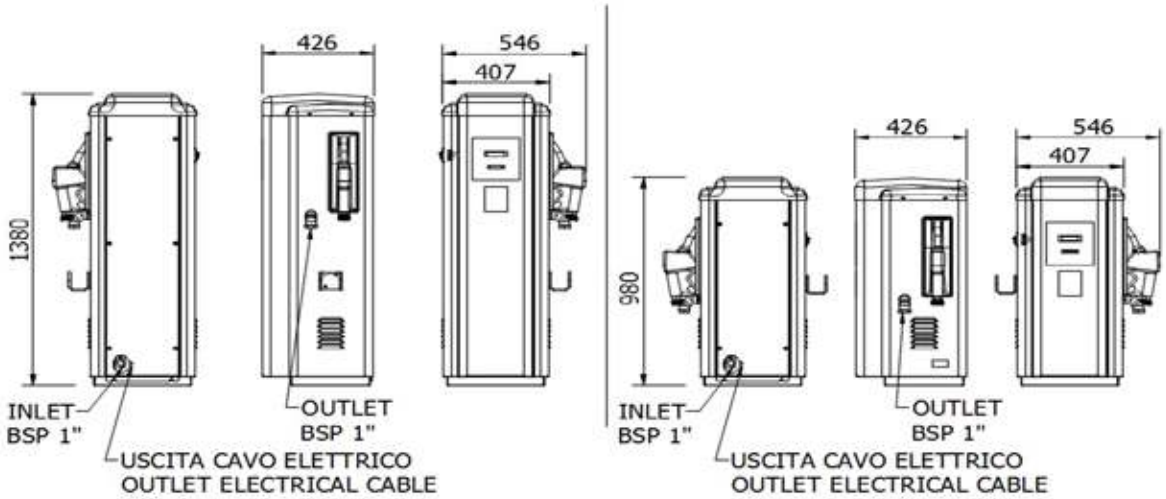

H. 1380 mm **H.980 mm - Tank**

DIESEL TRANSFER SYSTEM “Gaia Service”

H. 1380 mm

H.980 mm - Tank

Ref.	Descrip.	Flow rate	Voltage	Power	Inlet-outlet	Conn. hose	Nozzle	Flow me-ter/Filter	Duty cycle	Weight
		l/min	AC V./Hz	W	BSPG	Ø			min	Kg
H. 1380 mm										
090-5080-070	Gaia Service	**70**	230/50	480	F1" - F1"	20	Aut.PA60	YES 4C	Contin.	69,00
090-5080-100	Gaia Service	**100**	230/50	800	F1" - F1"	25	Aut.PA120	YES 4C	Contin.	76,00
090-5080-07X	Gaia Service	**70**	115/60	650	F1" - F1"	20	Aut.PA60	YES 4C	Contin.	69,00
090-5080-10X	Gaia Service	**100**	115/60	1045	F1" - F1"	25	Aut.PA120	YES 4C	Contin.	76,00
H. 980 mm	**Suitable for fastening to tank**									
090-5081-070	Gaia "Tank"	**70**	230/50	480	F1" - F1"	20	Aut.PA60	YES 4C	Contin.	61,00
090-5081-100	Gaia "Tank"	**100**	230/50	800	F1" - F1"	25	Aut.PA120	YES 4C	Contin.	68,00
090-5081-07X	Gaia "Tank"	**70**	115/60	650	F1" - F1"	20	Aut.PA60	YES 4C	Contin.	61,00
090-5081-10X	Gaia "Tank"	**100**	115/60	1045	F1" - F1"	25	Aut.PA120	YES 4C	Contin.	68,00

Ref.	Packaging (mm)	NR. of boxes
090-5080-070	530X490X1410	1
090-5080-100	530X490X1410	1
090-5080-07X	530X490X1410	1
090-5080-10X	530X490X1410	1

Ref.	Packaging (mm)	NR. of boxes
090-5081-070	530X490X1010	1
090-5081-100	530X490X1010	1
090-5081-07X	530X490X1010	1
090-5081-10X	530X490X1010	1

DIESEL TRANSFER SYSTEM “Electronic Gaia Service”

Diesel transferring kit in solid structure for private use. It allows the quick and clean filling of the vehicles. It permits the following functions: the identification of the authorised users, the pre-selection of dispensed quantitty, the detection of the total consumption and the single-user consumption, the storage of the deliveries and the management of 200 users. The system is equipped with key-manager to start the delivery quickly. The system includes the nozzle holder with microswitch to turn the pump on/off, automatic nozzle with swiveling joint and side hose holder.

“Electronic Gaia Service” series composed by:

Art. 091-6100-070 Electric pump AC 230V 50Hz MEC-70 l/min
Art. 091-6102-070 Electric pump AC 115V 60Hz MEC-70 l/min

Art. 091-6100-100 Electric pump AC 230V 50Hz MEC-100 l/min
Art. 091-6102-100 Electric pump AC 115V 60Hz MEC-100 l/min

Art. 908-0516-040 Connection hose ø 20 mm M-M 1” 4 m lenght
Art. 908-0616-040 Connection hose ø 25 mm M-M 1” 4 m lenght

Art. 093-5210-000 Automatic nozzle PA60 Flow rate 70 l/min
Art. 093-5220-000 Automatic nozzle PA120 Flow rate 120 l/min

Art. 092-5200-230 Electronic control unit MecGest 110/230V 50Hz
Software included

Art. 092-5170-110 Mechanical pulsed flow meter MGI-110 - 5-110 l/min

Art. 094-5240-000 Water separating delivery filter for diesel 70 l/min
Art. 094-5245-000 Water separating delivery filter for diesel 150 l/min

Art. 092-5220-000 Codified communication kit USB key reader for PC

Art. 092-5300-000 Red Key- Manager - nr. 1 pc.

OPTIONAL:

Art. 092-5300-010 Kit blue keys - Users - nr. 10 pcs

H. 1380 mm

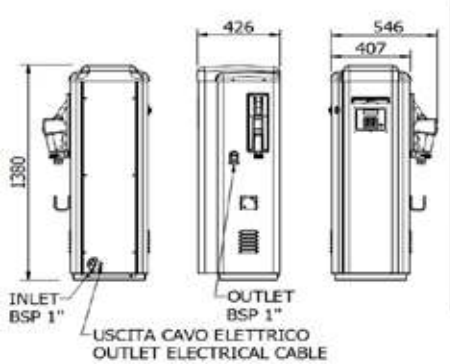

H.980 mm - Tank

DIESEL TRANSFER SYSTEM “Electronic Gaia Service”

H. 1380 mm

H.980 mm - Tank

Ref.	Descrip.	Flow rate	Voltage	Power	Inlet-outlet	Conn. hose	Nozzle	Flow me-ter/Flter	Duty cycle	Weight
		l/min	AC V./Hz	W	BSPG	Ø			min	Kg
H. 1380 mm										
090-5084-070	Gaia Service	**70**	230/50	480	F1" - F1"	20	Aut.PA60	YES	Contin.	69,00
090-5084-100	Gaia Service	**100**	230/50	800	F1" - F1"	25	Aut.PA120	YES	Contin.	76,00
090-5084-07X	Gaia Service	**70**	115/60	650	F1" - F1"	20	Aut.PA60	YES	Contin.	69,00
090-5084-10X	Gaia Service	**100**	115/60	1045	F1" - F1"	25	Aut.PA120	YES	Contin.	76,00
H. 980 mm	**Suitable for fastening to tank**									
090-5085-070	Gaia "Tank"	**70**	230/50	480	F1" - F1"	20	Aut.PA60	YES	Contin.	61,00
090-5085-100	Gaia "Tank"	**100**	230/50	800	F1" - F1"	25	Aut.PA120	YES	Contin.	68,00
090-5085-07X	Gaia "Tank"	**70**	115/60	650	F1" - F1"	20	Aut.PA60	YES	Contin.	61,00
090-5085-10X	Gaia "Tank"	**100**	115/60	1045	F1" - F1"	25	Aut.PA120	YES	Contin.	68,00

Ref.	Packaging (mm)	NR. of boxes
090-5084-070	530X490X1410	1
090-5084-100	530X490X1410	1
090-5084-07X	530X490X1410	1
090-5084-10X	530X490X1410	1

Ref.	Packaging (mm)	NR. of boxes
090-5085-070	530X490X1010	1
090-5085-100	530X490X1010	1
090-5085-07X	530X490X1010	1
090-5085-10X	530X490X1010	1

DIESEL TRANSFER SYSTEM “Electronic Gaia Service LC”

Diesel transferring kit in solid structure for private use. It allows the quick and clean filling of the vehicles. It also permits to measure and record the dispensed quantities. It permits the following functions: the pre-selection of the dispatched quantity, to see the total dispensed and each single dispense, to memorize the dispatches. The systems comes with a Lan Connection that enables the constant communication with the software, the reception of the type of configuration from remote and the report sending of the dispenses, MecGest can manage up to 200 users. The system includes the nozzle holder with microswitch to turn the pump on/off, automatic nozzle with swiveling joint and hose holder.

“Electronic Gaia Service LC” series composed by:

Art. 091-6100-070 Electric pump AC 230V 50Hz MEC-70 l/min
Art. 091-6102-070 Electric pump AC 115V 60Hz MEC-70 l/min

Art. 091-6100-100 Electric pump AC 230V 50Hz MEC-100 l/min
Art. 091-6102-100 Electric pump AC 115V 60Hz MEC-100 l/min

Art. 908-0516-040 Connection hose ø 20 mm M-M 1” 4 m lenght
Art. 908-0616-040 Connection hose ø 25 mm M-M 1” 4 m lenght

Art. 093-5210-000 Automatic nozzle PA60 Flow rate 70 l/min
Art. 093-5220-000 Automatic nozzle PA120 Flow rate 120 l/min

Art. 092-5200-230 Electronic control unit MecGest 110/230V 50Hz
Software included

Art. 092-5170-110 Mechanical pulsed flow meter MGI-110 - 5-110 l/min

Art. 094-5240-000 Water separating delivery filter for diesel 70 l/min
Art. 094-5245-000 Water separating delivery filter for diesel 150 l/min

Art. 092-5350-001 Codified Kit Lan Connection USB-RS485

OPTIONAL:

Art. 092-5300-010 Kit blue keys - Users - nr. 10 pcs

Art. 092-5220-000 Codified communication kit USB key reader for PC

H. 1380 mm

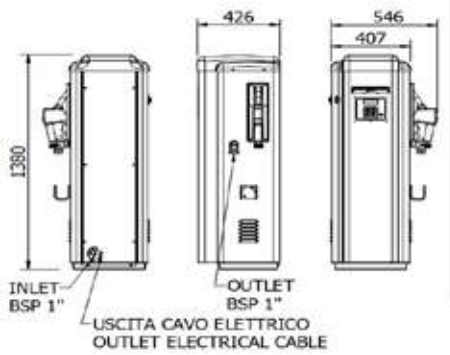

H.980 mm - Tank

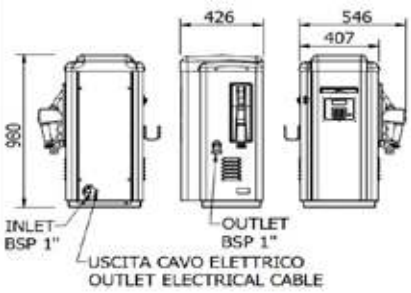

DIESEL TRANSFER SYSTEM “Electronic Gaia Service LC”

H. 1380 mm

H.980 mm - Tank

Ref.	Descrip.	Flow rate	Voltage	Power	Inlet-outlet	Conn. hose	Nozzle	Flow meter/Filter	Duty cycle	Weight
		l/min	AC V./Hz	W	BSPG	Ø			min	Kg
H. 1380 mm										
090-5086-070	Gaia Service	**70**	230/50	480	F1" - F1"	20	Aut.PA60	YES	Contin.	69,00
090-5086-100	Gaia Service	**100**	230/50	800	F1" - F1"	25	Aut.PA120	YES	Contin.	76,00
090-5086-07X	Gaia Service	**70**	115/60	650	F1" - F1"	20	Aut.PA60	YES	Contin.	69,00
090-5086-10X	Gaia Service	**100**	115/60	1045	F1" - F1"	25	Aut.PA120	YES	Contin.	76,00
H. 980 mm	**Suitable for fastening to tank**									
090-5087-070	Gaia "Tank"	**70**	230/50	480	F1" - F1"	20	Aut.PA60	YES	Contin.	61,00
090-5087-100	Gaia "Tank"	**100**	230/50	800	F1" - F1"	25	Aut.PA120	YES	Contin.	68,00
090-5087-07X	Gaia "Tank"	**70**	115/60	650	F1" - F1"	20	Aut.PA60	YES	Contin.	61,00
090-5087-10X	Gaia "Tank"	**100**	115/60	1045	F1" - F1"	25	Aut.PA120	YES	Contin.	68,00

Ref.	Packaging (mm)	NR. of boxes
090-5086-070	530X490X1410	1
090-5086-100	530X490X1410	1
090-5086-07X	530X490X1410	1
090-5086-10X	530X490X1410	1

Ref.	Packaging (mm)	NR. of boxes
090-5087-070	530X490X1010	1
090-5087-100	530X490X1010	1
090-5087-07X	530X490X1010	1
090-5087-10X	530X490X1010	1

HOSE REEL SUPPORT BASE COLUMN

HOSE REEL SUPPORT BASE COLUMN

This hose reel support column, ideal for connecting to diesel transfer dispensers, allows the use of 10/15 m hoses, making it easier to refuel large vehicles.
Hose rewinding is quick and safe, leaving a clutter-free work area.

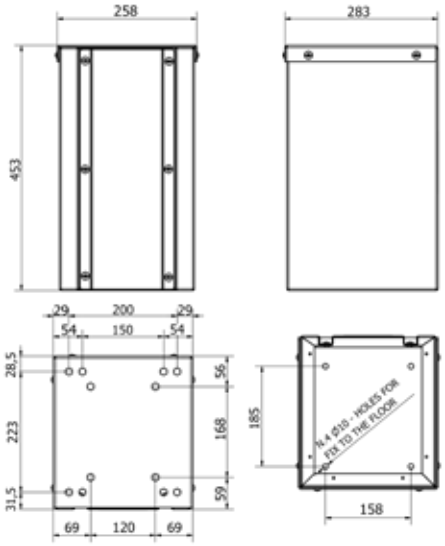

Art. 090-5072-010 **Base column support for hose reels Mod. F-460 F-550/555 (13 kg)**

ELECTRONIC CONTROL UNIT “MecGest Box”

Electronic control unit to manage the diesel transfer for private usage. It allows the measurement and record of the dispatched quantities and the following functions: identification of authorized vehicles, preselection of quantity to dispatch, it detects the total dispense and the single ones, it allows the memorization of the dispenses and it can handle 200 users. The system comes with a manager-key or Lan connection. The system can be completed with electric pump, nozzle holder with microswitch for switching on and off the pump, mechanical pulsed flow meter. The equipment is designed to be fixed to the wall or to tanks.

“MecGest Box” series composed by:

Art. 092-5200-230 Electronic control unit MecGest 110/230V 50Hz complete with software

Art. 092-5220-000 Communication kit USB keys reader for codified PC

Art. 092-5300-000 Red Key- Manager - 1 piece

Art. 092-5350-000 Codified Kit Lan Connection USB - RS485

OPTIONAL:

Art. 092-5300-010 Kit blue keys - Users - 10 pcs

Art. 091-6100-060 Electric pump AC 230V 50Hz MEC-60 l / min
Art. 091-6100-070 Electric pump AC 230V 50Hz MEC-70 l / min
Art. 091-6102-070 Electric pump 115V 60Hz MEC-70 l / min

Art. 091-6100-100 Electric pump AC 230V 50Hz MEC-100 l / min
Art. 091-6102-100 Electric pump 115V 60Hz MEC-100 l / min

Art. 092-5170-110 Mechanical pulsed flow meter MGI-110 - 5-110 l/min

Art. F90-9910-000 Aluminium nozzle holder with micro

Art. 092-5402-100 Signal cable 2 poles l. 100 m shielded

ELECTRONIC CONTROL UNIT “MecGest Box”

Ref.	Description	Voltage	Communication kit USB keys reader for codified PC	Lan Connection kit USB - R	Weight	Packaging
		AC V./Hz			kg	mm
092-5510-000	MecGest Box	230/50 - 115/60	YES	NO	6,50	285X285X230
092-5520-000	MecGest Box LC	230/50 - 115/60	NO	YES	6,50	285X285X230

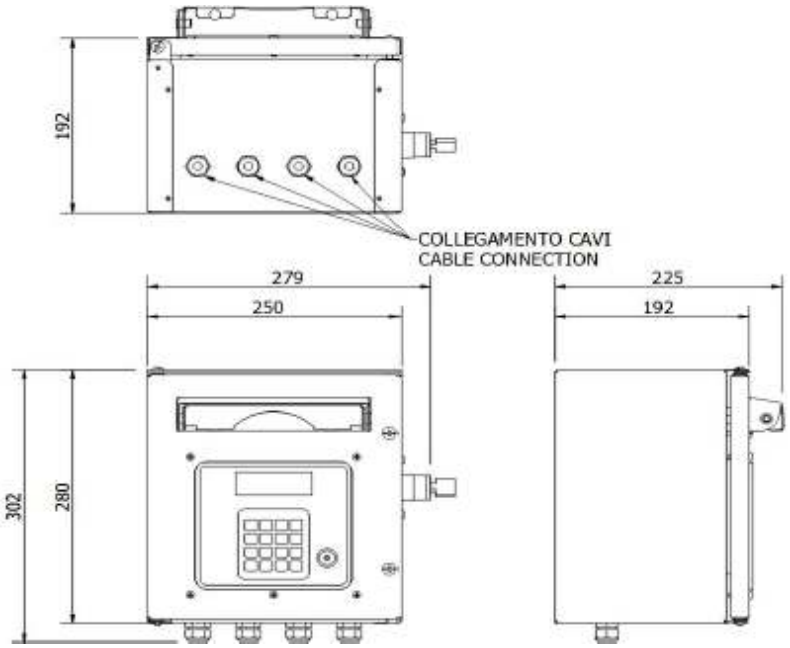

Electronic control unit that allows the refuelling of groups of vehicles. It offers the possibility to register the diesel supplies information and categorize them by user, vehicle, date and time. The equipment has to be used for private usage.

MecGest CONFIGURATION OPTIONS:

Art. 092-5200-230

OPTION 1

Art. 092-5220-000 + 092-5300-000

Art. 092-5300-010

OPTION 2

Art. 092-5350-001

OPTION 3 = OPTION 2 + OPTIONAL

Art. 092-5350-001 + 092-5220-000+ 092-5300-010

OPTIONAL:

Art. 092-5300-010 + 092-5220-000

OPTION 1/ COMMUNICATION KIT WITH MEMORY-KEY: Red key and its reader: through this option it is possible to download the data of the diesel supplies and activate new user-codes. This procedure is done through the use of the red key and its own reader that have to be used with the PC and our software MecGest. The identification of the users and of the vehicles to enable the diesel supplies is made through the PIN code.

OPTION 2/ CABLE COMMUNICATION KIT: LAN connection cable for the direct connection with the PC and MecGest software. Also in this case it is possible to download the data of the diesel supplies and activate new user-codes with direct cable connection. The identification of the users and of the vehicles to enable the diesel supplies is made through the PIN code.

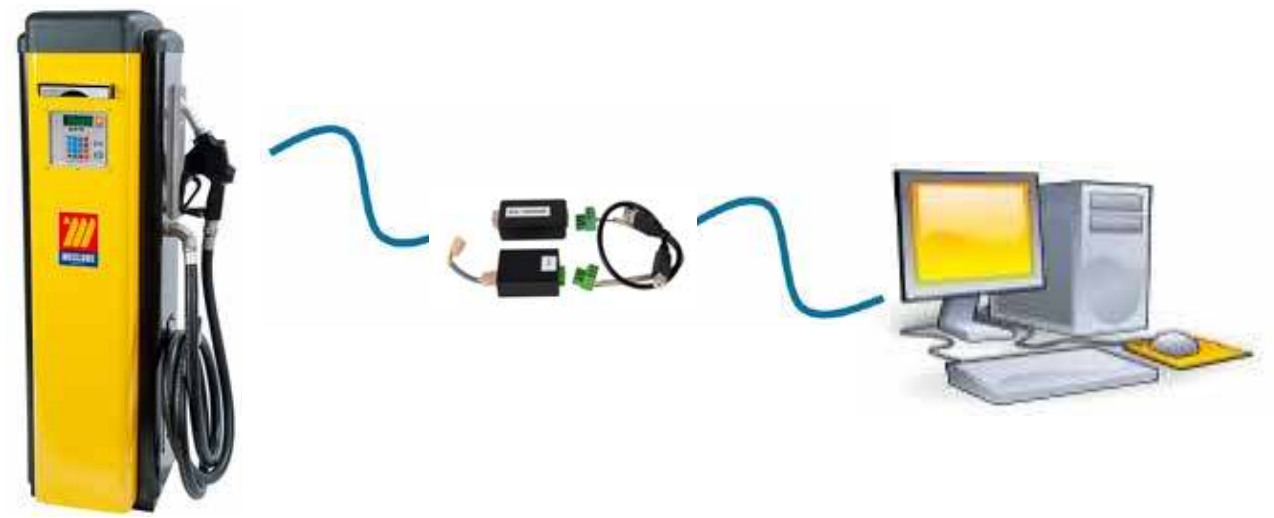

OPTION 3/ CABLE COMMUNICATION KIT + KEY READER + PACK 10 IDENTIFICATION KEYS: Converter and LAN connection cable for the direct connection to the PC and to MecGest software, and key reader with identification keys. Additionally, compared to previous options, it is possible to configurate the blue keys for users/vehicles in order to enable the diesel supplies. The diesel supply through PIN code is still available and the download of supply data or the activation of new keys or PIN are possible through LAN cable.

MINIMUM SYSTEM REQUISITES FOR MEC-GEST SOFTWARE: Operating system Microsoft Windows XP, 7, 8, 10 or superior, free USB port.

DIESEL TRANSFER SYSTEM “Service Station”

Diesel transferring kit in solid steel structure for private use with corrosion protection treatment. It allows the quick and clean filling of the vehicles, as well as measuring and recording the dispatched quantities. It is equipped with volumetric gear pump,4-piston volumetric flow meter, automatic nozzle with swiveling joint, nozzle holder with magnetic opening system to turn the pump on/off and side hose holder. Removable frontal panel for easy maitenance.

“Service Station” series composed by:

Self-priming volumetric rotary pumping unit with gears
The 230V 50-60 Hz electric motor is connected to the unit through V-belt pulleys. Supplied with flexible connection and 2” threaded flange

Self-priming volumetric rotary pumping unit with gears
The 400V 50 Hz electric motor is connected to the unit through V-belt pulleys. Supplied with flexible connection and 2” threaded flange

4-piston volumetric flow meter, with degasser that eliminates air in the measurement avoiding errors, tolerance of 0.2%

Art. 908-0616-040 Connection hose ø 25 mm M-M 1” 4 m lenght

Art. 093-5250-080 Magnetic automatic diesel nozzle ZPA80 Flow rate 80 l/min

OPTIONAL:

Art. 094-5245-000 Water separating delivery filter for diesel 150 l/min

DIESEL TRANSFER SYSTEM “Service Station”

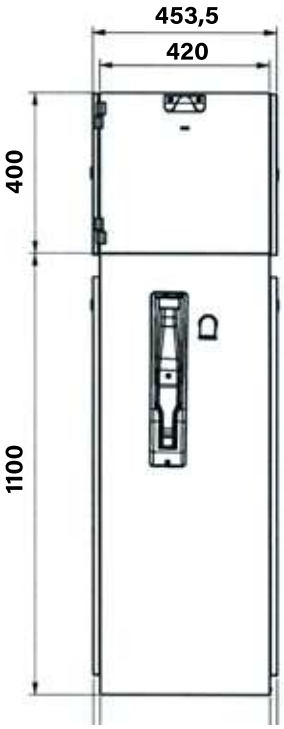

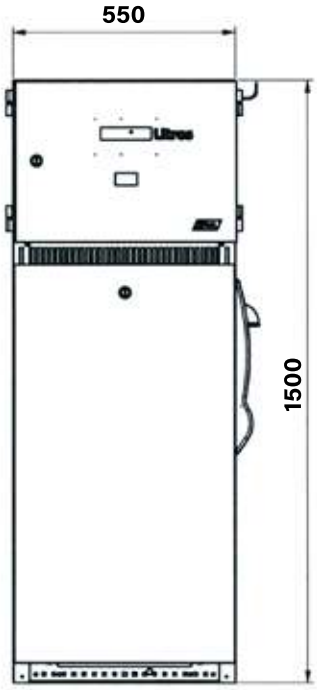

Ref.	Descrip.	Flow rate	Voltage	Power	Inlet-outlet	Conn. hose	Nozzle	Flow meter	Duty cycle	Weight
		l/min	AC V./Hz	W	BSPG	Ø			min	Kg
090-5090-080	Service Station	**80**	230/50-60	600	F1" - F1"	25	ZPA80	YES	Contin.	160,00
090-5091-080	Service Station	**80**	400/50	750	F1" - F1"	25	ZPA80	YES	Contin.	160,00

Ref.	Packaging (mm)	NR. of boxes
090-5090-080	476X640X1510	1
090-5091-080	476X640X1510	1

1	Delivery hose
2	Magnetic nozzle holder
3	Automatic nozzle
4	Hose holder
5	Digital Display
6	Delivery hose
7	Encoder
8	Volumetric flow meter
9	Volumetric rotary pumping unit
10	V-belt transmission
11	Electric motor

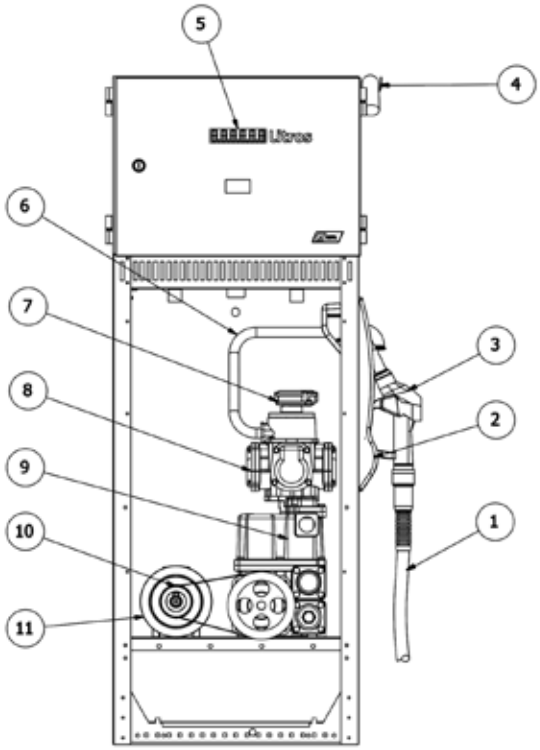

DIESEL TRANSFER SYSTEM “Pro Service Station”

Diesel transferring kit in solid steel structure for private use with corrosion protection treatment. It allows the quick and clean filling of the vehicles, as well as measuring and recording the dispatched quantities. It is equipped with volumetric gear pump,4-piston volumetric flow meter, automatic nozzle with swiveling joint, nozzle holder with magnetic opening system to turn the pump on/off and side hose holder. Removable frontal panel for easy maitenance. It permits the following functions: the identification of the authorised users, the pre-selection of dispensed quantity, the detection of the total consumption and the single-user consumption, the storage of the deliveries and the management of 200 users. The system is equipped with manager-key to quickly start the dispensing process.

“Pro-Service Station” series composed by:

Self-priming volumetric rotary pumping unit with gears
The 230V 50-60 Hz electric motor is connected to the unit through
V-belt pulleys. Supplied with flexible connection
and 2” threaded flange

Self-priming volumetric rotary pumping unit with gears
The 400V 50 Hz electric motor is connected to the unit through
V-belt pulleys. Supplied with flexible connection
and 2” threaded flange

4-piston volumetric flow meter, with degasser that
eliminates air in the measurement avoiding errors, tolerance of 0.2%

Art. 908-0616-040 Connection hose ø 25 mm M-M 1” 4 m lenght

Art. 093-5250-080 Magnetic automatic diesel nozzle ZPA80 Flow rate 80 l/min

Art. 092-5200-230 Electronic control unit MecGest 110/230V 50Hz Software included

Art. 092-5220-000 Codified communication kit USB key reader for PC

Art. 092-5300-000 Red Key- Manager - nr. 1 pc.

OPTIONAL:

Art. 092-5300-010 Kit blue keys - Users - nr. 10 pcs

Art. 094-5245-000 Water separating delivery filter for diesel 150 l/min

DIESEL TRANSFER SYSTEM “Pro Service Station”

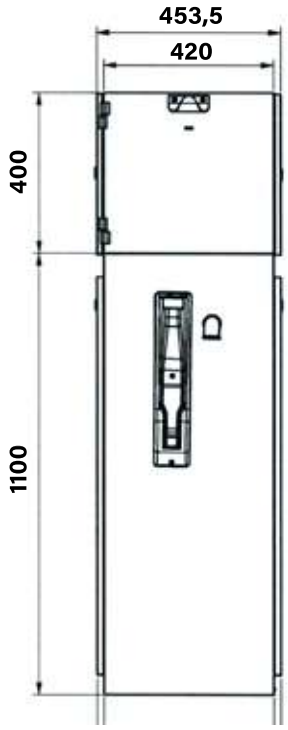

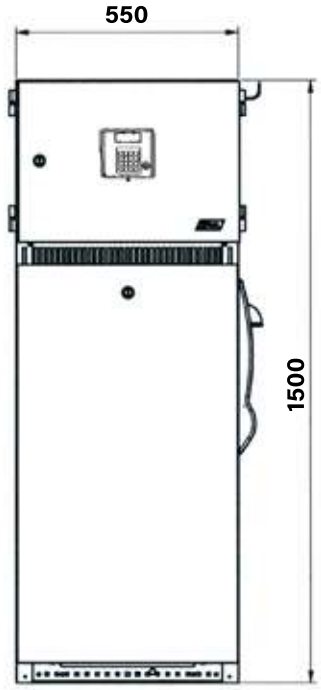

Ref.	Descrip.	Flow rate	Voltage	Power	Inlet-outlet	Conn. hose	Nozzle	Flow meter	Duty cycle	Weight
		l/min	AC V./Hz	W	BSPG	Ø			min	Kg
090-5092-080	Pro-Service Station	**80**	230/50-60	600	F1" - F1"	25	ZPA80	YES	Contin.	160,00
090-5093-080	Pro-Service Station	**80**	400/50	750	F1" - F1"	25	ZPA80	YES	Contin.	160,00

Ref.	Packaging (mm)	NR. of boxes
090-5092-080	476X640X1510	1
090-5093-080	476X640X1510	1

1	Delivery hose
2	Magnetic nozzle holder
3	Automatic nozzle
4	Hose holder
5	Digital Display
6	Delivery hose
7	Encoder
8	Volumetric flow meter
9	Volumetric rotary pumping unit
10	V-belt transmission
11	Electric motor

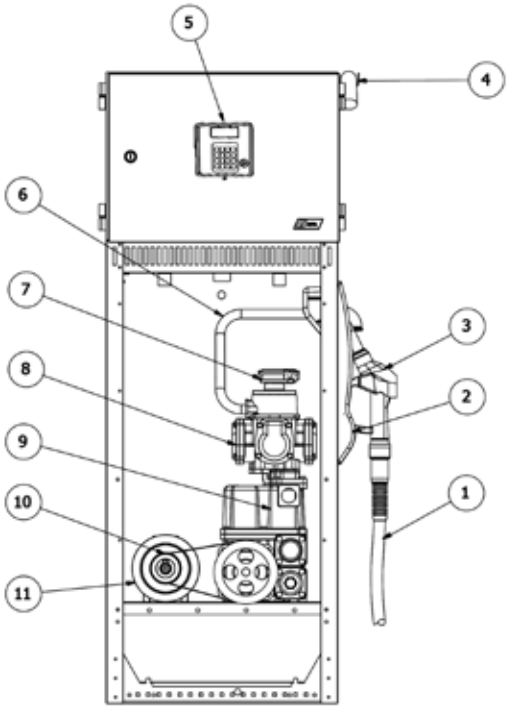

” Diesel Tank 220 ”

Rigid polyethylene tank for diesel transport for private use in total exemption for ADR (see ADR Regulation at page 242), with built-in transfer unit consisting of rotary vane self-priming pump available in various voltages (12-24V), delivery hose ø 20 mm, 4 m lenght, automatic nozzle with swiveling joint. The system is available at 220 liters capacity, can be integrated with flow meter for measuring diesel. Equipped with pressurinzing/depressurizing relief valve and lockable lid.

“Diesel Tank” series composed by:

Art. 090-6220-000 Only 220 l Tank

Art. 091-5081-045 Pump 12V - power cable (sec. 4 mmq, 4 m lenght) with pincers and fuse - 45 l/min

Art. 091-5083-045 24V Pump - power cable (sec. 4 mmq, 4 m lenght) wih pincers and fuse - 45 l/min

Art. 908-0516-040 Connection hose ø 20 mm M-M 1” 4 m lenght

Art. 093-5210-000 Automatic nozzle PA60 Flow rate 70 l/min

Art. 092-5124-000 Digital turbine flow meter MEC 24 min/max flow rate 7/120 l/min

TANK FOR DIESEL TRANSPORT ” Diesel Tank 220 ”

Ref.	Descrip.	Flow rate	Voltage	Power	Inlet-outlet	Conn. hose	Nozzle	Flow meter	Duty cycle	Wei-ght	Packaging
		l/min	DC Volt	W	BSPG	Ø			min	Kg	mm
090-6220-012	Tank 220 l	**45**	12	264	F1" - F1"	20	Aut.PA60	NO	40	37,00	600X910X665
090-6220-024	Tank 220 l	**45**	24	312	F1" - F1"	20	Aut.PA60	NO	40	37,00	600X910X665
090-6221-012	Tank 220 l	**45**	12	264	F1" - F1"	20	Aut.PA60	YES	40	37,50	600X910X665
090-6221-024	Tank 220 l	**45**	24	312	F1" - F1"	20	Aut.PA60	YES	40	37,50	600X910X665

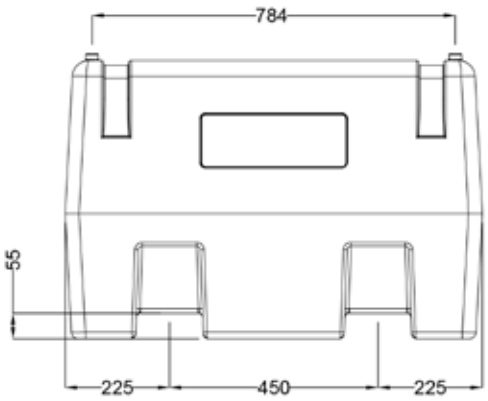

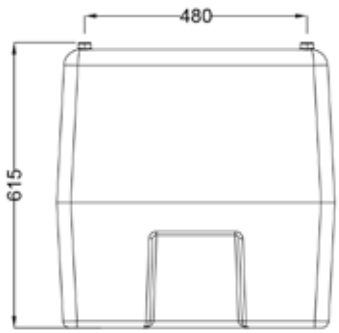

TANK FOR DIESEL TRANSPORT ” Diesel Tank 220 Pick-Up”

The special “Pick-Up” series has been specifically designed for transport on Pick-Up vehicles. Rigid polyethylene tank for diesel transport for private use in total exemption for ADR (see ADR Regulation at page 242), with built-in transfer unit consisting of rotary vane self-priming pump available in various voltages (12-24V), delivery hose ø 20 mm, 4 m lenght, automatic nozzle with swiveling joint. The system is available at 220 liters capacity, can be integrated with flow meter for measuring diesel. Equipped with level probe, pressurinzing/depressurizing relief valve and lockable lid.

“Diesel Tank Pick-Up” series composed by:

Art. 090-6225-000 Only 220 l Tank

Art. 091-5081-045 Pump 12V - power cable (sec. 4 mmq, 4 m lenght) with pincers and fuse - 45 l/min

Art. 091-5083-045 24V Pump - power cable (sec. 4 mmq, 4 m lenght) wih pincers and fuse - 45 l/min

Art. 908-0516-040 Connection hose ø 20 mm M-M 1” 4 m lenght

Art. 093-5210-000 Automatic nozzle PA60 Flow rate 70 l/min

Art. 092-5124-000 Digital turbine flow meter MEC 24 min/max flow rate 7/120 l/min

Art. 092-6000-220 Probe for Tank 220 l Pick-Up

TANK FOR DIESEL TRANSPORT ” Diesel Tank 220 Pick-Up”

Ref.	Descrip.	Flow rate	Voltage	Power	Inlet-outlet	Conn. hose	Nozzle	Flow meter	Duty cycle	Wei-ght	Packaging
		l/min	DC Volt	W	BSPG	Ø			min	Kg	mm
090-6225-012	Tank 220 l	**45**	12	264	F1" - F1"	20	Aut.PA60	NO	40	37,00	1155X805X440
090-6225-024	Tank 220 l	**45**	24	312	F1" - F1"	20	Aut.PA60	NO	40	37,00	1155X805X440
090-6226-012	Tank 220 l	**45**	12	264	F1" - F1"	20	Aut.PA60	YES	40	37,50	1155X805X440
090-6226-024	Tank 220 l	**45**	24	312	F1" - F1"	20	Aut.PA60	YES	40	37,50	1155X805X440

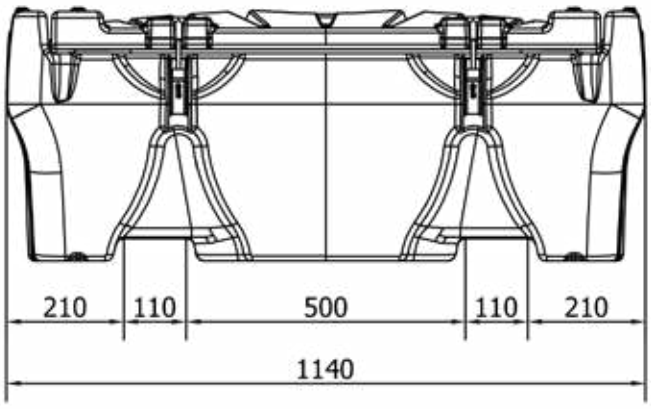

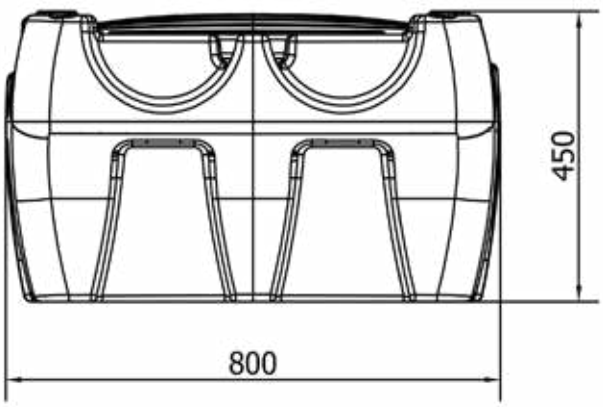

DIESEL TANK 330

Rigid polyethylene tank for diesel transport for personal use in total exemption for ADR (see ADR Regulation at page 242), with built-in transfer unit consisting of rotary vane self-priming pump available in various voltages (12-24V), delivery hose ø 20 mm, 4 m lenght, automatic nozzle with swiveling joint. The system is available at 330 liters capacity, can be integrated with flow meter for measuring diesel and level probe. Equipped with pressurinzing/depressurizing relief valve and lockable lid.

“Diesel Tank” series composed by:

Art. 090-6330-000 Only 330 l Tank

Art. 091-5081-045 12V Pump - power cable (sec. 4 mmq, 4 m lenght) with pincers and fuse - 45 l/min

Art. 091-5083-045 24V Pump - power cable (sec. 4 mmq, 4 m lenght) with pincers and fuse - 45 l/min

Art. 908-0516-040 Connection hose ø 20 mm M-M 1” 4 m lenght

Art. 093-5210-000 Automatic nozzle PA60 Flow rate 70 l/min

Art. 092-5124-000 Digital turbine flow meter MEC 24 min/max flow rate 7/120 l/min

Art. 092-6000-330 Probe for Tank 330 l

DIESEL TANK 330

Ref.	Descrip.	Flow rate	Voltage	Power	Inlet-outlet	Conn. hose	Nozzle	Flow meter	Duty cycle	Wei-ght	Packaging
		l/min	DC Volt	W	BSPG	Ø			min	Kg	mm
090-6330-012	Tank 330 l	**45**	12	264	F1" - F1"	20	Aut.PA60	NO	40	44,00	1200x800x650
090-6330-024	Tank 330 l	**45**	24	312	F1" - F1"	20	Aut.PA60	NO	40	44,00	1200x800x650
090-6331-012	Tank 330 l	**45**	12	264	F1" - F1"	20	Aut.PA60	YES	40	44,50	1200x800x650
090-6331-024	Tank 330 l	**45**	24	312	F1" - F1"	20	Aut.PA60	YES	40	44,50	1200x800x650

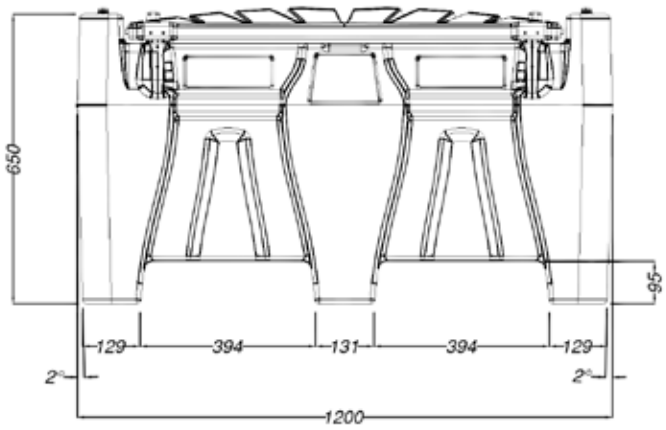

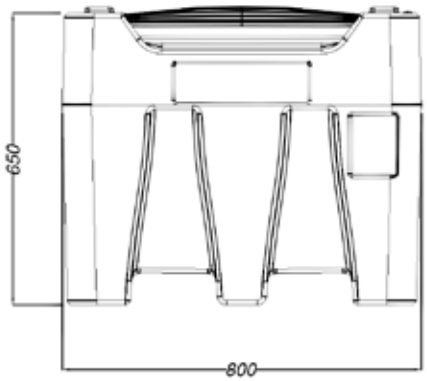

DIESEL TANK 330 Pick-Up

The special “Pick-Up” series has been specifically designed for transport on Pick-Up vehicles. rigid polyethylene tank for diesel transport for private use in total exemption for ADR (see ADR Regulation at page 242), with built-in transfer unit consisting of rotary vane self-priming pump available in various voltages (12-24V), delivery hose ø 20 mm, 4 m lenght, automatic nozzle with swiveling joint. The system is available at 330 liters capacity, can be integrated with flow meter for measuring diesel and level probe. Equipped with pressurinzing/depressurizing relief valve and lockable lid.

“Diesel Tank” series composed by:

Art. 090-6335-000 Only 330 l Tank

Art. 091-5081-045 12V Pump - power cable (sec. 4 mmq, 4 m lenght) with pincers and fuse - 45 l/min

Art. 091-5083-045 24V Pump - power cable (sec. 4 mmq, 4 m lenght) with pincers and fuse - 45 l/min

Art. 908-0516-040 Connection hose ø 20 mm M-M 1” 4 m lenght

Art. 093-5210-000 Automatic nozzle PA60 Flow rate 70 l/min

Art. 092-5124-000 Digital turbine flow meter MEC 24 min/max flow rate 7/120 l/min

Art. 092-6000-330 Probe for Tank 330 l

DIESEL TANK 330 Pick-Up

Ref.	Descrip.	Flow rate	Voltage	Power	Inlet-outlet	Conn. hose	Nozzle	Flow meter	Duty cycle	Wei-ght	Packaging
		l/min	DC Volt	W	BSPG	Ø			min	Kg	mm
090-6335-012	Tank 330 l	**45**	12	264	F1" - F1"	20	Aut.PA60	NO	40	53,00	1200x800x650
090-6335-024	Tank 330 l	**45**	24	312	F1" - F1"	20	Aut.PA60	NO	40	53,00	1200x800x650
090-6336-012	Tank 330 l	**45**	12	264	F1" - F1"	20	Aut.PA60	YES	40	53,50	1200x800x650
090-6336-024	Tank 330 l	**45**	24	312	F1" - F1"	20	Aut.PA60	YES	40	53,50	1200x800x650

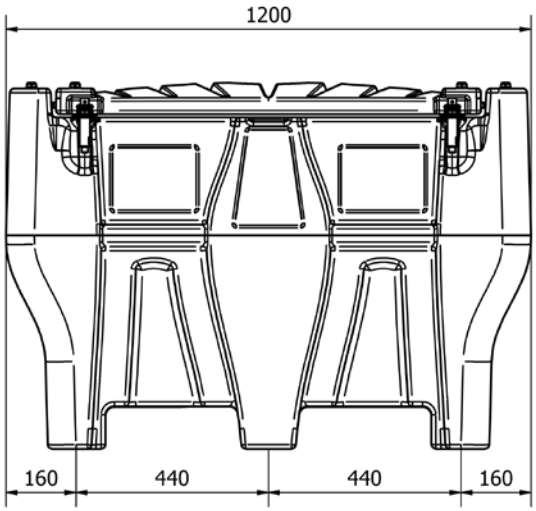

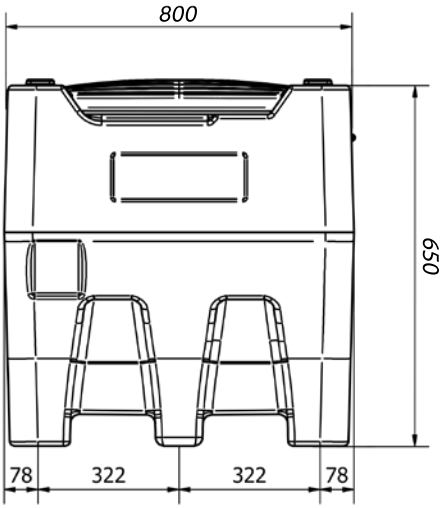

DIESEL TANK 440

Rigid polyethylene tank for diesel transport for private use in total exemption for ADR (see ADR Regulation at page 242), with built-in transfer unit consisting of rotary vane self-priming pump available in various voltages (12-24V), delivery hose ø 20 mm, 4 m lenght, automatic nozzle with swiveling joint. The system is available at 440 liters capacity, can be integrated with flow meter for measuring diesel and level probe. Equipped with pressurinzing/depressurizing relief valve and lockable lid.

“Diesel Tank” series composed by:

Art. 090-6440-000 Only 440 l Tank

Art. 091-5081-045 12V Pump - power cable (sec. 4 mmq, 4 m lenght) with pincers and fuse - 45 l/min

Art. 091-5083-045 24V Pump - power cable (sec. 4 mmq, 4 m lenght) with pincers and fuse - 45 l/min

Art. 908-0516-040 Connection hose ø 20 mm M-M 1” 4 m lenght

Art. 093-5210-000 Automatic nozzle PA60 Flow rate 70 l/min

Art. 092-5124-000 Digital turbine flow meter MEC 24 min/max flow rate 7/120 l/min

Art. 092-6000-440 Probe for Tank 440 l

DIESEL TANK 440

Ref.	Descrip.	Flow rate	Voltage	Power	Inlet-outlet	Conn. hose	Nozzle	Flow meter	Duty cycle	Wei-ght	Packaging
		l/min	DC Volt	W	BSPG	Ø			min	Kg	mm
090-6440-012	Tank 440 l	**45**	12	264	F1" - F1"	20	Aut.PA60	NO	40	53,00	1200x800x785
090-6440-024	Tank 440 l	**45**	24	312	F1" - F1"	20	Aut.PA60	NO	40	53,00	1200x800x785
090-6441-012	Tank 440 l	**45**	12	264	F1" - F1"	20	Aut.PA60	YES	40	53,50	1200x800x785
090-6441-024	Tank 440 l	**45**	24	312	F1" - F1"	20	Aut.PA60	YES	40	53,50	1200x800x785

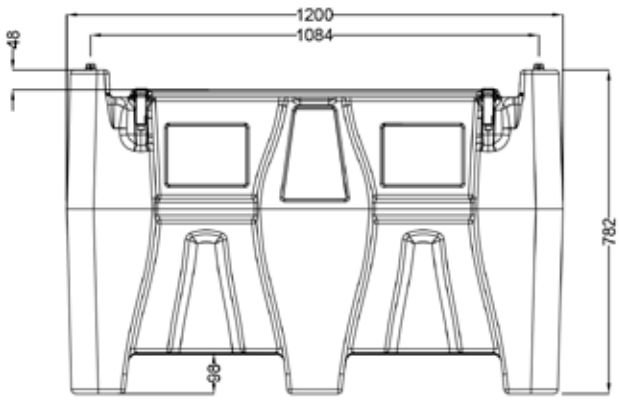

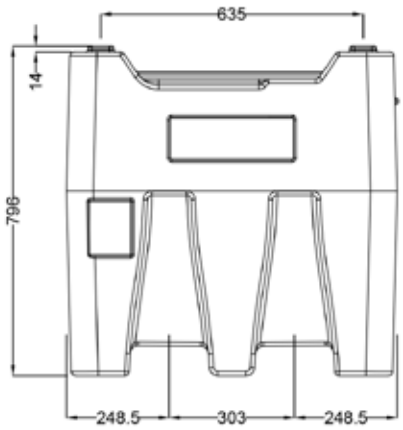

DIESEL TANK 440 Pick-Up

The special “Pick-Up” series has been specifically designed for transport on Pick-Up vehicles. rigid polyethylene tank for diesel transport for private use in total exemption for ADR (see ADR Regulation at page 242), with built-in transfer unit consisting of rotary vane self-priming pump available in various voltages (12-24V), delivery hose ø 20 mm, 4 m lenght, automatic nozzle with swiveling joint. The system is available at 440 liters capacity, can be integrated with flow meter for measuring diesel and level probe. Equipped with pressurinzing/depressurizing relief valve and lockable lid.

“Diesel Tank” series composed by:

Art. 090-6455-000 Only 440 l Tank

Art. 091-5081-045 12V Pump - power cable (sec. 4 mmq, 4 m lenght) with pincers and fuse - 45 l/min

Art. 091-5083-045 24V Pump - power cable (sec. 4 mmq, 4 m lenght) with pincers and fuse - 45 l/min

Art. 908-0516-040 Connection hose ø 20 mm M-M 1” 4 m lenght

Art. 093-5210-000 Automatic nozzle PA60 Flow rate 70 l/min

Art. 092-5124-000 Digital turbine flow meter MEC 24 min/max flow rate 7/120 l/min

Art. 092-6000-440 Probe for Tank 440 l

DIESEL TANK 440 Pick-Up

Ref.	Descrip.	Flow rate	Voltage	Power	Inlet-outlet	Conn. hose	Nozzle	Flow meter	Duty cycle	Wei-ght	Packaging
		l/min	DC Volt	W	BSPG	Ø			min	Kg	mm
090-6455-012	Tank 440 l	**45**	12	264	F1" - F1"	20	Aut.PA60	NO	40	60,00	1200x800x785
090-6455-024	Tank 440 l	**45**	24	312	F1" - F1"	20	Aut.PA60	NO	40	60,00	1200x800x785
090-6456-012	Tank 440 l	**45**	12	264	F1" - F1"	20	Aut.PA60	YES	40	60,50	1200x800x785
090-6456-024	Tank 440 l	**45**	24	312	F1" - F1"	20	Aut.PA60	YES	40	60,50	1200x800x785

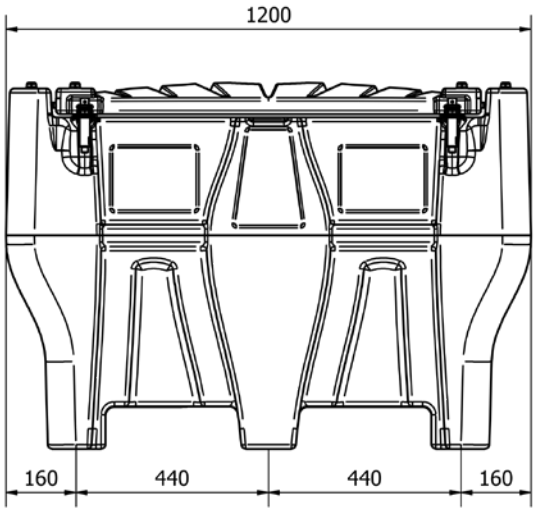

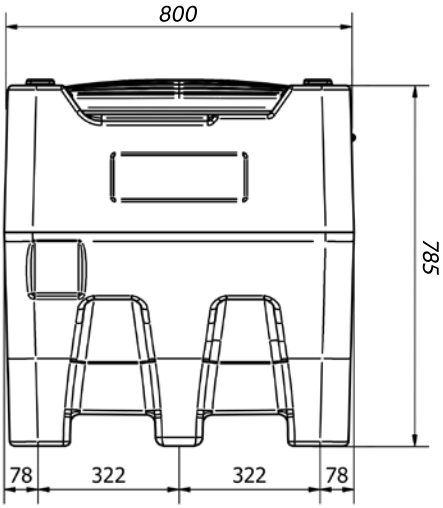

DIESEL-DEF-AdBlue® TANK 400+50

Combined tank for Diesel and DEF-AdBlue® transport for private use in total exemption for ADR (see ADR Regulation at page 242). Made of polyethylene with reinforced lockable lid. Diesel compartment with aluminium filling plug and integrated safety valve, DEF-AdBlue® compartment polyethylene plug. Complete with tank level indicator and suction filter only for diesel compartment. The tank is provided with chamfers to be lifted when it is full and grips to be lifted when empty. It is equipped with slots for positioniong the fastening belts at the support base. Diesel and DEF-AdBlue® compartments supplied with 4 m long cable with pincers for the connection to power battery supply.

“Diesel-DEF-AdBlue® Tank” series composed by:

Art. 090-6450-000 Only 400 l Tank + 50 l

Art. 091-5081-045 12V Pump - power cable (sec. 4 mmq, 4 m lenght) with pincers and fuse - 45 l/min

Art. 098-6050-012 DEF-AdBlue® submerged pump 12V-25 l/min power cable (sec.2,5 mmq. 1 m lenght) with switch

Art. 092-5124-000 Digital turbine flow meter MEC 24 min/max flow rate 7/120 l/min

Art. 908-0516-040 Connection hose ø 20 mm M-M 1” 4 m lenght for diesel

Art. 921-0500-040 Delivery hose EPDM ø 19x27 mm M-M 4 m lenght for DEF-AdBlue®

Art. 099-5199-000 Manual plastic nozzle “AD90” Flow rate 90 l/min

Art. 093-5210-000 Automatic nozzle PA60 Flow rate 70 l/min

Art. 092-6000-440 Probe for Tank 440 l

DIESEL-DEF-AdBlue® TANK 400+50

Ref.	Descrip.	Liquid	Flow rate	Voltage	Power	Inlet-outlet	Conn. hose	Nozzle	Flow meter	Duty cycle	Wei-ght	Packaging
			l/min	DC Volt	W	BSPG	Ø			min	kg	mm
	400 l	Diesel	**45**	12	264	F1"-F1"	20	Aut.PA60	NO	40	57,00	1200X800X796
090-6450-012	Tank 400 + 50											
	50 l	DEF	**15**	12	26		19	Man.AD90	NO	-		
	400 l	Diesel	**45**	12	264	F1"-F1"	20	Aut.PA60	YES	40	57,50	1200X800X796
090-6451-012	Tank 400 + 50											
	50 l	DEF	**15**	12	26		19	Man.AD90	NO	-		

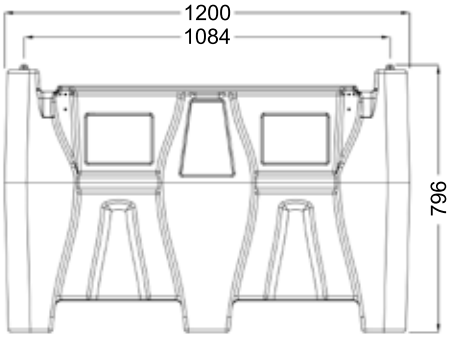

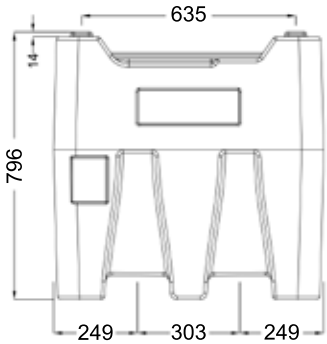

DIESEL-DEF-AdBlue® TANK 400+50 Pick-Up

The special “Pick-Up” series has been specifically designed for transport on Pick-Up vehicles. Combined tank for Diesel and DEF-AdBlue® transport for private use in total exemption for ADR (see ADR Regulation at page 242). Made of polyethylene with reinforced lockable lid. Diesel compartment with aluminium filling plug and integrated safety valve, DEF-AdBlue® compartment polyethylene plug. Complete with tank level indicator and suction filter only for diesel compartment. The tank is provided with chamfers to be lifted when it is full and grips to be lifted when empty. It is equipped with slots for positioniong the fastening belts at the support base. Diesel and DEF-AdBlue® compartments supplied with 4 m long cable with pincers for the connection to power battery supply.

“Diesel-DEF-AdBlue® Tank” series composed by:

Art. 090-6555-000 Only 400 l Tank + 50 l

Art. 091-5081-045 12V Pump - power cable (sec. 4 mmq, 4 m lenght) with pincers and fuse - 45 l/min

Art. 098-6050-012 DEF-AdBlue® submerged pump 12V-25 l/min power cable (sec.2,5 mmq. 1 m lenght) with switch

Art. 092-5124-000 Digital turbine flow meter MEC 24 min/max flow rate 7/120 l/min

Art. 908-0516-040 Connection hose ø 20 mm M-M 1” 4 m lenght for diesel

Art. 921-0500-040 Delivery hose EPDM ø 19x27 mm M-M 4 m lenght for DEF-AdBlue®

Art. 099-5199-000 Manual plastic nozzle “AD90” Flow rate 90 l/min

Art. 093-5210-000 Automatic nozzle PA60 Flow rate 70 l/min

Art. 092-6000-440 Probe for Tank 440 l

DIESEL-DEF-AdBlue® TANK 400+50 Pick-Up

Ref.	Descrip.	Liquid	Flow rate	Voltage	Power	Inlet-outlet	Conn. hose	Nozzle	Flow meter	Duty cycle	Wei-ght	Packaging
			l/min	DC Volt	W	BSPG	Ø			min	kg	mm
	400 l	Diesel	**45**	12	264	F1"-F1"	20	Aut.PA60	NO	40	57,00	1200X800X796
090-6555-012	Tank 400 + 50											
	50 l	DEF	**15**	12	26		19	Man.AD90	NO	-		
	400 l	Diesel	**45**	12	264	F1"-F1"	20	Aut.PA60	YES	40	57,50	1200X800X796
090-6556-012	Tank 400 + 50											
	50 l	DEF	**15**	12	26		19	Man.AD90	NO	-		

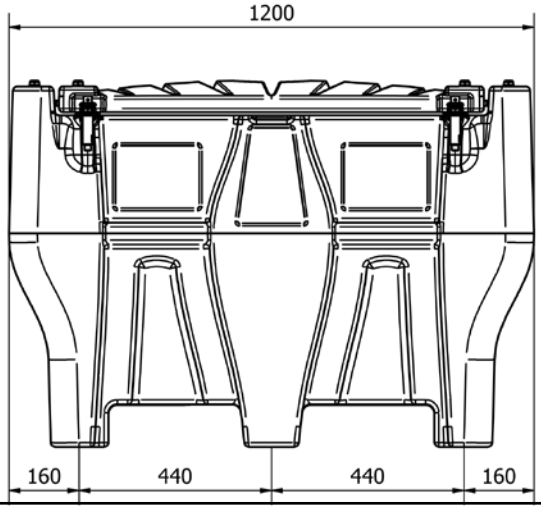

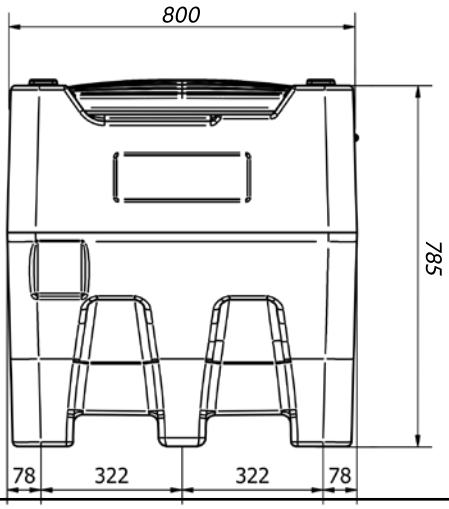

DIESEL TANK “Diesel Tank 900”

Tank for Diesel transport for private use in partial exemption paragraph 1.1.3.6 ADR (see ADR Regulation at page 242). Made of polyethylene with reinforced lockable lid. Diesel compartment with 2” aluminium filling plug and integrated 3 effects safety valve, internal breakwater bulkheads are integrated to grant the maximum security during the transport. Complete with tank level indicator and suction filter only for Diesel compartment. The tank is provided with chamfers to be lifted when it is full and grips to be lifted when empty. It is equipped with slots for positioning the fastening belts at the support base. Diesel compartment are supplied with 4 m long cable with pincers for the connection to the power battery supply.

“Diesel Tank” series composed by:

Art. 090-6900-000 Only 900 l Tank

Art. 091-5081-060 12V Pump - power cable (sec. 4 mmq, 4 m lenght) with pincers and fuse - 60 l/min

Art. 091-5083-060 24V Pump - power cable (sec. 4 mmq, 4 m lenght) with pincers and fuse - 60 l/min

Art. 092-5124-000 Digital turbine flow meter MEC 24 min/max flow rate 7/120 l/min

Art. 908-0516-060 Connection hose ø 20 mm M-M 1” 6 m lenght for diesel

Art. 093-5210-000 Automatic nozzle PA60 Flow rate 70 l/min

DIESEL TANK “Diesel Tank 900”

Ref.	Descrip.	Liquid	Flow rate	Voltage	Power	Inlet-outlet	Conn. hose	Nozzle	Flow meter	Duty cycle	Wei-ght	Packaging
			l/min	DC Volt	W	BSPG	Ø			min	kg	mm
090-6890-012	**900 l**	Gasolio	**60**	12	336	F1"-F1"	20	Aut.PA60	NO	40	103,60	1530X910X1150
090-6890-024	**900 l**	Gasolio	**60**	24	432	F1"-F1"	20	Aut.PA60	NO	40	103,60	1530X910X1150
090-6891-012	**900 l**	Diesel	**60**	12	336	F1"-F1"	20	Aut.PA60	YES	40	104,10	1530X910X1150
090-6891-024	**900 l**	Diesel	**60**	24	432	F1"-F1"	20	Aut.PA60	YES	40	104,10	1530X910X1150

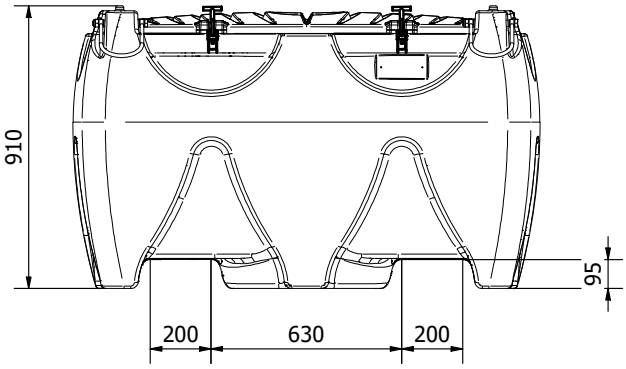

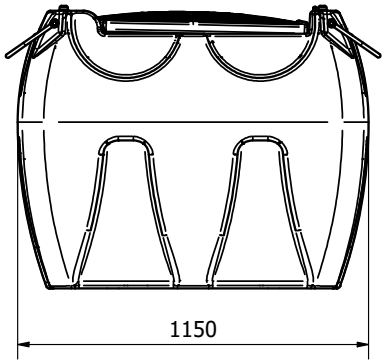

DIESEL-DEF-AdBlue® TANK
DEF-AdBlue® “Diesel-DEF-AdBlue® Tank 900+100”

Combined tank for Diesel and DEF-AdBlue® transport for private use in partial exemption paragraph 1.1.3.6 ADR (see ADR Regulation at page 242). Made of polyethylene with reinforced lockable lid. Diesel compartment with 2’’ aluminium filling plug and integrated 3 effects safety valve, internal breakwater bulkheads are integrated to grant the maximum security during the transport. DEF-AdBlue® compartment with 2’’ polyethylene plug. Complete with tank level indicator and suction filter only for Diesel compartment. The tank is provided with chamfers to be lifted when it is full and grips to be lifted when empty. It is equipped with slots for positioning the fastening belts at the support base. Diesel and DEF-AdBlue® compartments are supplied with 4 m long cable with pincers for the connection to the power battery supply.

“Diesel-DEF-AdBlue® Tank” series composed by:

Art. 090-6900-000 Only 900 l Tank + 100 l

Art. 091-5081-060 12V Pump - power cable (sec. 4 mmq, 4 m lenght) with pincers and fuse - 60 l/min

Art. 098-6100-012 DEF-AdBlue® submerged pump 12V-25 l/min power cable (sec.2,5 mmq. 1 m lenght) with switch

Art. 092-5124-000 Digital turbine flow meter MEC 24 min/max flow rate 7/120 l/min

Art. 908-0516-060 Connection hose ø 20 mm M-M 1” 6 m lenght for diesel

Art. 921-0500-060 Delivery hose EPDM ø 19x27 mm M-M 6 m lenght for DEF-AdBlue®

Art. 099-5199-000 Manual plastic nozzle “AD90” Flow rate 90 l/min

Art. 093-5210-000 Automatic nozzle PA60 Flow rate 70 l/min

DIESEL-DEF-AdBlue® TANK
DEF-AdBlue® “Diesel-DEF-AdBlue® Tank 900+100”

Ref.	Descrip.	Liquid	Flow rate	Voltage	Power	Inlet-outlet	Conn. hose	Nozzle	Flow meter	Duty cycle	Wei-ght	Packaging
			l/min	DC Volt	W	BSPG	Ø			min	kg	mm
	900 l	Diesel	**60**	12	336	F1"-F1"	20	Aut.PA60	NO	40	113,60	1530X910X1150
090-6900-012	Tank 900 + 100											
	100 l	DEF	**15**	12	26		19	Man.AD90	NO	-		
	900 l	Diesel	**60**	12	336	F1"-F1"	20	Aut.PA60	YES	40	114,00	1530X910X1150
090-6901-012	Tank 900 + 100											
	100 l	DEF	**15**	12	26		19	Man.AD90	NO	-		

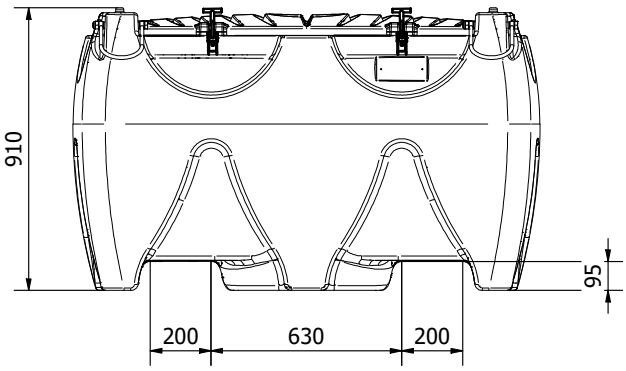

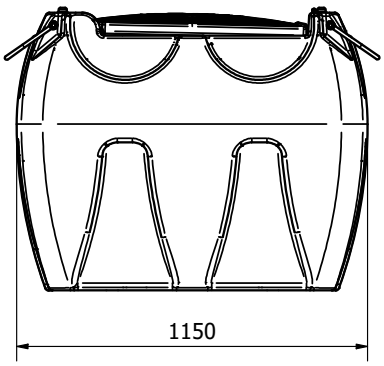

TANK FOR DIESEL TRANSPORT “Caddy”

Rigid polyethylene tank for diesel transport for private and professional use in total exemption for ADR (see ADR Regulation at page 242), perfect for refuelling of small operative vehicles, light-duty or recreational vehicles. It is equipped with run-flat wheels and suitable for moving on any ground. They have compact dimension for easy moving. Every tank can be filled vertically or horizontally, with the same fuel quantity. Provided with nozzle holder bracket, sphere relief valve with swiveling joint, filling plug with anti-spill vent valve.

“Caddy” series composed by:

Art. 090-6055-M00 Wheeled Caddy Tank 55 l diesel

Art. 090-6110-M00 Wheeled Caddy Tank 110 l diesel

Art. 027-3720-000 Alluminium manual rotary pump

Art. 908-0500-040 Antistatic rubber hose Ø 20 mm 4 m lenght

Art. 093-5200-000 Manual nozzle “MC 80” Flow rate 80 l/min

TANK FOR DIESEL TRANSPORT “Caddy”

55 l

110 l

Ref.	Descrip.	Flow rate for 100 revolutions		Width	Depth	Height	Nozzle	Weight	Packaging
		l	USG	mm	mm	mm		kg	mm
090-6055-M00	Caddy 55 l	**38**	10	460	360	900	Manual	9,00	1000X500X500
090-6110-M00	Caddy 110 l	**38**	10	460	440	1100	Manual	13,00	1200X500X500

DOUBLE-WALL TANK FOR DIESEL “Multitank”

Double-wall tanks in HDPE with integrated galvanised steel foil, palletised base. Equipped with level indicator, visual leaks detector, built-in transport handles. Tanks suitable for stocking of diesel, bio-diesel, for professional or private use. Approved for indoor installing and proper for filling with nozzles.

Hose reel, pump, nozzle and accessories are not included

Ref.	Descrip.	Capacity	Width	Depth	Height	Weight	Packaging
		l	mm	mm	mm	kg	mm
090-8070-000	Multitank	**700**	1135	757	1185	65,00	1135x757x1190
090-8100-000	Multitank	**1000**	1135	757	1590	80,00	1135x757x1590
090-8200-030	Supp.bracket	**-**	727	370	114	12,50	745x390x150

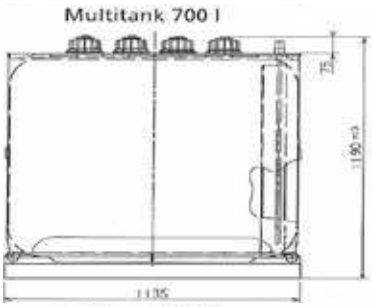

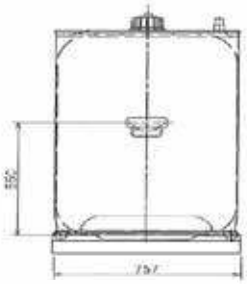

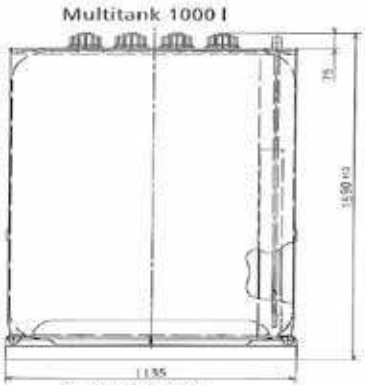

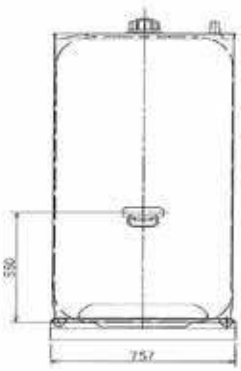

POLYETHYLENE TANK FOR DIESEL AND DEF-AdBlue® “Tank in tank”

Double-wall rigid polyethylene tank for diesel and DEF-AdBlue® for professional and private use, with built-in retention bucket, UV protection, anti-odor barrier SMP and seal of quality proofed barrier. Tank’s accessory: support to install the DEF-AdBlue® and diesel “Compact” kit.

Ref.	Descrip.	Flow rate	Width	Depth	Height	Weight	Packaging
		l	mm	mm	mm	kg	mm
090-9100-000	Tank in Tank	**1000**	1420	660	1685	59,00	1420x660x1685
090-9150-000	Tank in Tank	**1500**	1720	770	1720	90,00	1720x770x1720
090-9200-000	Tank in Tank	**2000**	2200	770	1700	145,00	2200x770x1700
097-9900-000	Supp.bracket	**-**	571	382	79	5,00	572x383x90
099-6530-000	Suction kit AdBlue®		**-**	**-**	1685	4,80	880x150x150
095-5460-000	Suction hose kit for diesel		**-**	**-**	2000	1,80	350x350x120

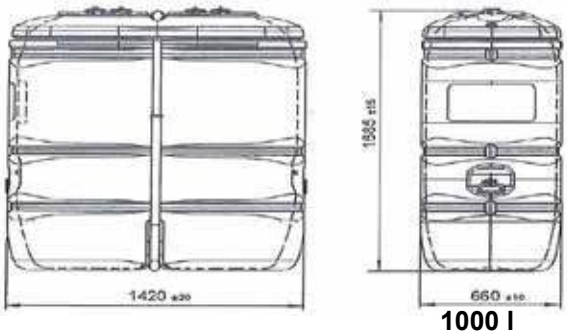

1000 l

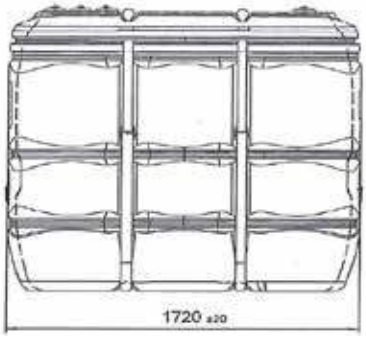

support bracket

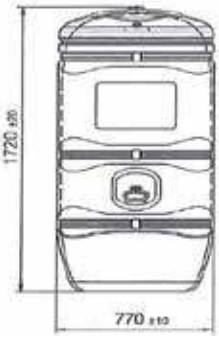

1500 l

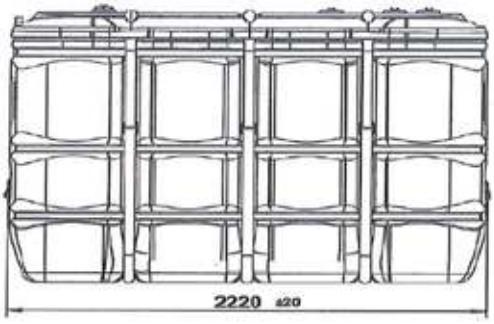

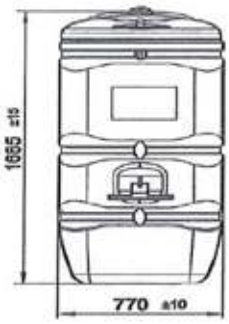

2000 l

097-9900-000

WHEELED FILTER GROUP FOR DIESEL “MecFilter”

Filter group with double filtering for diesel absorbing water and impurities. The high efficiency allows the filtering of large quantity of diesel in a single operation. The first stage with filtering capacity equal to a 125 µ, second stage with filtering capacity equal to 30 µ with water separating. Group equipped with delivery hose and suction hose. Big diameter wheels suitable for moving on every ground, solid structure in painted tubular.

“MecFilter” series composed by:

Art. 091-5081-060 12V Pump - power cable (sec. 4 mmq, 4 m lenght) with pincers and fuse - 60 l/min

Art. 091-6100-060 Electric pump AC 230V 50Hz MEC-60 l/min
Art. 091-6102-070 Electric pump AC 115V 60Hz MEC-70 l/min

Art. 908-0516-040 Connection hose ø 20 mm M-M 1” 4 m lenght

Art. 095-5450-040 Suction kit with PVC hose

Art. 093-5200-000 Aluminium manual nozzle MC80 Flow rate 80 l/min

Art. 094-5250-030 Water separating delivery filter for diesel 30 µ - 70 l/min
Art. 094-5251-030 Cartridge for water separating delivery filter for diesel 30 µ

Art. 094-5255-125 Delivery filter with stainless steel cartridge for diesel 125 µ - 100 l/min

WHEELED FILTER GROUP FOR DIESEL “MecFilter”

Ref.	Descrip.	Flow rate	Voltage	Power	Conn. hose	Inlet-Outlet	Nozzle	Weight	Packaging
	MecFilter	l/min	AC V./Hz DC Volt	W	Ø mm lenght m	BSPG		kg	mm
090-6000-230	Diesel Filter	**60**	230/50	460	20 / 4m	F 1" - F 1"	Manual	46,00	530X520X1110
090-6000-115	Diesel Filter	**70**	115/60	575	20 / 4m	F 1" - F 1"	Manual	46,00	530X520X1110
090-6000-012	Diesel Filter	**60**	12	336	20 / 4m	F 1" - F 1"	Manual	45,00	530X520X1110

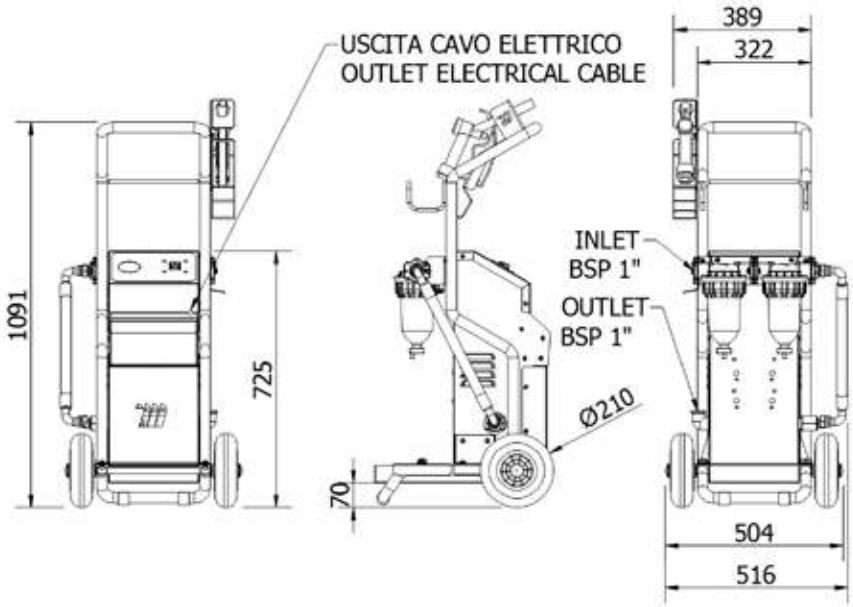

WHEELED FILTER GROUP FOR OIL “MecFilter”

Filter group with double filtering for oil and impurities. The high efficiency allows the filtering of large quantity of oil in a single operation. The first stage with filtering capacity equal to a 125 µ, second stage with filtering capacity equal to 10 µ. Group equipped with delivery hose and suction hose. Big diameter wheels suitable for moving on every ground, solid structure in painted tubular.

“MecFilter” series composed by:

Art. 091-5500-025 Electric pump for oils and lubricants 230V-50Hz 25 l/min

Art. 095-5450-040 Connection hose ø 20 mm M-M 1” 4 m lenght

Art. 095-5450-040 Suction kit with PVC hose

Art. 093-5200-000 Aluminium manual nozzle MC80 Flow rate 80 l/min

Art. 094-5255-125 Delivery filter with stainless steel cartridge for oil 125 µ - 100 l/min

Art. 094-5280-010 Oil filter 100 l/min 10 µ - Connection F 1”

Art. 094-5281-010 Cartridge for oil filter 10 µ

WHEELED FILTER GROUP FOR OIL“MecFilter”

Ref.	Descrip.	Flow rate	Voltage	Power	Conn. hose	Inlet-Outlet	Nozzle	Weight	Packaging
	MecFilter	l/min	AC V./Hz	W	Ø mm lenght m	BSPG		kg	mm
090-6010-230	Filtro Olio	**25**	230/50	850	20 / 4m	F 1" - F 1"	Manual	52,00	530X520X1110

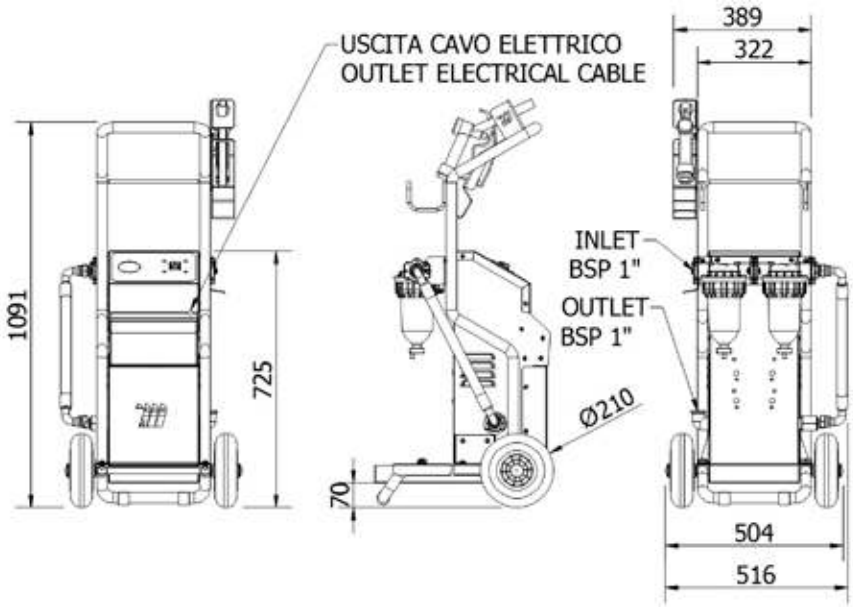

WHEELED FILTER GROUP FOR OIL / DIESEL “EcoFilter”

Filter group for oil and grease absorbing water and impurities. The high efficiency allows the filtering of large quantity of diesel in a single operation. Group equipped with delivery hose and suction hose. Big diameter wheels suitable for moving on every ground, solid structure in painted tubular.

“EcoFilter” series composed by:

Art. 091-6100-060 Electric pump for diesel AC 230V 50Hz MEC-60 l/min

Art. 091-6102-070 Electric pump for diesel AC 115V 60Hz MEC-70 l/min

Art. 091-5500-025 Electric pump for oils and lubricants 230V-50Hz 25 l/min

Art. 908-0516-040 Connection hose ø 20 mm M-M 1” 4 m lenght

Art. 095-5450-040 Suction kit with PVC hose

Art. 093-5200-000 Aluminium manual nozzle MC80 Flow rate 80 l/min

Art. 094-5240-000 Water separating delivery filter for diesel/oil 70 l/min

Art. 094-5280-010 Oil filter 100 l/min 10 µ - Connection F 1”

Art. 094-5281-010 Cartridge for oil filter 10 µ

WHEELED FILTER GROUP FOR OIL / DIESEL “EcoFilter”

090-6020-230

090-6021-230

Ref.	Descrip.	Flow rate	Voltage	Power	Conn. hose	Inlet-Outlet	Nozzle	Weight	Packaging
	EcoFilter	l/min	AC V./Hz	W	Ø mm lenght m	BSPG		kg	mm
090-6020-230	Diesel Filter	**60**	230/50	440	20 / 4m	F 1" - F 1"	Manual	24,00	990X350X405
090-6020-115	Diesel Filter	**70**	115/60	650	20 / 4m	F 1" - F 1"	Manual	24,00	990X350X405
090-6021-230	Oil Filter	**25**	230/50	850	20 / 4m	F 1" - F 1"	Manual	29,75	990X350X405

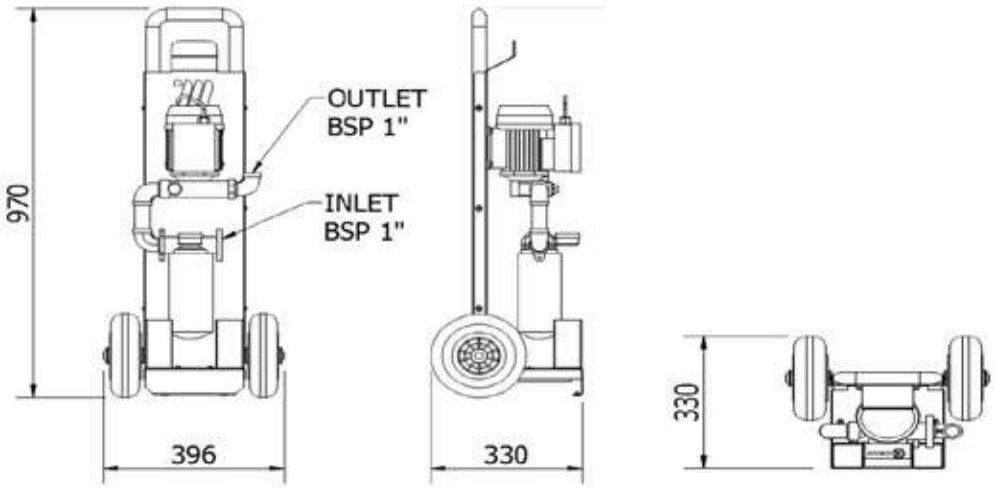

BATTERY ELECTRIC PUMPS FOR DIESEL FUEL TRANSFER

Battery electric vane self-priming pump 12 or 24V direct electricity, constitued by cast iron body, sintered steel impeller and acetyl resin vane. Built-in by-pass valve and stainless steel filter.

Battery electric pump 45 l for diesel transfer equipped with:

Power cable 2 m lenght sec. 2,5 mmq with pincers and fuse
Power cable 4 m lenght sec. 2,5 mmq with pincers and fuse
Self-priming rotary electric pump
Cast iron body
By-pass valve
DC engine
Stainless steel filter 100 micron
Motor protection rating IP55
Max by-pass valve pressure 1,5 bar

Ref.	Flow rate	Voltage	Power	Electri-city	Cable lenght	Inlet-Outlet	Duty cycle	Max suction height	Wei-ght	Packaging
	l/min	DC Volt	W	A	m	BSPG	min	m	kg	mm
091-5080-045	**45**	12	264	22	2	F 1"-F 1"	S2 30	3	5,40	245X180X190
091-5082-045	**45**	24	312	12	2	F 1"-F 1"	S2 30	3	5,40	245X180X190
091-5081-045	**45**	12	264	22	4	F 1"-F 1"	S2 30	3	5,70	245X180X190
091-5083-045	**45**	24	312	12	4	F 1"-F 1"	S2 30	3	5,70	245X180X190

Dimensions:

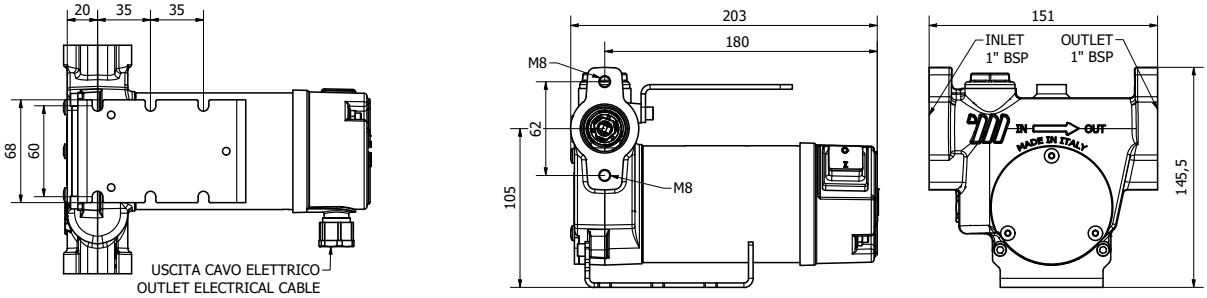

Battery electric vane self-priming pump 12 or 24V direct electricity, constitued by cast iron body, sintered steel impeller and acetyl resin vane. Built-in by-pass valve and stainless steel filter.

Battery electric pump 60 l for diesel transfer equipped with:

Power cable 4 m lenght sec. 4 mmq with pincers and fuse
Power cable 6 m lenght sec. 4 mmq with pincers and fuse
Self-priming rotary electric pump
Cast iron body
By-pass valve
DC Engine
Stainless steel filter 100 micron
Motor protection rating IP55
Max by-pass valve pressure 1,5 bar

Ref.	Flow rate	Voltage	Power	Electri-city	Cable lenght	Inlet-Outlet	Duty cycle	Max suction height	Wei-ght	Packaging
	l/min	DC Volt	W	A	m	BSPG	min	m	kg	mm
091-5081-060	**60**	12	336	28	4	F 1"-F 1"	S2 30	3	6,80	245X180X190
091-5083-060	**60**	24	432	18	4	F 1"-F 1"	S2 30	3	6,80	245X180X190
091-5084-060	**60**	12	336	28	6	F 1"-F 1"	S2 30	3	7,10	245X180X190
091-5085-060	**60**	24	432	18	6	F 1"-F 1"	S2 30	3	7,10	245X180X190

Dimensions:

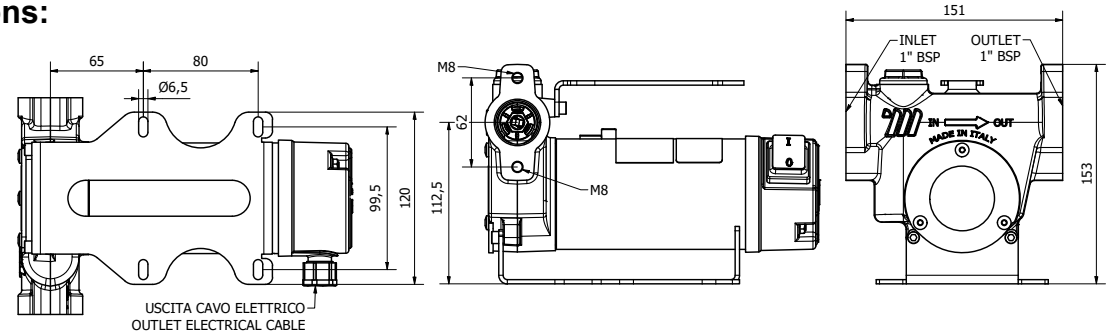

BATTERY ELECTRIC PUMPS FOR DIESEL FUEL TRANSFER

Battery electric vane self-priming pump 12 or 24V direct electricity, constitued by cast iron body, sintered steel impeller and acetyl resin vane. Built-in by-pass valve and stainless steel filter.

Battery electric pump 85 l for diesel transfer equipped with:

Power cable 4 m lenght sec. 6 mmq with pincers and fuse
Power cable 6 m lenght sec. 6 mmq with pincers and fuse
Self-priming rotary electric pump
Cast iron body
By-pass valve
DC Engine
Stainless steel filter 100 micron
Motor protection rating IP55
Max by-pass valve pressure 1,5 bar

Ref.	Flow rate	Voltage	Power	Electri-city	Cable Lenght	Inlet-Outlet	Duty cycle	Max suction height	Wei-ght	Packaging
	l/min	DC Volt	W	A	m	BSPG	min	m	kg	mm
091-6081-085	**85**	12	432	40	4	F 1"-F 1"	S2 30	3	9,80	310X200X210
091-6083-085	**85**	24	432	32	4	F 1"-F 1"	S2 30	3	9,80	310X200X210
091-6084-085	**85**	12	432	40	6	F 1"-F 1"	S2 30	3	10,20	310X200X210
091-6085-085	**85**	24	432	32	6	F 1"-F 1"	S2 30	3	10,20	310X200X210

Dimensions:

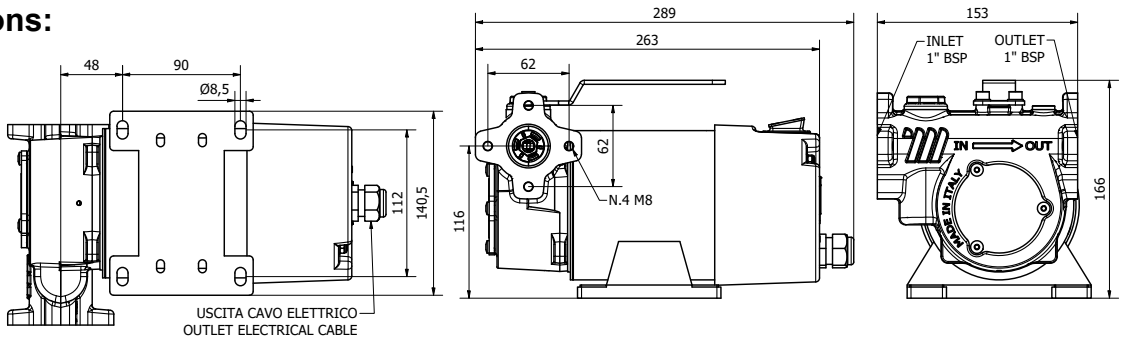

Electric pumps 230V, volumetric self-primig vane. They are equipped with asynchronous induction self-ventilated engine with motor protection rating IP55, insulaton class type F, internal protection. Built-in by-pass valve and stailess steel filter.

Electric pump for diesel fuel transfer 60 l equipped with:

Power cable 2 m lenght, Schuko plug
Self-priming rotary electric pump
Cast iron body
By-pass valve
AC Engine
Stainless steel filter 100 micron
Motor protection rating IP55
Max by-pass valve pressure 1,5 bar

Ref.	Flow rate	Voltage	Power	Electricity	RPM	Lenght Cable	Inlet-outlet	Duty cycle	Weight	Packaging
	l/min	AC V./Hz	W	A	rev. min	m	BSPG	min	kg	mm
091-6100-060	**60**	230/50	440	2,1	2850	2	F 1"-F 1"	Contin.	8,35	245X180X190
091-6101-060	**60**	230/60	690	2,5	3470	2	F 1"-F 1"	Contin.	8,35	245X180X190

Dimensions:

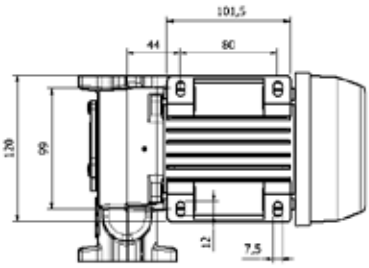

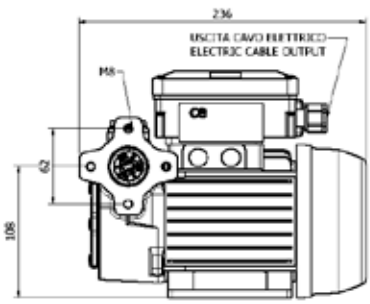

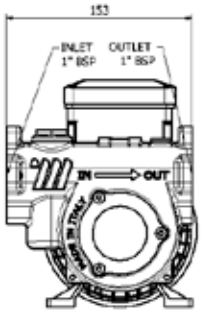

Electric pumps 115 - 230V, volumetric self-primig vane. They are equipped with asynchronous induction self-ventilated with motor protection rating IP55, insulation class type F, internal protection. Built-in by-pass valve and stainless steel filter.

Electric pump 70 l for diesel fuel transfer equipped with:

Power cable 2 m lenght, Schuko plug
Self-priming rotary electric pump
Cast iron body
By-pass valve
AC Engine
Stainless steel filter 100 micron
Motor protection rating IP55
Max by-pass valve pressure 1,5 bar

Ref.	Flow rate	Voltage	Power	Electricty	RPM	Cable lenght	Inlet-outlet	Duty cycle	Weight	Packaging
	l/min	AC V./Hz	W	A	rev. min	m	BSPG	min	kg	mm
091-6100-070	**70**	230/50	480	2,6	2950	2	F 1"-F 1"	Contin.	9,30	300X215X230
091-6102-070	**70**	115/60	650	6,7	3510	2	F 1"-F 1"	Contin.	9,60	300X215X230

Dimensio

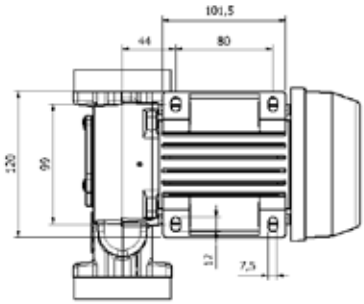

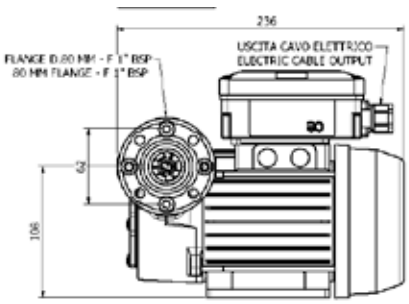

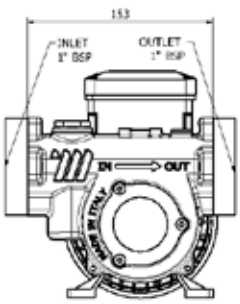

Electric pump 115 o 230V, volumetric self-primig vane. They are equipped with asynchronous induction self-ventilated engine with motor protection rating IP55, insulaton class type F, internal protection. Built-in by-pass valve and stailess steel filter.

Electric pump 100 l for diesel fuel transfer equipped with:

Power cable 2 m lenght, Schuko plug
Self-priming rotary electric pump
Cast iron body
By-pass valve
AC engine
Stainless steel filter 100 micron
Motor protection rating IP55
Max by-pass valve pressure 1,5 bar

Ref.	Flow rate	Voltage	Power	Electricity	RPM	Cable lenght	Inlet-outlet	Duty cycle	Weight	Packaging
	l/min	AC V./Hz	W	A	rev. min	m	BSPG	min	kg	mm
091-6100-100	**100**	230/50	800	3,8	1450	2	F 1"-F 1"	Contin.	14,50	310X200X210
091-6101-100	**100**	230/60	950	5,2	1745	2	F 1"-F 1"	Contin.	14,50	310X200X210
091-6102-100	**100**	115/60	1045	9,8	1750	2	F 1"-F 1"	Contin.	14,80	310X200X210

Dimensions:

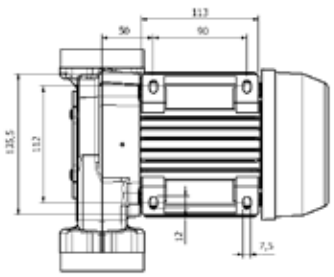

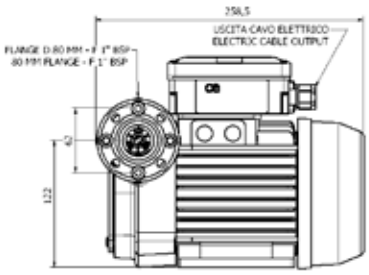

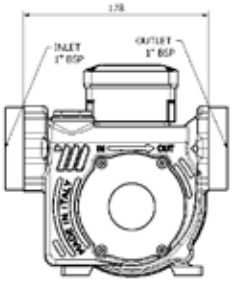

Electric pump 230V, volumetric self-primig vane. They are equipped with asynchronous induction self-ventilated engine with motor protection rating IP55, insulaton class type F, internal protection. Built-in by-pass valve and stailess steel filter.

Electric pump 150 l for diesel fuel transfer equipped with:

Power cable 2 m lenght, Schuko plug
Self-priming rotary electric pump
Cast iron body
By-pass valve
AC engine
Stainless steel filter 100 micron
Motor protection rating IP55
Max by-pass valve pressure 1,5 bar

Ref.	Flow rate	Voltage	Power	Electricity	RPM	Cable lenght	Inlet-outlet	Duty cycle	Weight	Packaging
	l/min	AC V./Hz	W	A	rev. min	m	BSPG	min	kg	mm
091-6100-150	**150**	230/50	2780	15,2	2900	2	F-F 1 1/"4	Continuo	16,53	360X210X260

Dimensions:

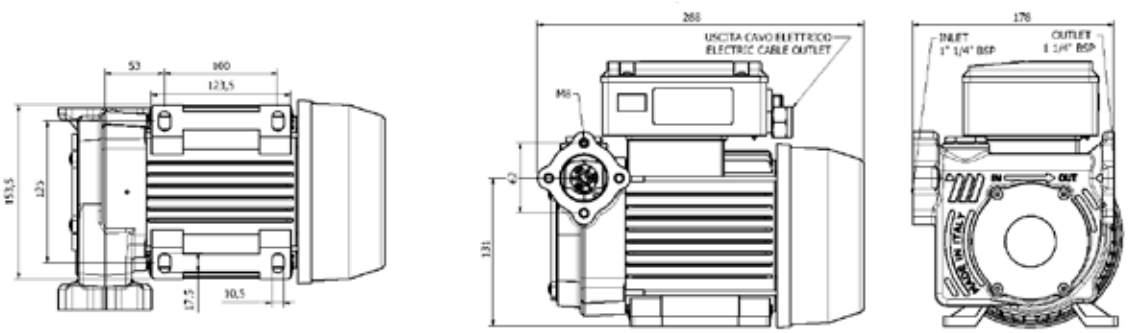

HIGH DELIVERY DIESEL ELECTRIC PUMP MEC-550

Volumetric self-priming monoblock 230V electric pump, with open impeller and volumetric palettes. It's equipped with two-poles induction self-ventilated motor with IP55 rate protection, F type isolation class, thermal protection. The check valve inside the suction outlet avoids the syphon effect when stopping and assures the automatic self-repriming. Every time the pump is turned on, it self-reprimes even if it is partially filled and if the suction hose is completely empty.

High delivery diesel electric pump MEC-550 - 550 l/min

Equipped with:

Power cable 2 m lenght, Schuko plug
Self-priming monoblock electric pump
Cast iron body
By-pass valve - AC Engine
Stainless steel 100 micron filter
Motor protection rating IP55
Total suction lift up to 7 m

Ref.	Flow rate	Voltage	Power	Electricity	RPM	Cable length	Inlet-Outlet	Duty cycle	Weight	Packaging
	l/min	AC V./Hz	W	A	rev. min	m	BSPG	min	kg	mm
091-6100-550	**550**	230/50	1500	9,5	2850	2	F 2"- F 2"	Contin.	26,60	230x416x346
091-6101-550	**550**	230/60	1500	9,5	3450	2	F 2"- F 2"	Contin.	26,60	230x416x346

Dimensions:

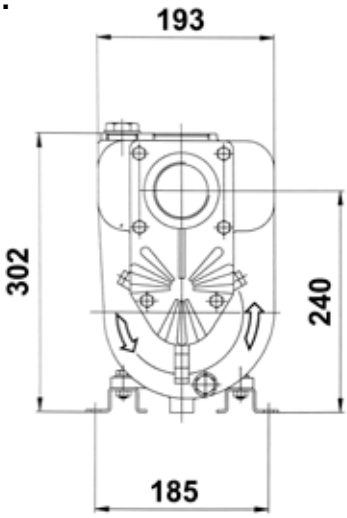

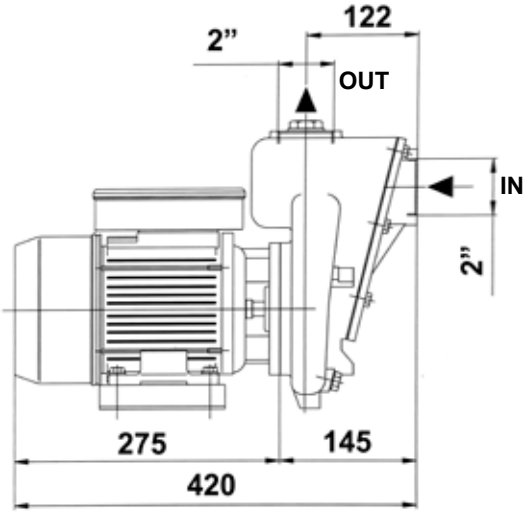

ELECTRIC PUMPS FOR DIESEL FUEL TRANSFER “CarbuMec”

Electric pumps “CarbuMec” available in 4 versions: 230V, 110V, 12V, 24V. They are composed by plastic body and anti-siphon security system. In case of accidental damage of the delivery hose or of the delivery nozzle, the anti-siphon security system provides for avoiding the liquid’s spread in the workig space for sipho-effect.

Electric pump 35/40 l for diesel fuel transfer equipped with:

Plastic telescopic suction hose M1”
Plastic body
Protection rate IPx4
Switch ON/OFF
Versions 12V and 24V equipped with pincers and batteries
Pump body thread M64x2 and 2”

Ref.	Flow rate	Voltage	Power	Electri-city	Cable lenght	Duty cycle	Max suction height	Weight	Packaging
	l/min	AC V./Hz DC Volt	W	A	m	min	m	kg	mm
091-5600-040	**40**	230/50	224	1,23	3	Contin.	3	2,70	410X400X270
091-5602-040	**40**	115/60	320	3,64	3	Contin.	3	2,70	410X400X270
091-5610-035	**35**	12	110	6,32	3	S2-30	3	2,70	410X400X270
091-5612-035	**35**	24	135	3,70	3	S2-30	3	2,70	410X400X270

Dimensions:

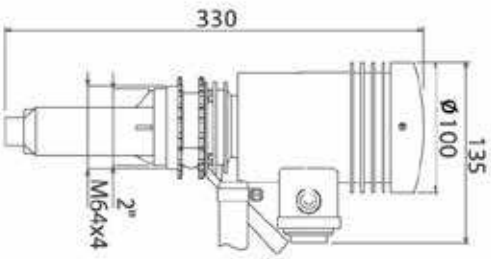

HIGH FLOW HORIZONTAL MOTOR PUMP GROUPS FOR DIESEL, PETROL AND KEROSENE “ATEX / EExd”

Horizontal motor pump sets, integrated by-pass and 80 dB noise level, flanged reducer/motor coupling. High flow rate vane pumps on base, self-priming, volumetric, constant flow rate, for heavy duty. The transfer is fast, uniform and silent. It is specifically designed for the transfer of large volumes, continuous S-1 service, for filling and emptying fuel tanks: diesel, petrol and kerosene. Degree of protection IP55, insulation class type F, ATEX certification EExd IIBT4.

High flow horizontal motor pump groups for diesel, petrol and kerosene

Flanged reducer/motor coupling
Integrated by-pass valve
Protection degree IP55,
Insulation class type F
Operating pressure 3.5 bar
ATEX EExd IIBT4 Certification

Ref.	Flow rate	Voltage	Power	Turn speed pump	Turn speed motor	Inlet-Outlet	Connection through flange	Weight	Packaging
	l/min	AC V./50 Hz	KW	rpm	rpm	BSPG	-	kg	mm
091-5200-200	**200**	230-400 triphasic	2,2	740	1500	F 2"- F 2"	1” 1/2”	85,5	880x325x285
091-5200-300	**300**	230-400 triphasic	2,2	400	1500	F 3"- F 3"	2” 1/2”	125,00	1000x335x345
091-5200-500	**500**	230-400 triphasic	4,0	640	1500	F 3”- F 3”	2” 1/2”	148,5	1050x365x345
091-5201-000	**1000**	400-660 triphasic	7,5	640	1500	F 4”- F 4”	3”	251,8	1264x420x405

ELECTRIC PUMPS FOR OIL TRANSFER “VISCOMEC”

12V-24V DC electric pumps with gear rotor for the transfer of oils and lubricants with viscosity up to 600cSt (oil SAE 80W90).

They are suitable for applications where it is necessary to transfer oil from drums.

Art. 091-5480-010
Electric pump for oils and lubricants transfer
12V 10l/min operating pressure 4-6 bar

Power cable 2 m lenght, with pincers and protection fuse
Self-priming rotary electric pump
Aluminum body
Sintered steel gears
By-pass valve
DC Engine
Motor protection rating IP55

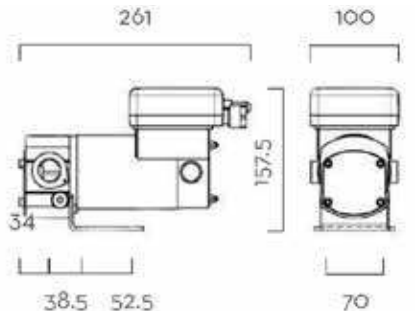

Art. 091-5482-010
Electric pump for oils and lubricants transfer
24V 10l/min operating pressure 4-6 bar

Power cable 2 m lenght, with pincers and protection fuse
Self-priming rotary electric pump
Aluminum body
Sintered steel gears
By-pass valve
DC Engine
Motor protection rating IP55

Volumetric electric pumps and 230V for oils and lubricants transfer, the suction filter is supplied.

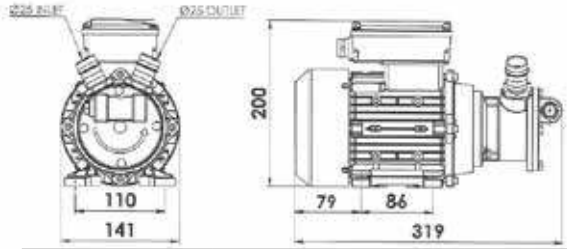

Art. 091-5500-030
Electric pump for oils and lubricants (600 cSt)
230V-50/60Hz 30 l/min

Power cable 2 m lenght, Schuko plug
Self-priming rotary electric pump
Aluminum body
By-pass valve
AC Engine
Stainless steel filter100 micron
Motor protection rating IP55

Ref.	Flow rate	Voltage	Power	Electri-city	Cable leght	Inlet-outlet	Duty cycle	RPM	Wei-ght	Packaging
	l/min	AC V./Hz DC Volt	W	A	m	BSPG	min	min	kg	mm
091-5480-010	**10**	12	300	35	2	F 3/4" BSP	S2-30	2900	4,90	345X175X255
091-5482-010	**10**	24	300	18	2	F 3/4" BSP	S2-30	2900	4,90	345X175X255
091-5500-030	**30**	230/50-60	850	3	2	F 1" BSP	S2-30	1800	10,00	390X190X250

230V AC self-priming volumetric vane electric pumps for oils and lubricants transfer with viscosity up to 500 cSt. They are equipped with asynchronous self-ventilated induction electric engine with IP55 protection, F type insulation class, thermal protection. Integrated and adjustable by-pass valve to grant the functioning also when you don't press the nozzle's trigger. Noise inferior to 70 dB.

Art. 091-5500-025
Electric pump for lubricants transfer of 230V-50HZ 25 l/min

Art. 091-5500-050
Electric pump for lubricants transfer of 25 l/min - 50 l/min

Supply cable L. 2 mt, with Schuko plug
Rotative self-priming electric pump
Cast iron body By-pass valve
AC engine Max pressure 6 bar
Level of engine protection

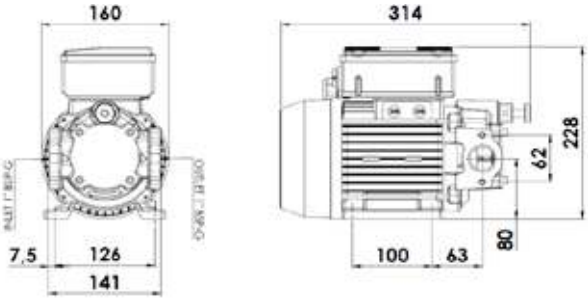

Ref.	Flow rate	Voltage	Power	Electri-city	Cable length	Inlet Outlet	Duty cycle	Weight	Packaging
	l/min	AC V./Hz	W	A	m	BSPG	min	kg	mm
091-5500-025	**25**	230/50	828	4,6	2	F 1"-F 1"	contin.	14,10	390X190X250
091-5500-050	**50**	230/50	1081	7	2	F 1"-F 1"	contin.	14,10	390X190X250

Art. 091-6000-000
Universal support plate with handle, suitable for 230V / 115V pumps:

Pump not included

Ref.	Description	Dimensions	Weight	Packaging
		width x depth x height (mm)	kg	mm
091-6000-000	Support plate with handle	234x320x370	4,00	245x335x110

Mechanical volumetric flow meter able to provide high degree of precision for the measurament of diesel for private use. Equipped with a totalizer and a partial meter, resettable with side knob, allowing the user to change the output direction of the fuel as needed. The meters are also fitted with regulation screws for precision adjustment. The flow meter can be applied to motor pumps or for gravity.

Art. 092-5103-000 Mechanical volumetric flow meter 3C
min-max flow rate 20-120 l/min

6 digits totalizer
3 digits partal totalizer (max 999 l)
Allowed fluids: **diesel**, low viscosity oil (2-2,000cSt)

Art. 092-5104-000 Mechanical volumetric flow meter 4C
min-max flow rate 20-120 l/min

8 digits totalizer
4 digits partal totalizer (max 9999 l)
Allowed fluids: **diesel**, low viscosity oil (2-2,000cSt)

Art. 092-5104-G00 Mechanical volumetric flow meter for gallons 4C
min-max flow rate 5-32 U.S. gal/min

8 digits totalizer
4 digits partal totalizer (max 9999 g)
Allowed fluids: **diesel**, low viscosity oil (2-2,000cSt)

Ref.	Flow rate	Pressure	Accuracy	Inlet - Outlet	Weight	Packaging
	l/min	bar	%	BSPG	Kg	mm
092-5103-000	**20-120 l/min**	10	+/- 1	F 1" - F 1"	2,00	220X150X220
092-5104-000	**20-120 l/min**	10	+/- 1	F 1" - F 1"	2,00	220X150X220
092-5104-G00	**5-32 U.S. gal**	10	+/- 1	F 1" - F 1"	2,00	220X150X220

Mechanical flow meter with oval gears, it enables a highly precise diesel measurement for private usage.It has a partial and totalizer counter, it can be put to zero through a lateral knob. It's easy to install and calibrate.The flow meter can be installed on electric pumps or work by gravity.

OVAL GEARS

Art. 092-5106-110 Mechanical flow meter MGM-110
min-max flow rate 10-110 l/min

Art. 092-51G6-029 Mechanical flow meter MGM-29
min-max flow rate 2,64-29,00 U.S. gal/min
8 digits totalizer (non-resettable)
4 digits partal totalizer (resettable)
Allowed fluids: **diesel**, low viscosity oil (2-2,000cSt)
Ambient temperature: -10°C/+50°C

Art. 092-5106-250 Mechanical flow meter MGM-250
min-max flow rate 15-250 l/min

Art. 092-51G6-066 Mechanical flow meter MGM-66
min-max flow rate 4,00-66,00 U.S. gal/min
8 digits totalizer (non-resettable)
4 digits partal totalizer (resettable)
Allowed fluids: **diesel**, low viscosity oil (2-2,000cSt)
Ambient temperature: -10°C/+50°C

Art. 092-5106-400 Mechanical flow meter MGM-400
min-max flow rate 30-400 l/min

Art. 092-51G6-105 Mechanical flow meter MGM-105
min-max flow rate 8,00-105,00 U.S. gal/min
8 digits totalizer (non-resettable)
4 digits partal totalizer (resettable)
Allowed fluids: **diesel**, low viscosity oil (2-2,000cSt)
Ambient temperature: -10°C/+50°C

Ref.	Flow rate	Pressure	Accuracy	Inlet - Outlet	Weight	Packaging
	l/min	bar	%	BSPG	Kg	mm
092-5106-110	**10-110 l/min**	20	+/- 1	F 1" - F 1"	1,95	180X132X165
092-5106-250	**15-250 l/min**	20	+/- 1	F 1.1/2" - F 1.1/2"	3,65	185X185X165
092-5106-400	**30-400 l/min**	20	+/- 1	F 2" - F 2"	5,36	195X230X165
092-51G6-029	**2,64-29 U.S. gal**	20	+/- 1	F 1" - F 1"	1,95	180X132X165
092-51G6-066	**4-66 U.S. gal**	20	+/- 1	F 1.1/2" - F 1.1/2"	3,65	185X185X165
092-51G6-105	**8-105 U.S. gal**	20	+/- 1	F 2" - F 2"	5,36	195X230X165

DIGITAL FLOW METERS

Turbine or with gears flow meters that feature high precision performance for the measurement of non-commercial use diesel. The software enables full control of dispensing system thank to the various functions featured. It can be applied on motor pumps or for gravity.

Art. 092-5124-000 Digital turbine flow meter MEC 24
min-max flow rate 7/120 l/min

6 digits totalizer (not resettable)
5 digits partial (resettable)
Allowed fluids: diesel, low viscosity oil (2-2,000cSt)

Art. 092-5130-000 Digital flow meter with gears MGE-110
min-max flow rate 5-110 l/min

7 digits totalizer (not resettable)
5 digits partial (resettable)
Allowed fluids: diesel, low viscosity oil (2-2,000cSt)

Art. 092-5140-000 Digital flow meter with gears MGE-250
min-max flow rate 10-250 l/min

7 digits totalizer (not resettable)
5 digits partial (resettable)
Allowed fluids: diesel, low viscosity oil (2-2,000cSt)

Art. 092-5150-000 Digital flow meter with gears MGE-400
min-max flow rate 20-400 l/min

7 digits totalizer (not resettable)
5 digits partial (resettable)
Allowed fluids: diesel, low viscosity oil (2-2,000cSt)

Ref.	Flow rate diesel	Pressure	Accuracy	Inlet-outlet	Weight	Packaging
	l/min	bar	%	BSPG	Kg	mm
092-5124-000	**7-120**	10	+/- 1	F 1" - F 1"	0,55	145X135X85
092-5130-000	**5-110**	50	+/- 0,5	F 1" - F 1"	1,00	150X140X85
092-5140-000	**10-250**	50	+/- 0,5	F 1.1/2" - F 1.1/2"	2,70	180X175X165
092-5150-000	**20-400**	50	+/- 0,5	F 2" - F 2"	4,30	193X145X141

Electronic pulsed volumetric flow meters that offer high precision performance for diesel measurement for private use.

Art. 092-5170-110 Mechanical pulsed flow meter MGI-110 HALL EFFECT

- min-max flow rate 5-110 l/min
- nr. 41 pulses/liter
- Voltage: 5 - 24 VDC
- Power: 0,15 - 0,72 W
- Intensity 30 mA
- 2 channels 90°

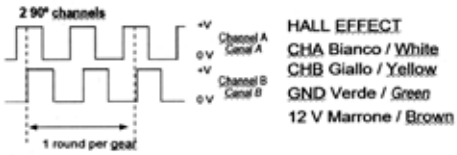

Art. 092-5171-110 Mechanical pulsed flow meter MGI-110 REED

- min-max flow rate 5-110 l/min
- nr. 41 pulses/liter
- Voltage: 28 VDC
- Power: 8 W
- Intensity 100 mA
- 2 channels 180°

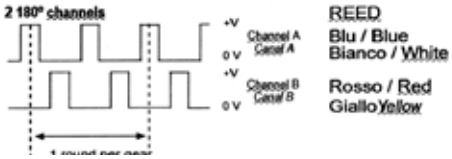

Art. 092-5170-250 Mechanical pulsed flow meter MGI-250 REED

- min-max flow rate 10-250 l/min
- nr. 11 pulses/liter
- Voltage: 28 VDC
- Power: 8 W
- Intensity 100 mA
- 2 channels 180°

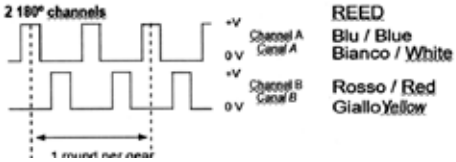

Art. 092-5170-400 Mechanical pulsed flow meter MGI-400 REED

- min-max flow rate 15-400 l/min
- nr. 5,5 pulses/liter
- Voltage: 28 VDC
- Power: 8 W
- Intensity 100 mA
- 2 channels 180°

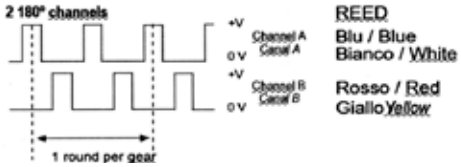

Ref.	Flow rate	Pressure	Accuracy	Inlet- Outlet	Weight	Packaging
	l/min	bar	%	BSPG	Kg	mm
092-5170-110	**5-110**	50	+/- 0,5	F 1" - F 1"	1,10	123X90X123
092-5171-110	**5-110**	50	+/- 0,5	F 1" - F 1"	1,10	123X90X123
092-5170-250	**10-250**	50	+/- 0,5	F 1.1/2” - F 1.1/2"	2,30	150X100X141
092-5170-400	**15-400**	50	+/- 0,5	F 2" - F 2"	4,30	193X145X141

Electronic control unit that offers high precision performance for the diesel measurement and delivery for private use.

Art. 092-5200-230 Electronic control unit MecGest 110/230V 50Hz
Software included
Preselection and multi-users consumption management

Art. 092-5220-000 Codified communication kit USB key reader for PC

Art. 092-5300-000 Red key - Manager - nr. 1 pc.

Art. 092-5300-001 Blue key - User - nr. 1 pc.

Art. 092-5300-010 Kit blue keys - Users- nr. 10 pc.

Art. 092-5350-001 Codified Kit Lan Connection USB-RS485

Art. 092-5402-100 Shielded signal cable 2 poles 100 m lenght

MANUAL DISPENSING NOZZLES FOR DIESEL TRANSFER

Manual dispensing nozzles made up of plastic and aluminium body, equipped with swivel connection. For their features, they can be applied on every transfer system, also operating for gravity.

Art. 093-5199-000 Manual plastic nozzle "MP120"
for diesel fuel transfer
Flow rate 120 l/min
Plastic body
Swivel connection F 1"

Art. 093-5200-000 Manual nozzle "MC80"
for diesel fuel transfer
Flow rate 80 l/min
Aluminium body
Swivel connection F 1"

Art. 093-5203-000 Aluminium manual nozzle with plastic handle "MC150"
for diesel fuel transfer
Flow rate 150 l/min
Aluminium ends
Plastic handle
Swivel connection F 1"

Ref.	Model	Fluid	Flow rate	Inlet	Weight	Ø End	Packaging
		type	l/min	BSPG	Kg	mm	mm
093-5199-000	MP120	Diesel	**120**	F 1"	0,28	29,00	400X175X57
093-5200-000	MC80	Diesel	**80**	F 1"	0,75	24,00	400X175X57
093-5203-000	MC150	Diesel	**150**	F 1"	1,00	25,00	400X175X57

AUTOMATIC DISPENSING NOZZLE FOR DIESEL TRANSFER

Automatic dispensing nozzles composed by aluminium body. Equipped with a device that shuts off the flow automatically when the tank is full. Suitable for quick and safe refuel, provided with swive-connection.

Art. 093-5210-000 Automatic nozzle "PA60"
for diesel fuel transfer
Flow rate 70 l/min
Aluminium body
Swivel connection F 1"

Art. 093-5215-000 Automatic nozzle "PA90"
for diesel fuel transfer
Flow rate 90 l/min
Aluminium body
Swivel connection F 1"

Art. 093-5220-000 Automatic nozzle "PA120"
for diesel fuel transfer
Flow rate 120 l/min
Aluminium body
Swivel connection F 1"

Art. 093-5220-180 Automatic nozzle "PA180"
for diesel fuel transfer
Flow rate 180 l/min
Aluminium body
Swivel connection F 1.1/2"

Ref.	Model	Fluid	Flow rate	Inlet	Weight	Ø End	Packaging
		type	l/min	BSPG	Kg	mm	mm
093-5210-000	PA60	Diesel	**70**	F 1"	1,3	24,00	400X175X57
093-5215-000	PA90	Diesel	**90**	F 1"	1,65	27,00	400X175X57
093-5220-000	PA120	Diesel	**120**	F 1"	1,69	30,00	400X175X57
093-5220-180	PA180	Diesel	**180**	F 1.1/2"	2,50	32,00	450X210X80

AUTOMATIC DISPENSING NOZZLE FOR DIESEL

Automatic dispensing nozzles composed by aluminium body. Equipped with a device that shuts off the flow automatically when the tank is full. Suitable for quick and safe refuel, provided with swivel connection.

Art. 093-5221-080 Automatic nozzle "ZPA80"
for diesel fuel transfer
Flow rate 80 l/min
Aluminium body
Swivel connection F 1"

Art. 093-5221-120 Automatic nozzle "ZPA120"
for diesel fuel transfer
Flow rate 120 l/min
Aluminium body
Swivel connection F 1"

Art. 093-5222-280 Automatic nozzle "PA280"
for diesel fuel transfer
Flow rate 280 l/min
Aluminium body
Swivel connection F 1.1/2"

Ref.	Model	Fluid	Flow rate	Inlet	Weight	Ø End	Packaging
		type	l/min	BSPG	Kg	mm	mm
093-5221-080	ZPA80	Diesel	**80**	F 1"	1,20	24,80	400X175X57
093-5221-120	ZPA120	Diesel	**120**	F 1"	1,65	31,00	400X175X57
093-5222-280	PA280	Diesel	**280**	F 1.1/2"	2,20	39,50	420x220x573

ACCESSORIES FOR AUTOMATIC DISPENSING DIESEL NOZZLES

Art. 093-5310-003 Cover for Automatic nozzle PA60 - Blue
Art. 093-5312-003 Cover for Automatic nozzle PA90/120 - Blue

Art. 093-5310-004 Cover for Automatic nozzle PA60 - Yellow
Art. 093-5312-004 Cover for Automatic nozzle PA90/120 - Yellow

Art. 093-5310-007 Cover for Automatic nozzle PA60 - Red
Art. 093-5312-007 Cover for Automatic nozzle PA90/120 - Red

Art. 093-5310-008 Cover for Automatic nozzle PA60 - Green
Art. 093-5312-008 Cover for Automatic nozzle PA90/120 - Green

Art. 093-5224-506 Swiveling connector PA60 M 3/4” - F 1”

Art. 093-5224-606 Swiveling connector PA120 M 1” - F 1”

Art. 093-5225-346 Swiveling connector ZPA80 with filter M 34x1,5 - F 1”
Art. 093-5225-426 Swiveling connector ZPA120 with filter M 42x1,5 - F 1”

Art. 093-5224-708 Swiveling connector PA180 M 1.1/4” - F 1. 1/2”
Art. 093-5224-808 Swiveling connector PA280 M 1.1/2” - F 1. 1/2”

Ref.	Model	Fluid	Flow rate	Inlet	Weight	Packaging
		type	l/min	BSPG	Kg	mm
093-5224-506	PA60	Diesel	70	M 3/4” - F 1"	0,50	50x50x60
093-5224-606	PA90/120	Diesel	120	M 1” - F 1"	0,50	50x50x60
093-5225-346	ZPA80	Diesel	80	M 34x1,5 - F 1"	0,40	50x50x60
093-5225-426	ZPA120	Diesel	120	M 42x1,5 - F 1"	0,50	50x50x60
093-5224-708	PA180	Diesel	180	M 1.1/4” - F 1.1/2”	0,80	70x70x80
093-5224-808	PA280	Diesel	280	M 1.1/2” - F 1.1/2”	0,80	70x70x80

WATER SEPARATING DELIVERY FILTERS

Water separating cartridge filter. The engines use the diesel delivered by the station, so the filter ensures their protection. It separates and absorbes the water in the delivered diesel.

Art. 094-5240-000 Water separating delivery filter
for diesel/gasoline 70 l/min
Inlet-outlet connetion F1”
Filtering capacity **30 µ**

Art. 094-5243-000 Water separating delivery filter 2 cartucce 30 µ
for diesel/gasoline 70 l/min

Art. 094-5245-000 Water separating delivery filter
for diesel/gasoline 150 l/min
Inlet-outlet connetion F1”
Filtering capacity **30 µ**

Art. 094-5248-000 Water separating transparent delivery filter
for diesel/gasoline 105 l/min
Inlet-outlet connection F1”
Filtering capacity **5 µ**

Art. 094-5248-025 Water separating transparent delivery filter
for diesel/gasoline 105 l/min
Inlet-outlet connection F1”
Filtering capacity **25 µ**

Art. 094-5300-060 Headboard filter holder
Flow rate 60/70 l/min
Inlet-outlet connetion F1”

Art. 094-5300-100 Headboard filter holder
Flow rate 100/150 l/min
Inlet-outlet connetion F1”

Ref.	Fluid	Flow rate	Filter capacity	Inlet	Weight	Packaging
	type	l/min	µ	BSPG	Kg	mm
094-5240-000	Diesel	**70**	30	F 1" - F 1"	1,45	200X225X135
094-5243-000	Diesel	**70**	30	-	2,44	390X285X140
094-5245-000	Diesel	**150**	30	F 1" - F 1"	2,41	170X170X355
094-5248-000	Diesel	**105**	5	F 1" - F 1"	2,80	225X185X325
094-5248-025	Diesel	**105**	25	F 1" - F 1"	2,80	225X185X325
094-5300-060	Diesel	**60/70**	-	F 1" - F 1"	0,45	200X170X115
094-5300-100	Diesel	**100/150**	-	F 1" - F 1"	0,95	200X170X115

WATER SEPARATING DELIVERY FILTERS

Water separating cartridge filter. The engines use the diesel delivered by the station, so the filter ensures their protection. It separates and absorbes the water in the delivered diesel.

Art. 094-5250-005 Water separating delivery filter for diesel 70 l/min 5 µ
Inlet-outlet connection F1”

Art. 094-5250-030 Water separating delivery filter for diesel 70 l/min 30 µ
Inlet-outlet connection F1”

Art. 094-5255-125 Delivery filter with stainless steel cartridge for diesel 100 l/min
Inlet-outlet connection F1”
filtering capacity **125 µ**

Art. 094-5320-100 Headboard filter holder
Flow rate 100/150 l/min

Ref.	Fluid	Flow rate	Filtering capacity	Inlet	Weight	Packaging
	type	l/min	µ	BSPG	Kg	mm
094-5250-005	Diesel	**70**	5	F 1” - F 1”	1,70	390X285X140
094-5250-030	Diesel	**70**	30	F 1” - F 1”	1,70	390X285X140
094-5255-125	Diesel	**100**	125	F 1” - F 1”	1,70	390X285X140
094-5320-100	Diesel	**70/100**	-	F 1" - F 1"	1,00	200X170X115

WATER SEPARATING CARTRIDGE DIESEL FOR FILTER

Art. 094-5241-000 Water separating cartridge for diesel /gasoline filter 70 l/min
Dimensions 213x96 mm filtering capacity **30 µ**
Art. 094-5241-006 Water separating cartridge for diesel /gasoline filter 70 l/min
Conf.6 pezzi

Art. 094-5246-000 Water separating cartridge for diesel /gasoline filter 150 l/min
Dimensions 269x128 mm filtering capacity **30 µ**
Art. 094-5246-006 Water separating cartridge for diesel /gasoline filter 150 l/min
Conf.6 pezzi

Art. 094-5249-000 Water separating cartridge for diesel /gasoline filter 105 l/min
Dimensions 100x210 mm filtering capacity **5 µ**
Art. 094-5249-025 Water separating cartridge for diesel /gasoline filter 105 l/min
Dimensions 100x210 mm filtering capacity **25 µ**

Art. 094-5251-005 Impurities paper cartridge for diesel filter 70 l/min
dimensions 75x138 mm filtering capacity **5 µ**

Art. 094-5251-030 Water separating cartridge for diesel filter 70 l/min
dimensions 75x138 mm filtering capacity **30 µ**

Art. 094-5256-125 Stainless steel cartridge for diesel filter 100 l/min
dimensions 75x110 mm filtering capacity **125 µ**

Ref.	Fluid	Flow rate	Filtering capacity	Inlet	Weight	Packaging
	type	l/min	µ	BSPG	Kg	mm
094-5241-000	Diesel	**70**	30	-	0,85	112X112X213
094-5246-000	Diesel	**150**	30	-	1,70	170X170X355
094-5249-000	Diesel	**105**	5	-	1,50	170X170X213
094-5249-025	Diesel	**105**	25	-	1,50	170X170X213
094-5251-005	Diesel	**70**	5	-	0,24	100X100X150
094-5251-030	Diesel	**70**	30	-	0,24	100X100X150
094-5256-125	Diesel	**100**	125	-	0,30	100X100X150

SUCTION HOSE KITS FOR DIESEL

Art. 095-5284-000 Telescopic suction tube with foot valve
495<885 mm lenght
Inlet BSP-G M 1”

Art. 095-5430-020 Suction kit with PVC hose
Spiral PVC hose, Ø 25 2 m lenght
Plastic filter F1” with rubber holder Ø 25
Screw clamps 20x32

Art. 095-5440-020 Suction kit with PVC hose
Spiral PVC hose, Ø 25 2 m lenght
Plastic foot valve F1” with filter
Rubber holder Ø 25 - M 1”
Screw clamps 20x32

Art. 095-5440-040 Suction kit with PVC hose
Spiral PVC hose, Ø 25 4 m lenght
Plastic foot valve F1” with filter
Rubber holder Ø 25 - M 1”
Screw clamps 20x32

Art. 095-5450-020 Suction kit with PVC hose
Spiral PVC hose, Ø 25 2 m lenght
Brass foot valve F1” with stainless steel filter
Rubber holder Ø 25 - M 1”
Screw clamps 20x32

Art. 095-5450-040 Suction kit with PVC hose
Spiral PVC hose, Ø 25 4 m lenght
Brass foot valve F1” with stainless steel filter
Rubber holder Ø 25 - M 1”
Screw clamps 20x32

Art. 912-0600-500 Spiral PVC hose Ø25X33 50 m lenght

Ref.	Hose lenght	Dimensions	Inlet-outlet	Weight
	m	mm	BSPG	Kg
095-5284-000	495<885 mm	25-37	M 1" - F 1"	1,10
095-5430-020	2	25X33	F 1" - F 1"	0,80
095-5440-020	2	25X33	F 1" - F 1"	1,00
095-5440-040	4	25X33	F 1" - F 1"	1,78
095-5450-020	2	25X33	F 1" - F 1"	1,80
095-5450-040	4	25X33	F 1" - F 1"	2,50
912-0600-500	50	25x33	Ø25	11,50

ANTISTATIC RUBBER HOSES FOR DIESEL

Antistatic rubber hose 10 bar with connections

Ref.	Hose Lenght	Ø hose	Dimensions	Inlet-outlet	Weight	Packaging
	m	G	mm	BSPG	Kg	mm
908-0516-020	2	3/4"	19x27	M 1" - M 1"	1,28	400X400X100
908-0516-040	4	3/4"	19x27	M 1" - M 1"	2,66	400X400X100
908-0516-060	6	3/4"	19x27	M 1" - M 1"	3,80	400X400X100
908-0516-080	8	3/4"	19x27	M 1" - M 1"	4,10	400X400X100
908-0516-100	10	3/4"	19x27	M 1" - M 1"	5,34	400X400X150
908-0506-080	8	3/4"	19x27	F 3/4" - M 1"	4,00	400X400X150
908-0506-100	10	3/4"	19x27	F 1" - M 1"	4,87	400X400X150
908-0506-150	15	3/4"	19x27	F 1" - M 1"	7,46	400X400X200
908-0506-200	20	3/4"	19x27	F 1" - M 1"	9,42	400X400X200
908-0506-300	30	3/4"	19x27	F 1" - M 1"	14,73	400X400X250
908-0506-400	40	3/4"	19x27	F 1" - M 1"	19,42	400X400X250

Antistatic rubber hose 10 bar with connections

Ref.	Hose lenght	Ø hose	Dimensions	Inlet-outlet	Weight	Packaging
	m	G	mm	BSPG	Kg	mm
908-0616-020	2	1"	25X35	M 1" - M 1"	1,73	400X400X100
908-0616-040	4	1"	25X35	M 1" - M 1"	3,40	400X400X150
908-0616-060	6	1"	25X35	M 1" - M 1"	4,20	400X400X150
908-0616-100	10	1"	25X35	M 1" - M 1"	8,22	500X500X200
908-0606-100	10	1"	25X35	F 1" - M 1"	8,34	500X500X200
908-0606-150	15	1"	25X35	F 1" - M 1"	12,03	500X500X200
908-0606-200	20	1"	25X35	F 1" - M 1"	15,75	500X500X200
908-0606-300	30	1"	25X35	F 1" - M 1"	23,62	500X500X200

Antistatic rubber hose 10 bar

Ref.	Hose lenght	Ø hose	Dimensions	Inlet-outlet	Weight	Packaging
	m	G	mm	BSPG	Kg	mm
908-0500-600	60	3/4"	19X27	-	24,00	-
908-0600-500	50	1"	25X35	-	33,00	-

ACCESSORIES AND CONNECTIONS FOR HOSES

099-6030-025

099-6020-006

Art. 099-6030-025 Plastic filter with rubber holder Ø 25

Art. 099-6020-006 Plastic foot valve with filter F 1”

R35-0200-006

R18-0821-256

Art. R35-0200-006 Brass foot valve F 1” with stainless steel filter

Art. R18-0821-256 Connection fixed rubber hose M 1” x Ø25 mm

R18-0803-206

R18-0803-256

Art. R18-0803-206 Galvanized steel connection fixed hose M 1” x 20 mm+OR

Art. R18-0803-256 Galvanized steel connection fixed hose M 1” x 25 mm+OR

Art. R18-0855-206 Brass connection fixed hose M 1” x 20 mm+OR
Art. R18-0855-256 Brass connection fixed hose M 1” x 25 mm+OR
Art. R18-0855-307 Brass connection fixed hose M 1.1/4” x Ø30mm
Art. R18-0855-387 Brass connection fixed hose M 1.1/4” x Ø38mm
Art. R18-0855-388 Brass connection fixed hose M 1.1/2” x Ø38mm

Art. R18-1211-006 L shaped elbow 90° F-F1” brass

Art. R18-1210-006 L shaped elbow 90° M-F1” brass

Art. R18-0302-605 Cylindrical nipple 1” x 3/4”

Art. R18-0302-606 Cylindrical nipple 1” x 1”

Art. R18-0502-504 Exagonal bushing M 3/4” - F 1/2”

Art. R18-0502-605 Exagonal bushing M 1” - F 3/4”

Art. F98-0028-030 BPA-free aluminum press bushing 28x30mm
Art. F98-0030-032 BPA-free aluminum press bushing 30x32mm
Art. F98-0036-038 BPA-free aluminum press bushing 36x38mm

Art. 095-5280-609 Quick coupling for pump fixing M 1” - M 2”
with O-ring

Art. F90-1000-030 Aluminium elbow flange 90° F-F 1”
with O-ring

Art. F90-1010-006 Aluminium flange 1” d.80 with
with O-ring

Art. K91-6100-300 Kit of 2 1” Ø80 aluminium flanges
with o-rings and 4 screws

Art. F90-6690-606 Swiveling joint M 1”- F 1”
with O-ring

Art. B27-1120-032 Stainless steel hose clamp F.9 20x32 mm
Art. B27-1125-040 Stainless steel hose clamp F.9 25x40 mm

Art. B27-1132-035 Stainless steel hose clamp F.20 32x35 mm

JERRY CANS FOR FUEL TRANSFER

Steel cans made of cold-laminated steel 0,7mm and 0,8mm, treated to prevent rusting, suitable for fuel and lubricants transfer, external covering standard green color RAL 9007.

Art. 096-3905-000 Painted jerry can 5 l
Color green RAL 9007
Quantity per box: 8 pcs

Art. 096-3910-000 Painted steel jerry can 10 l
Color green RAL 9007
Quantity per box: 5 pcs

Art. 096-3920-000 Painted steel jerry can 20 l
Color green 9007
Quantity per box: 4 pcs

Art. 096-3923-000 Transfer filler with flexible hose
For jerry cans of 5, 10, 20 l

Ref.	Capacity	Quantity for box	Weight	Packaging
	l	Pz.	Kg	mm
096-3905-000	**5**	8	1,60	590X500X290
096-3910-000	**10**	5	3,00	850X360X290
096-3920-000	**20**	4	3,95	690X350X480
096-3923-000	-	1	0,19	-

Suitable for the distribution of the fuel, lubricants and gasoline. They are pre-arranged to be applied directly to the pump tank.

Art. 027-1325-000 Oil and diesel fuel transfer pump
Delivery capacity 0,30 l/stroke
Telescopic shank for 30/220 l barrels

Art. 027-3705-000 Aluminium rotary barrel pump
Delivery capacity 0,27 l/revolution
Shank for 30/220 l barrels
Suitable for diesel, lubricants and gasoline transfer

Art. 027-3710-000 Aluminium rotary barrel pump H.D.
Delivery capacity 80 l/min
With suction hose and 2" adaptor
for the connection to the barrels
Delivery hose 1,80 m lenght
Suitable for diesel, lubricants and gasoline transfer

Ref.	Fluid	Flow rate	Weight	Packaging
	type	l/min	kg	mm
027-1325-000	Diesel	**0,30 stroke**	2,37	500X160X70
027-3705-000	Diesel, gasoline and lubricants	**0,27revolution**	1,87	157X180X365
027-3710-000	Diesel, gasoline and lubricants	**80 l/min**	5,50	310X195X225

FIXED VARNISHED HOSE REELS FOR DIESEL 10 bar

Equipped with:
- **Black antistatic rubber hoses**
- Galvanized steel connections
- Galvanized steel - anodized aluminum 90° swivelling joint
- Viton® seals

F-460

Article	Capacity	L. hose	Ø hose	Inlet-Outlet
070-1308-500	80 l/min	without hose	-	F1"–M3/4"BSP
070-1308-508	80 l/min	8 m	3/4"- 19x27	F1"–M1" BSP

F-550

Article	Capacity	L. hose	Ø hose	Inlet-Outlet
070-1408-600	95 l/min	without hose	-	F1"–M1" BSP
070-1408-510	90 l/min	10 m	3/4" - 19x27	F1"–M1" BSP
070-1408-515	85 l/min	15m	3/4" - 19x27	F1"–M1" BSP
070-1408-610	95 l/min	10m	1" - 25x35	F1"–M1" BSP

F-555

Article	Capacity	L. hose	Ø hose	Inlet-Outlet
070-1508-600	95 l/min	without hose	-	F1"–M1" BSP
070-1508-520	83 l/min	20 m	3/4" - 19x27	F1"–M1" BSP
070-1508-615	90 l/min	15 m	1"- 25x35	F1"–M1" BSP

F-560

Article	Capacity	L. hose	Ø hose	Inlet-Outlet
070-1608-600	95 l/min	without hose	-	F1"–M1" BSP
070-1608-530	80 l/min	30 m	3/4" - 19x27	F1"–M1" BSP
070-1608-540	75 l/min	40 m	3/4" - 19x27	F1"–M1" BSP
070-1608-620	87 l/min	20 m	1"- 25x35	F1"–M1" BSP
070-1608-630	85 l/min	30 m	1"- 25x35	F1"–M1" BSP

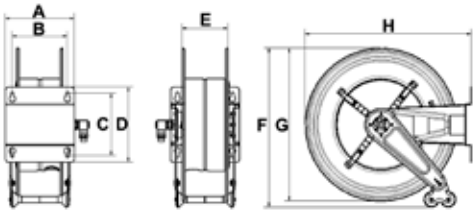

OVERALL DIMENSIONS FIXED VERSION

Mod.	A	B	C	D	E	F	G	H	Kg	m³	№
F-460	158	120	168	192	95	490	460	490	16,50<23,00	0,094	1
F-550	200	150	225	270	120	590	550	600	22,00<45,00	0,130	1
F-555	250	200	225	270	170	590	550	600	26,00<53,00	0,150	1
F-560	440	390	225	270	360	590	550	600	33,00<83,00	0,240	1

SWIVELLING VARNISHED HOSE REELS FOR DIESEL 10 bar

Equipped with:
- **Black antistatic rubber hoses**
- Galvanized steel connections
- Galvanized steel - anodized aluminum 90° swivelling joint
- Viton® seals

S-460

Article	Capacity	L. hose	Ø hose	Inlet-Outlet
071-1308-500	80 l/min	without hose	-	F1"–M3/4" BSP
071-1308-508	80 l/min	8 m	3/4"- 19x27	F1"–M1" BSP

S-550

Article	Capacity	L. hose	Ø hose	Inlet-Outlet
071-1408-600	95 l/min	without hose	-	F1"–M1" BSP
071-1408-510	90 l/min	10 m	3/4"- 19x27	F1"–M1" BSP
071-1408-515	85 l/min	15m	3/4"- 19x27	F1"–M1" BSP
071-1408-610	95 l/min	10m	1" - 25x35	F1"–M1" BSP

S-555

Article	Capacity	L. hose	Ø hose	Inlet-Outlet
071-1508-600	95 l/min	without hose	-	F1"–M1" BSP
071-1508-520	83 l/min	20 m	3/4"- 19x27	F1"–M1" BSP
071-1508-615	90 l/min	15 m	1"- 25x35	F1"–M1" BSP

OVERALL DIMENSIONS SWIVELLING VERSION

Mod.	A	B	C	D	E	F	G	H	Kg	m³	Nº
S-460	150	120	168	196	95	490	460	575	17,50<24,00	0,094	1
S-550	200	150	225	270	120	572	550	680	23,00<45,00	0,130	1
S-555	250	200	225	270	170	572	550	680	27,00<54,00	0,150	1

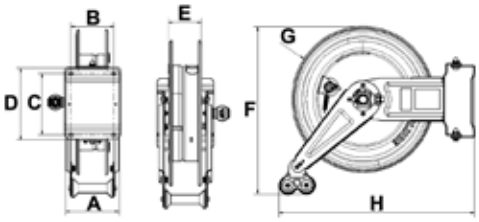

FIXED STAINLESS STEEL HOSE REELS FOR DIESEL 10 bar

Equipped with:
- **Black antistatic rubber hoses**
- Galvanized steel connections
- Galvanized steel - anodized aluminum 90° swivelling joint
- Viton® seals

FX-460

Article	Capacity	L. hose	Ø hose	Inlet-Outlet
070-2308-500	80 l/min	without hose	-	F1”–M3/4”BSP
070-2308-508	80 l/min	8 m	3/4”- 19x27	F1”–M1” BSP

FX-550

Article	Capacity	L. hose	Ø hose	Inlet-Outlet
070-2408-600	95 l/min	without hose	-	F1”–M1” BSP
070-2408-510	90 l/min	10 m	3/4"- 19x27	F1”–M1” BSP
070-2408-515	85 l/min	15m	3/4"- 19x27	F1”–M1” BSP
070-2408-610	95 l/min	10m	1” - 25x35	F1”–M1” BSP

FX-555

Article	Capacity	L. hose	Ø hose	Inlet-Outlet
070-2508-600	95 l/min	without hose	-	F1”–M1” BSP
070-2508-520	83 l/min	20 m	3/4"- 19x27	F1”–M1” BSP
070-2508-615	90 l/min	15 m	1"- 25x35	F1”–M1” BSP

FX-560

Article	Capacity	L. hose	Ø hose	Inlet-Outlet
070-2608-600	95 l/min	without hose	-	F1”–M1” BSP
070-2608-530	80 l/min	30 m	3/4"- 19x27	F1”–M1” BSP
070-2608-540	75 l/min	40 m	3/4"- 19x27	F1”–M1” BSP
070-2608-620	87 l/min	20 m	1”- 25x35	F1”–M1” BSP
070-2608-630	85 l/min	30 m	1”- 25x35	F1”–M1” BSP

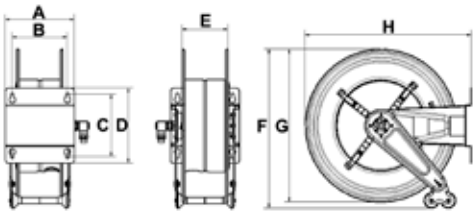

OVERALL DIMENSIONS FIXED VERSION

Mod.	A	B	C	D	E	F	G	H	Kg	m³	№
FX-460	158	120	168	192	95	490	460	490	16,50<23,00	0,094	1
FX-550	200	150	225	270	120	590	550	600	22,00<45,00	0,130	1
FX-555	250	200	225	270	170	590	550	600	26,00<53,00	0,150	1
FX-560	440	390	225	270	360	590	550	600	33,00<83,00	0,240	1

SWIVELLING STAINLESS STEEL HOSE REELS FOR DIESEL 10 bar

Equipped with:
- **Black antistatic rubber hoses**
- Galvanized steel connections
- Galvanized steel - anodized aluminum 90° swivelling joint
- Viton® seals

SX-460

Article	Capacity	L. hose	Ø hose	Inlet-Outlet
071-2308-500	80 l/min	without hose	-	F1”–M3/4” BSP
071-2308-508	80 l/min	8 m	3/4”- 19x27	F1”–M1” BSP

SX-550

Article	Capacity	L. hose	Ø hose	Inlet-Outlet
071-2408-600	95 l/min	without hose	-	F1”G–M1” BSP
071-2408-510	90 l/min	10 m	3/4"- 19x27	F1”–M1” BSP
071-2408-515	85 l/min	15m	3/4"- 19x27	F1”–M1” BSP
071-2408-610	95 l/min	10m	1” - 25x35	F1”–M1” BSP

SX-555

Article	Capacity	L. hose	Ø hose	Inlet-Outlet
071-2508-600	95 l/min	without hose	-	F1”–M1” BSP
071-2508-520	83 l/min	20 m	3/4"- 19x27	F1”–M1” BSP
071-2508-615	90 l/min	15 m	1"- 25x35	F1”–M1” BSP

OVERALL DIMENSIONS SWIVELLING VERSION

Mod.	A	B	C	D	E	F	G	H	Kg	m³	Nº
SX-460	150	120	168	196	95	490	460	575	17,50<24,00	0,094	1
SX-550	200	150	225	270	120	572	550	680	23,00<45,00	0,130	1
SX-555	250	200	225	270	170	572	550	680	27,00<54,00	0,150	1

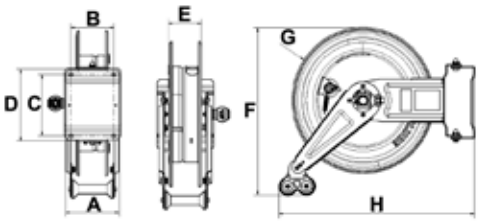

FIXED MANUAL HOSE REELS IN PAINTED STEEL FOR DIESEL HOSES 10 bar

Equipped with:
- Galvanized steel connections
- Galvanized steel - anodized aluminium 90° swivelling joint
- Viton® seals
- Revolving flick folding handgrip

FM-460

Article	Equipped	Hose reel capacity	Inlet-Outlet
077-1308-500	without hose	Ø 3/4" - max 8 m	F1"–M3/4"BSP

FM-550

Article	Equipped	Hose reel capacity	Inlet-Outlet
077-1408-600	without hose	Ø 3/4" - max 15 m	F1"–M1" BSP
077-1408-600	without hose	Ø 1" - max 10 m	F1"–M1" BSP

FM-555

Article	Equipped	Hose reel capacity	Inlet-Outlet
077-1508-600	without hose	Ø 3/4" - max 20 m	F1"–M1" BSP
077-1508-600	without hose	Ø 1" - max 15 m	F1"–M1" BSP

FM-560

Article	Equipped	Hose reel capacity	Inlet-Outlet
077-1608-600	without hose	Ø 3/4" - max 40 m	F1"–M1" BSP
077-1608-600	without hose	Ø 1" - max 30 m	F1"–M1" BSP

OVERALL DIMENSIONS

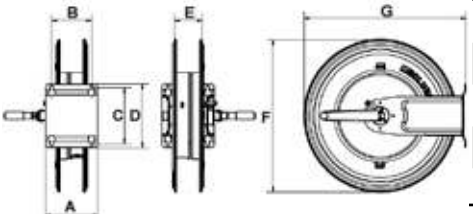

Mod.	A	B	C	D	E	F	G	Kg	m³	№
FM-460	158	120	168	192	95	460	500	11,00<11,00	0,084	1
FM-550	200	150	225	270	120	550	600	15,90<15,90	0,094	1
FM-555	250	200	225	270	170	550	600	17,32<17,32	0,130	1
FM-560	440	390	225	270	360	550	600	25,90<25,90	0,150	1

FIXED MANUAL HOSE REELS IN AISI 304 STAINLESS STEEL FOR DIESEL 10 bar

Equipped with:
- **AISI 316 stainless steel** connections
- Galvanized steel - anodized aluminium 90° swivelling joint
- Viton® seals
- **AISI 304 stainless steel** revolving flick folding handgrip

FMX-460

Article	Equipped	Hose reel capacity	Inlet-Outlet
077-2308-500	without hose	Ø 3/4" - max 8 m	F1"–M3/4" BSP

FMX-550

Article	Equipped	Hose reel capacity	Inlet-Outlet
077-2408-600	without hose	Ø 3/4" - max 15 m	F1"–M1" BSP
077-2408-600	without hose	Ø 1" - max 10 m	F1"–M1" BSP

FMX-555

Article	Equipped	Hose reel capacity	Inlet-Outlet
077-2508-600	without hose	Ø 3/4" - max 20 m	F1"–M1" BSP
077-2508-600	without hose	Ø 1" - max 15 m	F1"–M1" BSP

FMX-560

Article	Equipped	Hose reel capacity	Inlet-Outlet
077-2608-600	without hose	Ø 3/4" - max 40 m	F1"–M1" BSP
077-2608-600	without hose	Ø 1" - max 30 m	F1"–M1" BSP

OVERALL DIMENSIONS

Mod.	A	B	C	D	E	F	G	Kg	m³	№
FMX-460	158	120	168	192	95	460	500	10,71<10,80	0,094	1
FMX-550	200	150	225	270	120	550	600	15,96<16,33	0,130	1
FMX-555	250	200	225	270	170	550	600	17,22<17,83	0,150	1
FMX-560	440	390	225	270	360	550	600	25,75<26,38	0,240	1

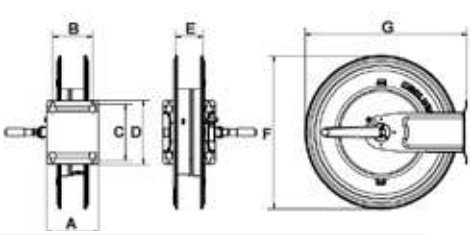

AUTOMATIC HOSE REELS IN PAINTED STEEL SERIES HEAVY - DUTY FOR DIESEL 10 bar

Equipped with:
- **Black antistatic rubber hoses**
- Galvanized steel connections
- Galvanized steel - anodized aluminium 90° swivelling joint
- Viton® seals

HD-460

Article	Capacity	L. hose	Ø hose	Inlet-Outlet
073-1308-500	80 l/min	without hose	-	F1"–M3/4"BSP
073-1308-508	80 l/min	8 m	3/4"- 19x27	F1"– M1"BSP

HD-550

Article	Capacity	L. hose	Ø hose	Inlet-Outlet
073-1408-600	95 l/min	without hose	-	F1"–M1" BSP
073-1408-510	90 l/min	10 m	3/4"- 19x27	F1"–M1" BSP
073-1408-515	85 l/min	15 m	3/4"- 19x27	F1"–M1" BSP
073-1408-610	95 l/min	10 m	1" - 25x35	F1"–M1" BSP

HD-555

Article	Capacity	L. hose	Ø hose	Inlet-Outlet
073-1508-600	95 l/min	without hose	-	F1"–M1" BSP
073-1508-520	83 l/min	20 m	3/4"- 19x27	F1"–M1" BSP
073-1508-615	90 l/min	15 m	1" - 25x35	F1"–M1" BSP

HD-560

Article	Capacity	L. hose	Ø hose	Inlet-Outlet
073-1608-600	95 l/min	without hose	-	F1"–M1" BSP
073-1608-530	80 l/min	30 m	3/4"- 19x27	F1"–M1" BSP
073-1608-540	75 l/min	40 m	3/4"- 19x27	F1"–M1" BSP
073-1608-620	87 l/min	20 m	1" - 25x35	F1"–M1" BSP
073-1608-630	85 l/min	30 m	1" - 25x35	F1"–M1" BSP

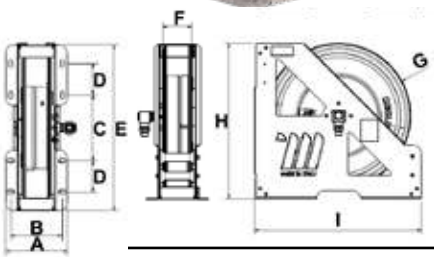

OVERALL DIMENSIONS

Mod.	A	B	C	D	E	F	G	H	I	Kg	m³	Nº
HD-460	196	163	209	100	529	95	460	495	534	23,28<26,78	0,072	1
HD-550	230	197	324	100	644	120	550	597	649	40,10<47,35	0,120	1
HD-555	280	247	324	100	644	170	550	597	649	51,50<62,53	0,145	1
HD-560	460	427	324	100	644	350	550	597	649	60,90<83,02	0,230	1

AUTOMATIC HOSE REELS IN AISI 304 STAINLESS STEEL SERIES HEAVY - DUTY FOR DIESEL 10 bar

Equipped with:
- **Black antistatic rubber hoses**
- Galvanized steel connections
- Galvanized steel - anodized aluminum 90° swivelling joint
- Viton® seals

HDX-460

Article	Capacity	L. hose	Ø hose	Inlet-Outlet
073-2308-500	80 l/min	without hose	-	F1"–M3/4"BSP
073-2308-508	80 l/min	8 m	3/4"- 19x27	F1"–M1" BSP

HDX-550

Article	Capacity	L. hose	Ø hose	Inlet-Outlet
073-2408-600	95 l/min	without hose	-	F1"–M1" BSP
073-2408-510	90 l/min	10 m	3/4"- 19x27	F1"–M1" BSP
073-2408-515	85 l/min	15 m	3/4"- 19x27	F1"–M1" BSP
073-2408-610	95 l/min	10 m	1" - 25x35	F1"–M1" BSP

HDX-555

Article	Capacity	L. hose	Ø hose	Inlet-Outlet
073-2508-600	95 l/min	without hose	-	F1"–M1" BSP
073-2508-520	83 l/min	20 m	3/4"- 19x27	F1"–M1" BSP
073-2508-615	90 l/min	15 m	1" - 25x35	F1"–M1" BSP

HDX-560

Article	Capacity	L. hose	Ø hose	Inlet-Outlet
073-2608-600	95 l/min	without hose	-	F1"–M1" BSP
073-2608-530	80 l/min	30 m	3/4"- 19x27	F1"–M1" BSP
073-2608-540	75 l/min	40 m	3/4"- 19x27	F1"–M1" BSP
073-2608-620	87 l/min	20 m	1" - 25x35	F1"–M1" BSP
073-2608-630	85 l/min	30 m	1" - 25x35	F1"–M1" BSP

OVERALL DIMENSIONS

Mod.	A	B	C	D	E	F	G	H	I	Kg	m³	№
HDX-460	196	163	209	100	529	95	460	495	534	23,28<26,78	0,072	1
HDX-550	230	197	324	100	644	120	550	597	649	40,10<47,35	0,120	1
HDX-555	280	247	324	100	644	170	550	597	649	51,50<62,53	0,145	1
HDX-560	460	427	324	100	644	350	550	597	649	60,90<83,02	0,230	1

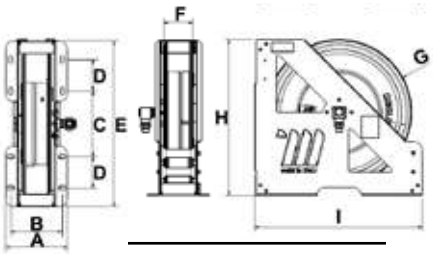

AUTOMATIC INDUSTRIAL SPRING HOSE REEL IN PAINTED STEEL FA-600 SERIES

Automatic auto-retractable hose reel in painted steel, designed for applications which require solid equipment, also on vehicles.
It is suitable for flexible hoses of maximum Ø of 1.1/2'' for the distribution of compressed air, oil and similar fluids, fuels.
They can have two different hose output positions: superior and inferior.

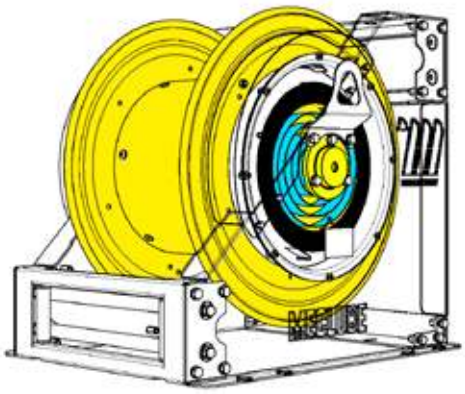

FA-600

For diesel 10 bar

Equipped with:
- Black antistatic synthetic rubber hoses steel wire helix with high strength syntetic textile plies, copper wire
- Galvanized steel connections
- Anodized aluminium swivelling joint
- Viton® seals

Article	L. hose	Ø hose	Max pressure	Inlet-Outlet
076-6108-800	without hose	-	20 bar	F1.1/2"–F1.1/2" BSP
076-6108-815	15 m	1.1/2"	10 bar	F1.1/2"–M1.1/2" BSP

OVERALL DIMENSIONS

Mod.	A	B	C	D	E	F	G	H	I	J	Kg	m³	N°
FA-600	660	725	600	530	100	350	550	330	575	680	120,8<133,8	0,910	1

H

I J

Automatic auto-retractable hose reel in painted steel, designed for applications which require solid equipment, also on vehicles.
It is suitable for flexible hoses of maximum Ø of 1.1/2'' for the distribution of compressed air, oil and similar fluids, fuels. They can have two different hose output positions: superior and inferior.

INDUSTRIAL HOSE REELS Mod. 600

The motorized and manual industrial hose reels are designed for applications that require robust equipment, also on trucks. They are suitable for flexible hoses with big diameters for the distribution of compressed air, water, oil and similar, grease, diesel.

- MOTORIZED 12-24V DC ELECTRIC WITH REDUCER

The unwinding of the hose is manual while the rolling process is through the electric motor (12-24V DC).
It can be connected to a battery or to a power transformer connected to the 230V network.

- MOTORIZED 230-115V AC ELECTRIC WITH REDUCER

The unwinding of the hose is manual while the rolling process is through the electric motor (230-115 AC).
It has to be connected to the 230-115V AC electric network.

- MOTORIZED HYDRAULIC

The unwinding of the hose is manual while the rolling process is through the hydraulic motor.
It has to be connected to a specific control unit equipped with electric motor, hydraulic oil tank and to a command-and-control system with lever for the rolling process.

- MOTORIZED PNEUMATIC

The unwinding of the hose is manual while the rolling process is through the pneumatic motor.
It has to be connected to the compressed air supply and to a pressure regulator that allows to adjust the rolling power and speed.

- MANUAL

The unwinding of the hose is manual, while the rolling process is through the practical revolving crank.
Resulting in a valid and economical solution to the problem of flexible hoses.

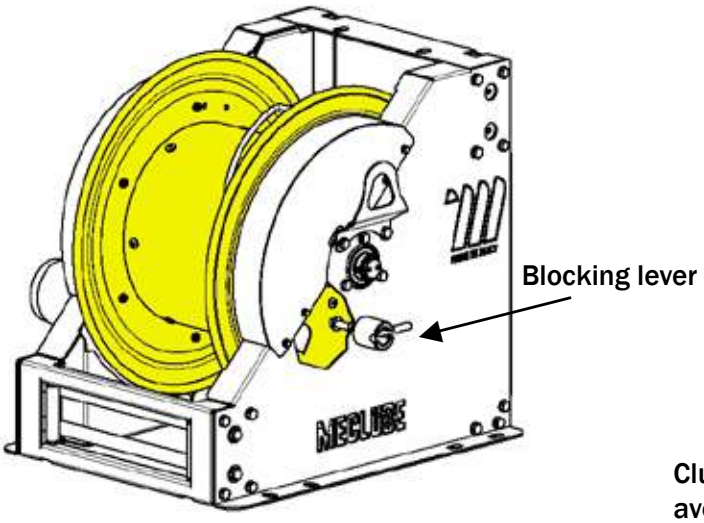

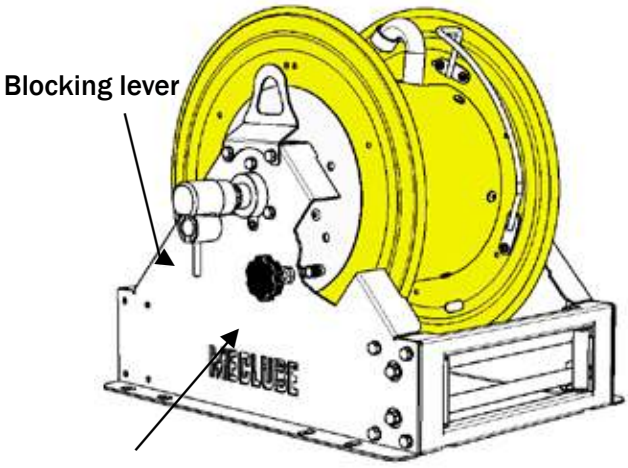

Clutch to regulate the hose unwinding and to avoid the reel to rotate loosely by inertia.

INDUSTRIAL HOSE REELS IN PAINTED STEEL MOTORIZED 12-24V DC 230-115V AC ELECTRIC Mod. FE-600

FE-601

For diesel 20 bar

Equipped with:
- Brass swivelling joint - Viton® seals
- **Electric 12V DC motor** 430W power

Article	Model	Internal reel width	Inlet-Outlet
076-6112-600	**FE-601**	330 mm	F1”- F1” BSP
076-6212-600	**FE-602**	440 mm	F1”- F1” BSP
076-6312-600	**FE-603**	550 mm	F1”- F1” BSP

FE-602

For diesel 20 bar

Equipped with:
- Brass swivelling joint - Viton® seals
- **Electric 24V DC motor** 448W power

Article	Model	Internal reel width	Inlet-Outlet
076-6122-600	**FE-601**	330 mm	F1”- F1” BSP
076-6222-600	**FE-602**	440 mm	F1”- F1” BSP
076-6322-600	**FE-603**	550 mm	F1”- F1” BSP

FE-603

For diesel 20 bar

Equipped with:
- Brass swivelling joint - Viton® seals
- **Electric 230V AC motor** 402W power

Article	Model	Internal reel width	Inlet-Outlet
076-6132-600	**FE-601**	330 mm	F1”- F1” BSP
076-6232-600	**FE-602**	440 mm	F1”- F1” BSP
076-6332-600	**FE-603**	550 mm	F1”- F1” BSP

For diesel 20 bar

Equipped with:
- Brass swivelling joint - Viton® seals
- **Electric 115V AC motor** potenza 441W power

Article	Model	Internal reel width	Inlet-Outlet
076-6152-600	**FE-601**	330 mm	F1”- F1” BSP
076-6252-600	**FE-602**	440 mm	F1”- F1” BSP
076-6352-600	**FE-603**	550 mm	F1”- F1” BSP

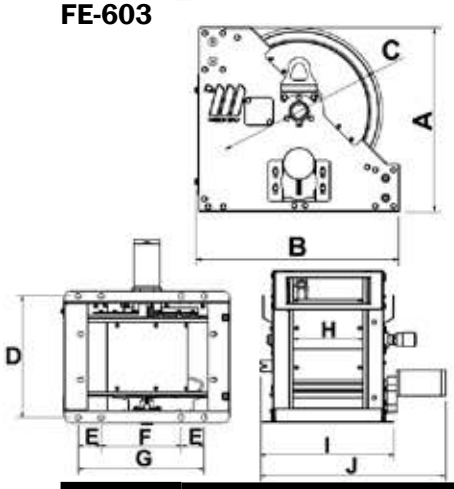

Hose reel capacity

1/2”	20 mm	**50 m**	**100 m**	**200 m**
3/4”	27 mm	**30 m**	**60 m**	**90 m**
1”	34 mm	**20 m**	**40 m**	**60 m**

Overall dimensions

Model	A	B	C	D	E	F	G	H	I	J	Weight	Packaging
FE-601	660	733	600	530	100	350	550	330	580	810	114 kg	800X1200X950 mm
FE-602	660	733	600	640	100	350	550	440	690	920	119 kg	800X1200X950 mm
FE-603	660	733	600	750	100	350	550	550	800	1030	124 kg	800X1200X950 mm

INDUSTRIAL HOSE REELS IN PAINTED STEEL MOTORIZED HYDRAULIC Mod. FI-600 PNEUMATIC Mod. FP-600 MANUAL Mod. FM-600

For diesel 20 bar

Equipped with:
- Brass swivelling joint - Viton® seals
- **Hydraulic motor**

Article	Model	Internal reel width	Inlet-Outlet
076-6162-600	**FI-601**	330 mm	F1”- F1” BSP
076-6262-600	**FI-602**	440 mm	F1”- F1” BSP
076-6362-600	**FI-603**	550 mm	F1”- F1” BSP

FI-601

For diesel 20 bar

Equipped with:
- Brass swivelling joint - Viton® seals
- **Pneumatic motor**

Article	Model	Internal reel width	Inlet-Outlet
076-6172-600	**FI-601**	330 mm	F1”- F1” BSP
076-6272-600	**FI-602**	440 mm	F1”- F1” BSP
076-6372-600	**FI-603**	550 mm	F1”- F1” BSP

FI-602

For diesel 20 bar

Equipped with:
- Brass swivelling joint - Viton® seals
- **Manual with crank**

Article	Model	Internal reel width	Inlet-Outlet
076-6192-600	**FM-601**	330 mm	F1”- F1” BSP
076-6292-600	**FM-602**	440 mm	F1”- F1” BSP
076-6392-600	**FM-603**	550 mm	F1”- F1” BSP

FM-603

Manual series

J I

Hose reel capacity

Ø Hose	Ø external Hose	Mod.FM-601	Mod.FM-602	Mod.FM-603
1/2”	20 mm	**50 m**	**100 m**	**200 m**
3/4”	27 mm	**30 m**	**60 m**	**90 m**
1”	34 mm	**20 m**	**40 m**	**60 m**

H

I J

Overall dimensions

Model	A	B	C	D	E	F	G	H	I	J	Weight	Packaging
FP-601	660	733	600	530	100	350	550	330	580	680	110 kg	800X1200X950 mm
FP-602	660	733	600	640	100	350	550	440	690	790	115 kg	800X1200X950 mm
FP-603	660	733	600	750	100	350	550	550	800	900	119 kg	800X1200X950 mm

INDUSTRIAL HOSE REELS Mod. 700

The motorized industrial hose reels are designed for applications that require robust equipment, also on trucks. They are suitable for flexible hoses with big diameters for the distribution of compressed air, water, oil and similar, grease, diesel.

- MOTORIZED 12-24V DC ELECTRIC

The unwinding of the hose is manual while the rolling process is through the electric motor (12-24V DC).
It can be connected to a battery or to a power transformer connected to the 230V network.

- MOTORIZED 230-115V AC ELECTRIC

The unwinding of the hose is manual while the rolling process is through the electric motor (230-115 AC).
It has to be connected to the 230-115V AC electric network.

- MOTORIZED HYDRAULIC

The unwinding of the hose is manual while the rolling process is through the hydraulic motor.
It has to be connected to a specific control unit equipped with electric motor, hydraulic oil tank and to a command-and-control system with lever for the rolling process.

- MOTORIZED PNEUMATIC

The unwinding of the hose is manual while the rolling process is through the pneumatic motor. It has to be
connected to the compressed air supply and to a pressure regulator that allows to adjust the rolling power and speed.

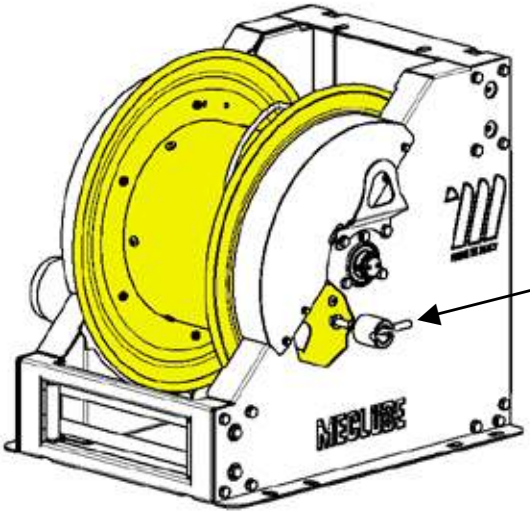

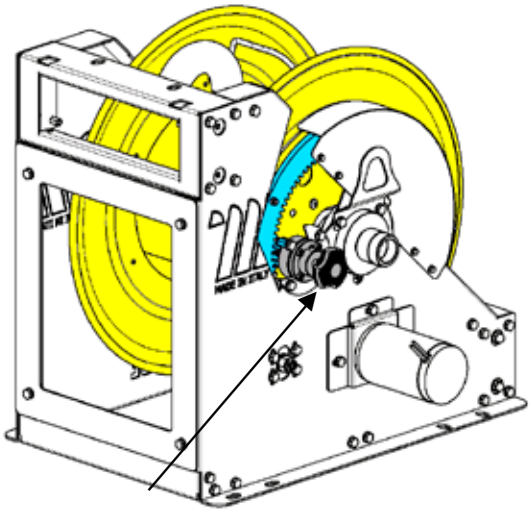

Clutch to regulate the hose unwinding and to avoid the reel to rotate loosely by inertia.

INDUSTRIAL HOSE REELS Mod. 700

New series of motorized industrial hose reels Mod.700
They are supplied with reel Ø 700 with 3 different widths: 330, 440, 550 mm
2''F swivelling joint with pressures of 20 and 250 bar. The main difference is the type of motorization:
- Electric 12V - 24V - 230V - 115V
- Hydraulic
- Pneumatic

They are designed for applications that require robust equipment, also on trucks.
They are suitable for flexible hoses with maximum Ø of 2", for the distribution of compressed air, oil and similar, diesel.
They are designed to have two different hose exit positions, an upper and a lower one.

Motorized chain transmission with double sprocket

INDUSTRIAL HOSE REELS IN PAINTED STEEL MOTORIZED 12-24V DC 230-115V AC ELECTRIC Mod. FE-700

FE-701

FE-702

FE-703

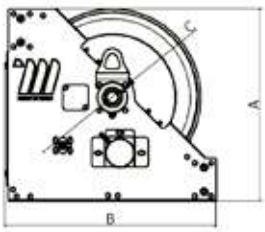

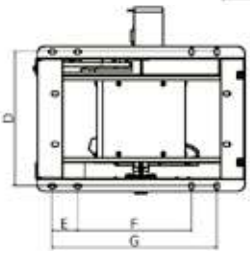

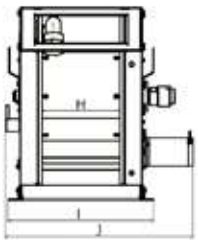

For diesel 20 bar

Equipped with:
- Anodized aluminium swivelling joint - Viton® seals
- **Electric 12V DC motor** 449W power

Article	Model	Internal reel width	Inlet-Outlet
076-7112-900	**FE-701**	330 mm	F2”- F2” BSP
076-7212-900	**FE-702**	440 mm	F2”- F2” BSP
076-7312-900	**FE-703**	550 mm	F2”- F2” BSP

For air-water and diesel 20 bar

Equipped with:
- Anodized aluminium swivelling joint - Viton® seals
- **Electric 24V DC motor** 457W power

Article	Model	Internal reel width	Inlet-Outlet
076-7122-900	**FE-701**	330 mm	F2”- F2” BSP
076-7222-900	**FE-702**	440 mm	F2”- F2” BSP
076-7322-900	**FE-703**	550 mm	F2”- F2” BSP

For diesel 20 bar

Equipped with:
- Anodized aluminium swivelling joint - Viton® seals
- **Electric 230V AC motor** 448W power

Article	Model	Internal reel width	Inlet-Outlet
076-7132-900	**FE-701**	330 mm	F2”- F2” BSP
076-7232-900	**FE-702**	440 mm	F2”- F2” BSP
076-7332-900	**FE-703**	550 mm	F2”- F2” BSP

For diesel 20 bar

Equipped with:
- Anodized aluminium swivelling joint - Viton® seals
-**Electric 115V AC motor** 451W power

Article	Model	Internal reel width	Inlet-Outlet
076-7152-900	**FE-701**	330 mm	F2”- F2” BSP
076-7252-900	**FE-702**	440 mm	F2”- F2” BSP
076-7352-900	**FE-703**	550 mm	F2”- F2” BSP

Hose reel capacity

Ø Hose	Ø external Hose	Mod.FE-701	Mod.FE-702	Mod.FE-703
1.1/4”	43 mm	**35 m**	**45 m**	**60 m**
1.1/2”	50 mm	**20 m**	**30 m**	**50 m**
2”	63 mm	**15 m**	**25 m**	**30 m**

Overall dimensions

Model	A	B	C	D	E	F	G	H	I	J	Weight	Packaging
FE-701	760	833	700	531	100	450	650	330	574	734	122 kg	800X1200X950 mm
FE-702	760	833	700	641	100	450	650	440	684	844	140 kg	1000X1200X950 mm
FE-703	760	833	700	751	100	450	650	550	794	954	155 kg	1000X1200X950 mm

INDUSTRIAL HOSE REELS IN PAINTED STEEL
MOTORIZED HYDRAULIC Mod. FI-700
PNEUMATIC Mod. FP-700

For diesel 20 bar

Equipped with:
- Anodized aluminium swivelling joint
- Viton® seals
- **Hydraulic motor**

Article	Model	Internal reel width	Inlet-Outlet
076-7162-900	**FI-701**	330 mm	F2”- F2” BSP
076-7262-900	**FI-702**	440 mm	F2”- F2” BSP
076-7362-900	**FI-703**	550 mm	F2”- F2” BSP

FI-701

For diesel 20 bar

Equipped with:
- Anodized aluminium swivelling joint
- Viton® seals
- **Pneumatic motor**

Article	Model	Internal reel width	Inlet-Outlet
076-7172-900	**FP-701**	330 mm	F2”- F2” BSP
076-7272-900	**FP-702**	440 mm	F2”- F2” BSP
076-7372-900	**FP-703**	550 mm	F2”- F2” BSP

FP-702

Hose reel capacity

Ø Hose	Ø external Hose	Mod.FE-701	Mod.FE-702	Mod.FE-703
1.1/4”	43 mm	**35 m**	**45 m**	**60 m**
1.1/2”	50 mm	**20 m**	**30 m**	**50 m**
2”	63 mm	**15 m**	**25 m**	**30 m**

FP-703

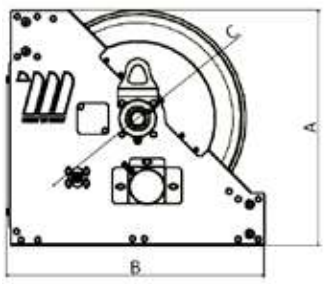

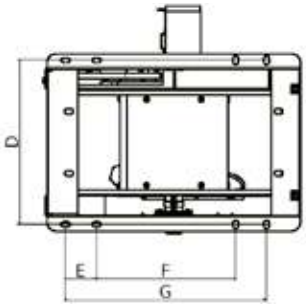

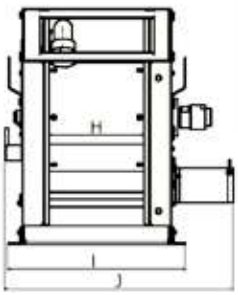

Overall dimensions

Model	A	B	C	D	E	F	G	H	I	J	Weight	Packaging
FE-701	760	833	700	531	100	450	650	330	574	734	122 kg	800X1200X950 mm
FE-702	760	833	700	641	100	450	650	440	684	844	140 kg	1000X1200X950 mm
FE-703	760	833	700	751	100	450	650	550	794	954	155 kg	1000X1200X950 mm

QUICK CONNECTORS "Camlock"

Stainless Steel Camlock Fitting Male BSP Female Thread

Article	Dimensions	Thread	Flow rate	Temperature	Packaging
	inch		bar	max °C	Pieces
R50-1100-004	DN12 - **1/2"**	BSP Type A	10	60°C	5
R50-1100-005	DN 20 - **3/4"**	BSP Type A	10	60°C	5
R50-1100-006	DN 25 - **1"**	BSP Type A	17	60°C	1
R50-1100-008	DN 40 - **1.1/2"**	BSP Type A	17	60°C	1
R50-1100-009	DN 50 - **2"**	BSP Type A	17	60°C	1

Stainless Steel Camlock Fitting Female BSP Female Thread

Article	Dimensions	Thread	Flow rate	Temperature	Packaging
	inch		bar	max °C	Pieces
R50-1200-004	DN12 - **1/2"**	BSP Type D	10	60°C	5
R50-1200-005	DN 20 - **3/4"**	BSP Type D	10	60°C	5
R50-1200-006	DN 25 - **1"**	BSP Type D	17	60°C	1
R50-1200-008	DN 40 - **1.1/2"**	BSP Type D	17	60°C	1
R50-1200-009	DN 50 - **2"**	BSP Type D	17	60°C	1

Diesel fuel hose

Article	Tube length	Dimensions	Inlet-outlet	Pressure	Weight
	m	mm	BSPG	bar	Kg
919-0818-100	10	1.1/2"	M 1.1/2"-M 1.1/2"	20	9,00
919-0818-150	15	1.1/2"	M 1.1/2"-M 1.1/2"	20	13,50
919-0818-200	20	1.1/2"	M 1.1/2"-M 1.1/2"	20	18,00

PVC spiral suction hose kit with foot valve

Article	Tube length	Dimensions	Inlet-outlet	Weight
	m	mm	BSPG	Kg
095-5457-020	2	30x40	M1.1/4"-M 1.1/4"	6,00
095-5457-040	4	30x40	M1.1/4"-M 1.1/4"	9,00