ElecTo

ELECTO MVM

ELECTRONIC VOLUMETRIC METER

ElecTo MVM is a rotary piston meter for domestic water, featuring an innovative multiprotocol radio electronic register. Robust, durable, suitable for the most challenging environments and types of installation. Its low starting flow rate and its wide measuring range provide excellent consumption accounting. Its large LCD display makes it very easy to read, while providing additional information to both users and operators. ElecTo MVM offers the maximum short and long distance data communication flexibility, and can be used with both mobile and fixed reading systems.

maddalena®

METERING EXPERTISE

ELECTO MVM

FEATURES

- Electronic volumetric rotary piston meter
- Ideal for utilities and outdoor installation
- MID: R MAX 800
- DN: 15 to 20
- Health certifications available for a number of countries
- Rotating register with IP68 rating
- Datalogging with a storage capacity of over 11,000 values
- Integrated wM–Bus, OMS and/or LoRaWAN radio
- Optimized antenna for maximum radio range
- Lithium battery with a minimum life of 13 years in dual mode (varies depending on the configuration chosen)
- Fault detection: fraud, probable leak, overconsumption, reverse flow, blocked meter and reversed meter
- Programming and testing kit available upon request

TYPICAL ERROR CURVE

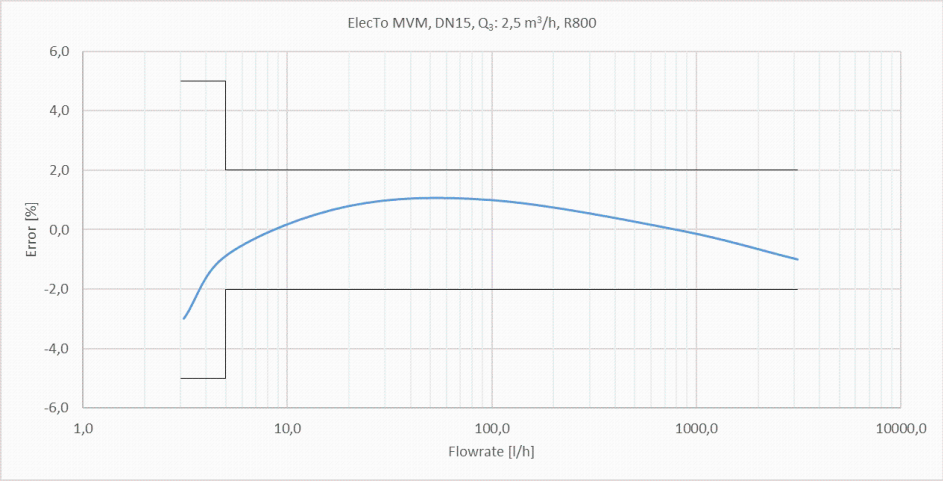

HEAD LOSS DIAGRAM

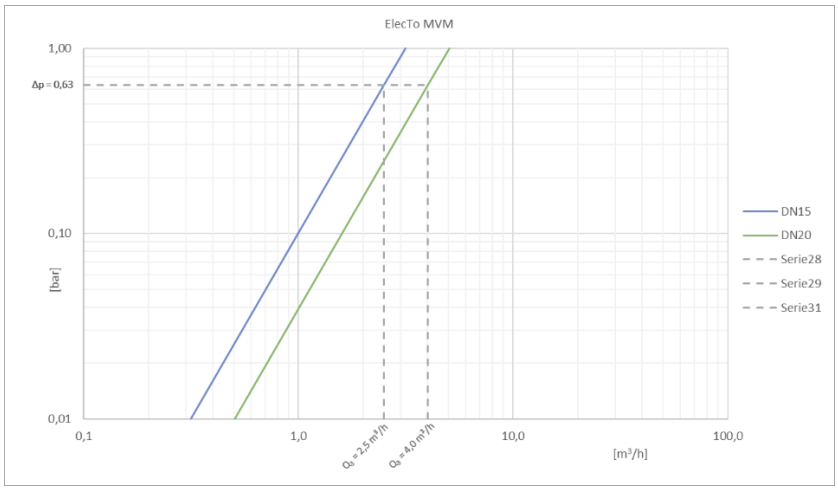

METROLOGICAL PERFORMANCE

Size	**mm**	15	20
	in	½	¾

Module B no.		TCM 142/10-4742	
Module D no.		0119-SJ-A010-08	
Q_3/Q_1 = R **Referred to installation position**		Tutte ≤ 800	
MID standard performance *			
Q_3	**m^3/h**	2,5	4
Q_4	**m^3/h**	3,13	5
R		**400**	
Q_1	**l/h**	6,25	10
Q_2	**l/h**	10	16

* Other values of R available upon request.

TECHNICAL DATA

Maximum permissible error between Q_1 and Q_2 (excluded)		+/- 5%	
Maximum permissible error between Q_2 (included) and Q_4		+/- 2% with water temperature ≤ 30°C +/- 3% with water temperature > 30°C	
Temperature class		T30,T50	
Flow profile sensitivity classes		U0 - D0	
Starting flow rate	**l/h**	0,5	1
Head loss		ΔP63	
Nominal pressure	**bar**	16	
Maximum reading	**m^3**	999.999	
Minimum reading	**l**	1	
Indicative weight	**kg**	0,89	1,116

DIMENSIONS

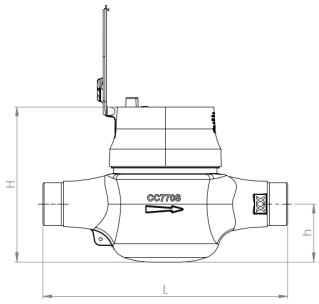

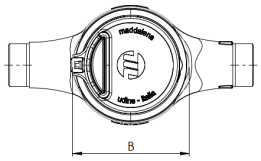

Size	**mm**	15	20
	in	½	¾

Thread	**in**	G ¾ B	1 B
L	**mm**	110	130/190
H	**mm**	120	126
h	**mm**	37	44
B	**mm**	89	92

COMMUNICATION MODULES

MULTI

For more information on all the accessories available, consult the specific technical data sheets on the website www.maddalena.it